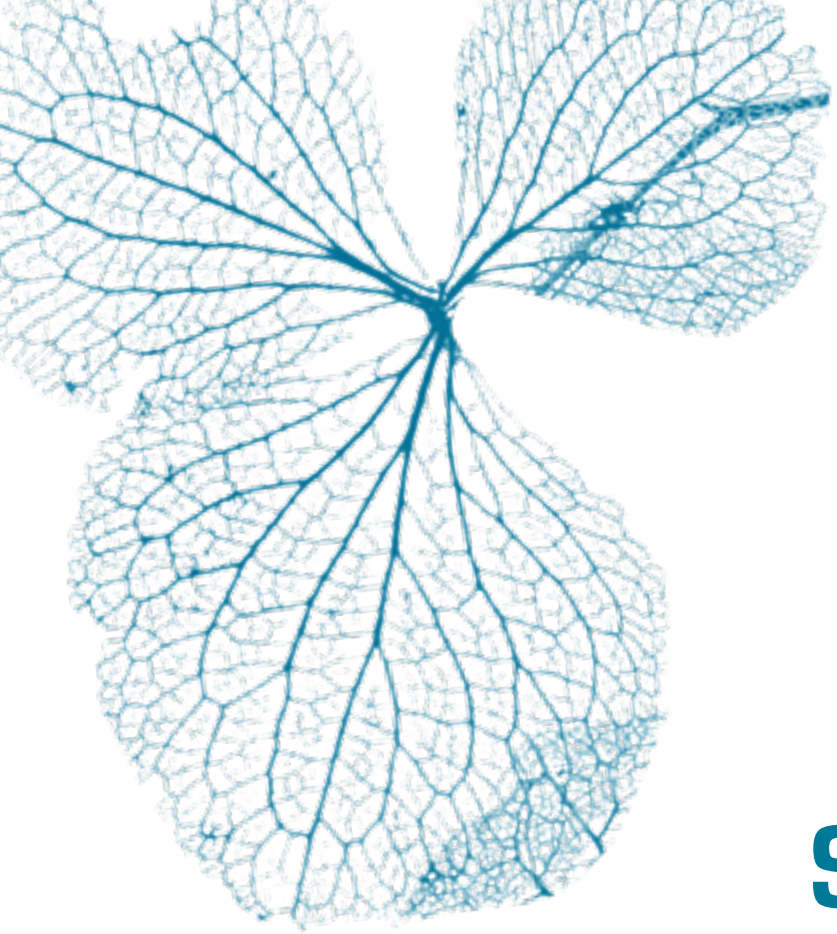

# SANHUA

## STANDARD PRODUCT

Catalogue

*Air conditioning*

*Commercial refrigeration*

*Heat Pump*

# *"Strive for perfection*
# ***Pursuit of excellence"***

Sanhua is a leading HVAC&R manufacturer of controls and components with a global footprint and 40 years of experience. Our cooperation with the largest companies in the Automotive, Appliance and HVAC&R industry makes Sanhua a leading worldwide OEM supplier providing the highest quality components at the most competitive price.

**SANHUA IS LISTED AMONG TOP 100 STRONGEST CHINESE INDUSTRIAL BRANDS.**

After sustainable growth over the last 3 decades, Sanhua have made significant progress to introduce a comprehensive range of controls and line components for the Commercial Air conditioning and Refrigeration Industries and to increase its service level coverage in the most important European markets.

# SANHUA

**SANHUA** INTERNATIONAL
**info@sanhuaeurope.com**

## Technical information
## sanhuaeurope.com

**DOWNLOAD NOW**
*OUR ONLINE*
**CATALOGUE**

Certificate of registration
ISO 14001:2004

Certificate of registration
ISO 9001:2008

REACH
NR. 1907/2006
CONFORMITY DECLARATION

**BEST SUPPLIER AWARDS**

B/S/H/ Carrier TRANE

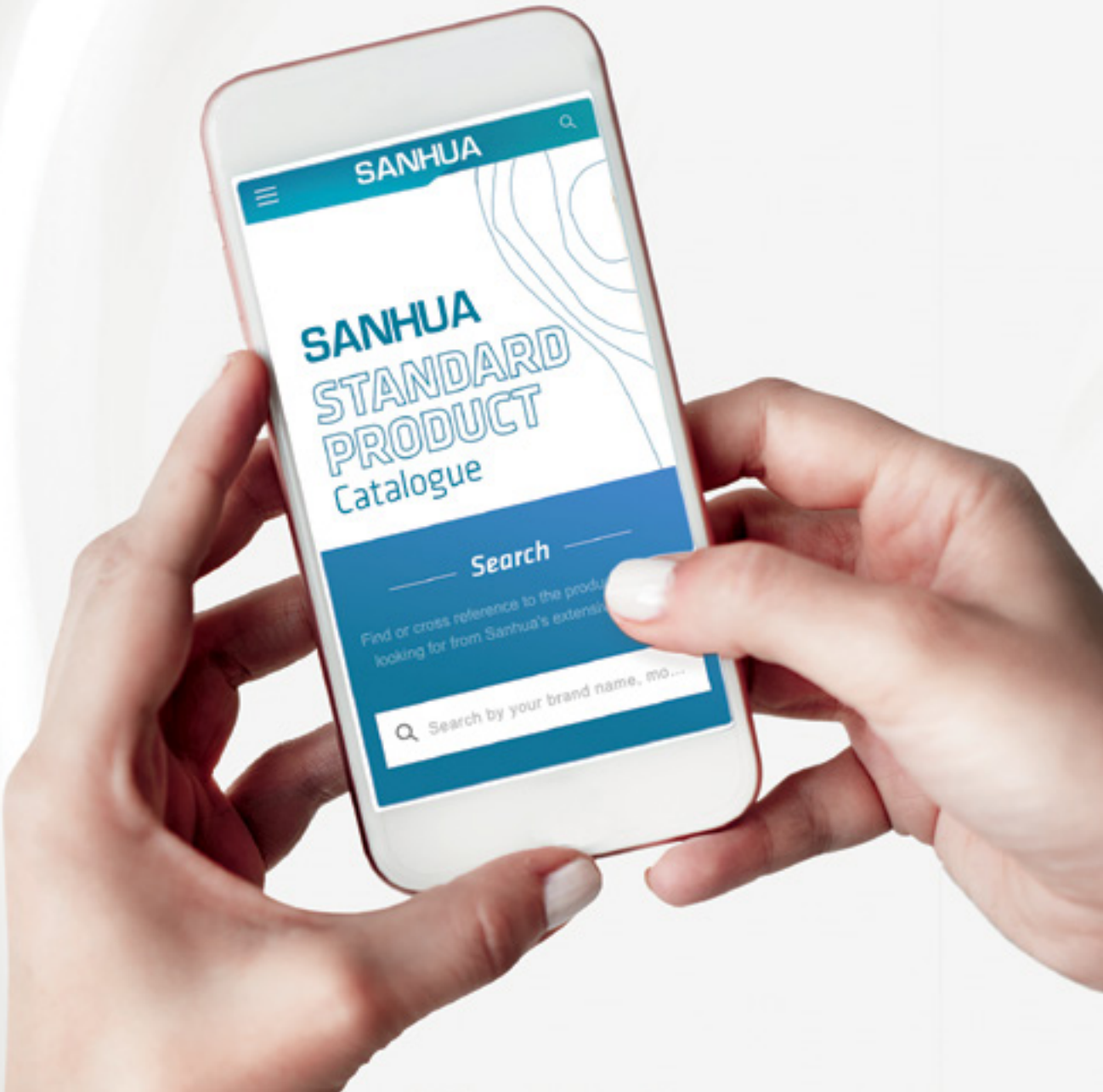

# SUMMARY


| | |
|---|---|
| **PULSE EXPANSION VALVE** *PEV SERIES* | 10 |
| **ELECTRONIC EXPANSION VALVE** *SEK SERIES* | 18 |
| **ELECTRONIC EXPANSION VALVE** *DPF-TS/S SERIES* | 28 |
| **ELECTRONIC EXPANSION VALVE** *DBF SERIES* | 32 |
| **ELECTRONIC EXPANSION VALVE** *LPF SERIES* | 36 |
| **ELECTRONIC EXPANSION VALVE CONTROLLER** *SECR03 SERIES* | 42 |
| **ELECTRONIC EXPANSION VALVE CONTROLLER** *SECR04 SERIES* | 48 |
| **ELECTRONIC EXPANSION VALVE CONTROLLER** *SECR05 SERIES* | 54 |
| **ELECTRONIC EXPANSION VALVE CONTROLLER** *SECR06 SERIES* | 59 |
| **ELECTRONIC EXPANSION VALVE CONTROLLER** *SECD04 SERIES* | 63 |
| **ELECTRONIC EXPANSION VALVE CONTROLLER** *SEC61 SERIES* | 68 |
| **ELECTRONIC EXPANSION VALVE** *SEC HD SERIES* | 74 |
| **ELECTRONIC EXPANSION VALVE** *VPF SERIES* | 78 |
| **ELECTRONIC EXPANSION VALVE DRIVER** *VSD2010 SERIES* | 90 |
| **ELECTRONIC EXPANSION VALVE DRIVER** *VSD1002 SERIES* | 92 |
| **ELECTRONIC EXPANSION VALVE DRIVER** *VSD2001 SERIES* | 94 |
| **VARIABLE SPEED DRIVE** *SD2 SERIES* | 96 |
| **PRESSURE SENSOR** *YCQB SERIES* | 107 |
| **PRESSURE SENSOR** *YCQC SERIES* | 111 |
| **PRESSURE CONTROLS** *PSV01/50/60/15/16 SERIES* | 117 |
| **MINI PRESSURE SWITCHES** *MPS SERIES* | 128 |
| **SOLENOID VALVE** *MDF SERIES* | 132 |
| **SOLENOID VALVE** *MDF-A02 (NO) SERIES* | 142 |
| **SOLENOID COIL** *MQ-A11 SERIES* | 150 |
| **SOLENOID VALVE** *FDF N/C SERIES* | 152 |
| **SOLENOID VALVE** *FDF N/O SERIES* | 154 |
| **SOLENOID VALVE** *FDF-G N/C SERIES* | 156 |
| **SOLENOID VALVE** *LDF SERIES* | 159 |
| **THERMOSTATIC EXPANSION VALVE** *RFKH SERIES* | 165 |
| **THERMOSTATIC EXPANSION VALVE** *RFGC SERIES* | 176 |
| **THERMOSTATIC EXPANSION VALVE** *RFGB SERIES* | 182 |
| **THERMOSTATIC EXPANSION VALVE** *RFGD SERIES* | 200 |
| **BALL VALVE** *SBV SERIES* | 213 |
| **BALL VALVE** *GBV SERIES* | 219 |
| **BALL VALVE** *CBV SERIES* | 222 |
| **BALL VALVE** *CBVT SERIES* | 226 |
| **BALL VALVE** *EBV SERIES* | 230 |
| **BALL VALVE** *EBVC SERIES* | 238 |
| **BALL VALVE** *EBD SERIES* | 240 |
| **GZJA SUB ASSEMBLY SERIES: BALL VALVE + CHECK VALVE [R744 SUB-CRITICAL]** *GZJA SERIES* | 242 |
| **CHECK VALVE PISTON TYPE** *YCVS SERIES* | 244 |
| **CHECK VALVE MAGNETIC TYPE** *CCV-H SERIES* | 250 |
| **$CO_2$ CHECK VALVE** *BCV SERIES* | 252 |
| **SIGHT GLASS** *SYJ SERIES* | 254 |
| **BRASS SERVICE VALVE** *SSV SERIES* | 258 |
| **SERVICE VALVES** *CSV SERIES* | 260 |
| **CHARGE VALVE** *TCJ SERIES* | 264 |
| **UNI-FLOW FILTER DRIER** *DTG SERIES* | 267 |
| **BI-FLOW FILTER DRIER** *STGB/F SERIES* | 280 |
| **FILTER DRIERS WITH REPLACEABLE CORE** *HTG SERIES* | 294 |
| **LIQUID LINE FILTER DRIER WITH SIGHT GLASS** *DSG SERIES* | 304 |
| **LIQUID LINE FILTER DRIER WITH SIGHT GLASS** *DTG-M02 SERIES* | 308 |
| **4 WAY REVERSING VALVE** *SHF SERIES* | 314 |
| **4 WAY REVERSING VALVE** *SHF-G SERIES* | 327 |


**Note:** Sanhua accepts no responsibility for any errors that may occur in this catalogue. Sanhua accepts no responsibility for any product selection made from this material, it is the customers sole responsibility to ensure the correct selection of any components.

GLOBAL FOOTPRINT &

# LOCAL SUPPORT

*Global producer of high-quality refrigeration components and leading supplier in HVAC&R industries since 1984*

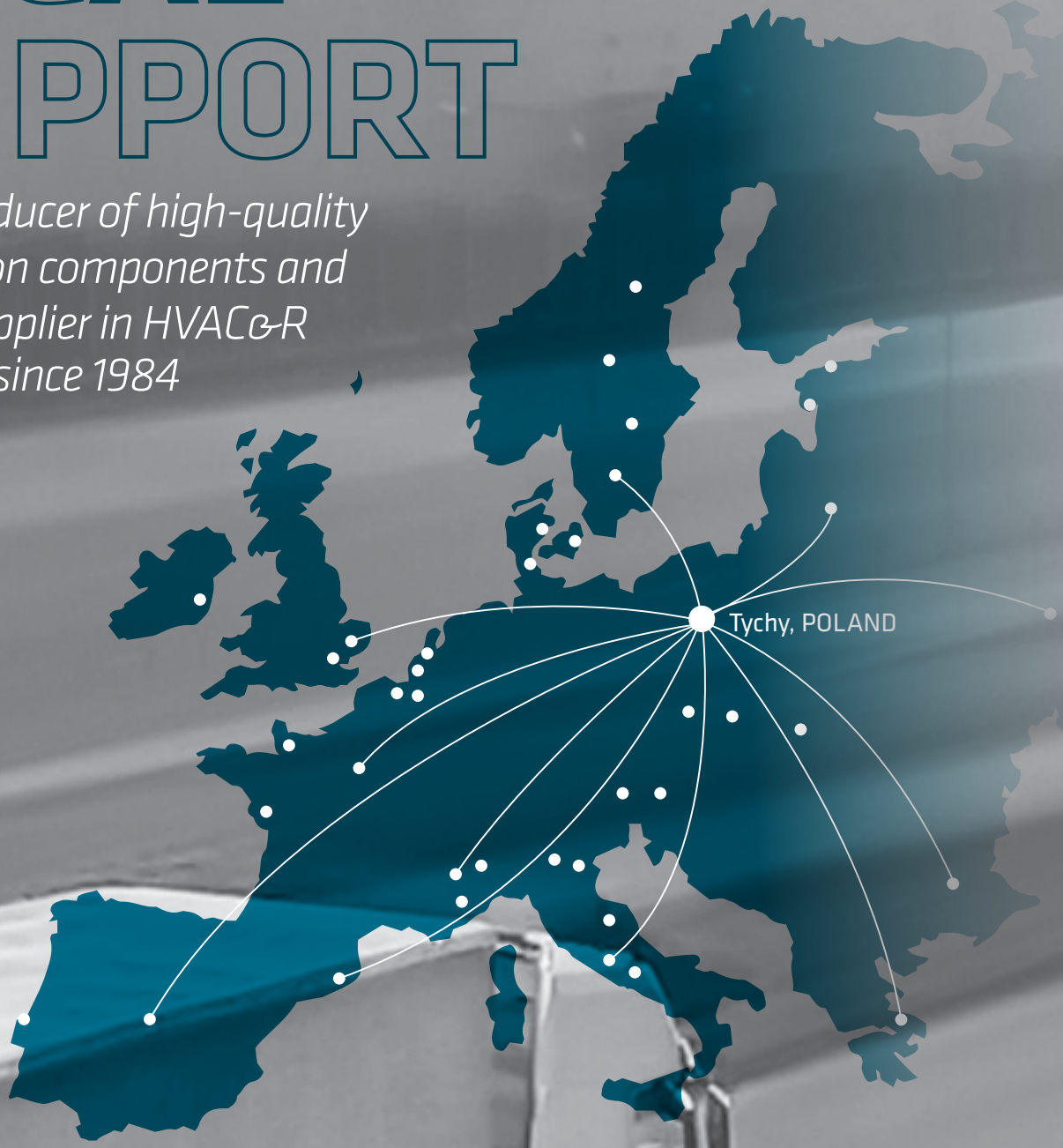


SANHUA

## KEEPS YOU ONE STEP AHEAD OF THE COMING EFFICIENCY AND ENVIRONMENTAL EUROPEAN CHALLENGES

### EEV TECHNOLOGY AND ELECTRONIC CONTROLS

IMPROVES HVAC&R SYSTEM EFFICIENCY UP TO 20%

DPF&VPF SERIES FROM 2KW TO 1400KW
**75KW AND 1400KW AVAILABLE IN QUARTER 4*

ADVANCED MSS *(MINIMUM STABLE SUPERHEAT)* CONTROL LOGIC

2KW

1400KW

### MICRO-CHANEL HEAT EXCHANGERS

IMPROVES EFFICIENCY BY 30%

REFRIGERANT CHARGE REDUCTION BY 30% *ENVIRONMENTAL FRIENDLY*

MCHE IS LIGHTER IN WEIGHT, SMALLER IN VOLUME *COMPACT DESIGN*

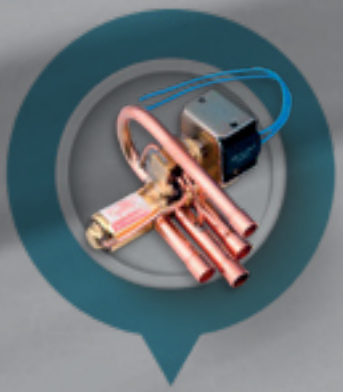

### FOUR WAY REVERSING VALVE

IMPROVES EFFICIENCY BY 5%

SHF SERIES 1KW TO 420 KW

WIDEST RANGE IN THE MARKET WITH SINGLE BODY DESIGN

1KW

420KW

# YOUR ROAD MAP TO THE ECO-DESIGN DIRECTIVE

**SANHUA** INTERNATIONAL
**info@sanhuaeurope.com**

# THE SOLUTION IS HERE

## SANHUA IS YOUR PARTNER WITH COMPLETE RANGE AND TECHNOLOGY TO ADRESS NEW EFFICIENCY CHALLENGES

## *Commercial Refrigeration Application Solutions*

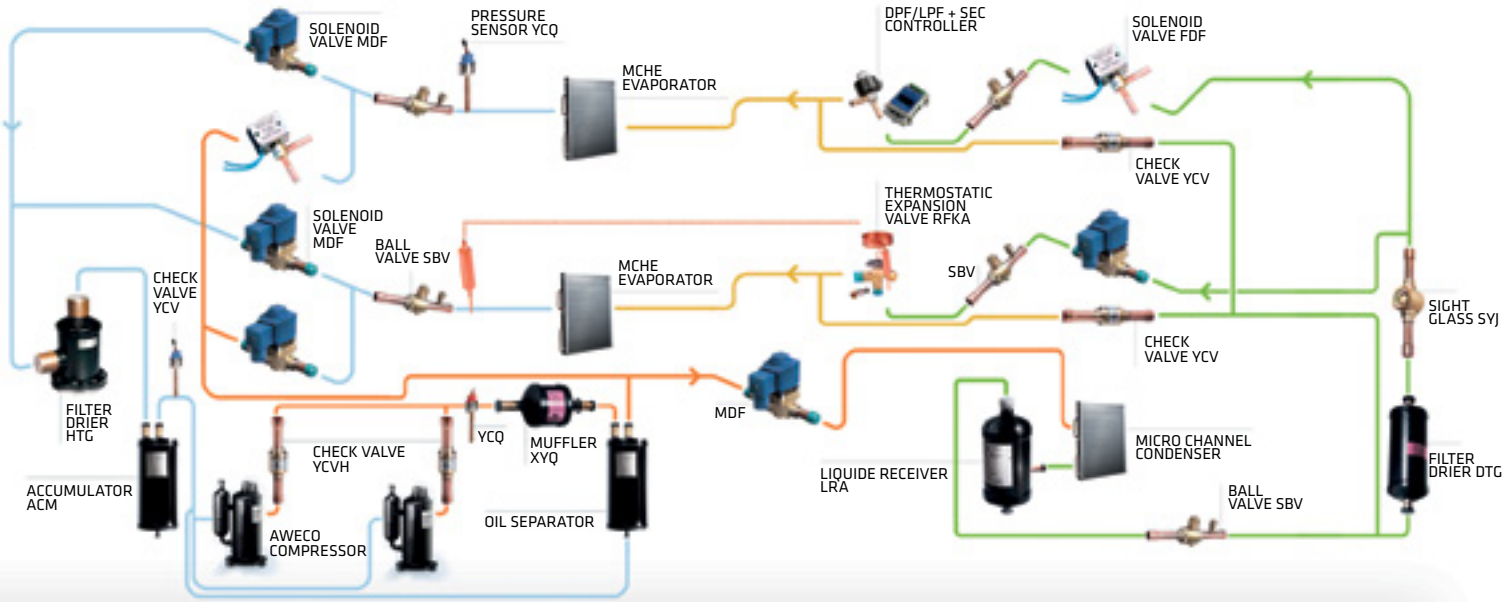


SANHUA

# COMMERCIAL AIR CONDITIONING
## VRF SYSTEM

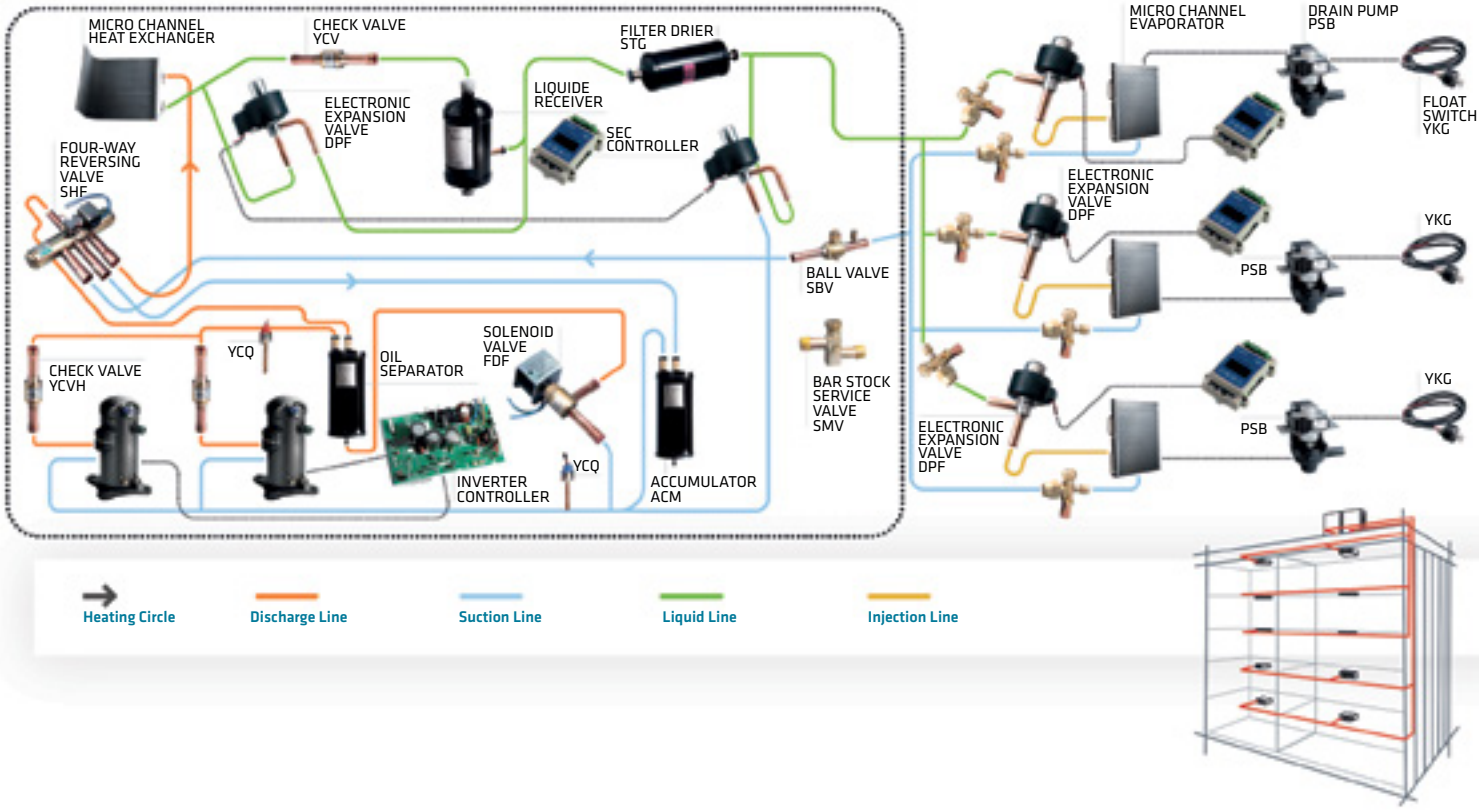


# *Heat Pump* Application Solutions

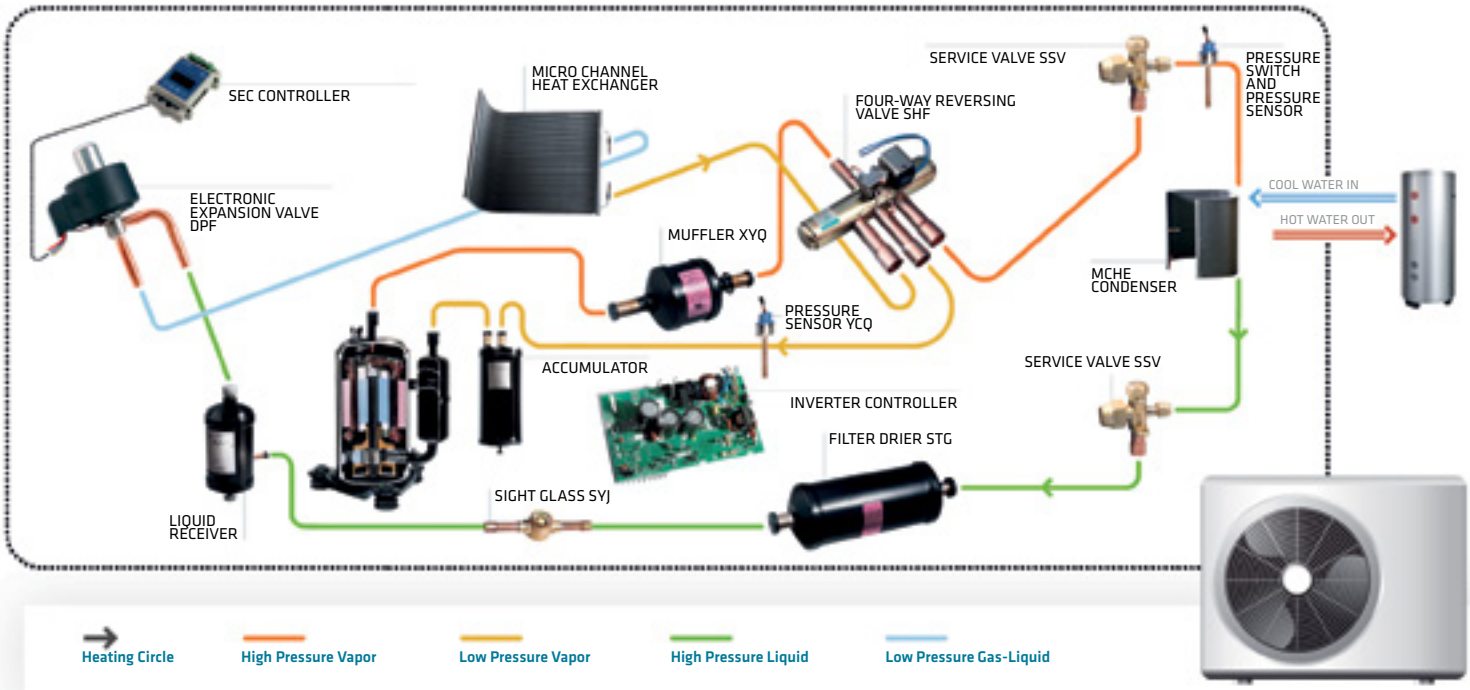


CHILLING IDEAS WORLDWIDE

***PEV*** *SERIES*

# PULSE EXPANSION VALVE

PEV series pulse expansion valves are specially designed for use in refrigeration systems to precisely control the flow of refrigerant into the evaporator. Due to its solenoid valve structure, the flow is regulated by pulse width control (duration of on/off power).

## FEATURES

- 90 BAR DESIGN FOR R744 REFRIGERANT
- LOWER KV VALUES CAN BE ACHIEVED (PEV0 IS ONLY 0.003M3/H)
- SOLENOID VALVE STRUCTURE, WITH DIRECT SHUT-OFF FUNCTION IN CASE OF SUDDEN POWER FAILURE
- THE VALVE BODY CAN BE REMOVED AND THE BUILT-IN FILTER CAN BE REPLACED FOR EASY CLEANING AND MAINTENANCE

### GENERAL SPECIFICATIONS

- Applicable for all common HFC and HFO refrigerants such as R134a, R404A, R407A/F, R407C, R407H, R410A, R448A, R449A, R449B,R450A, R452A, R513A, R507A and R744 ($CO_2$)
- Medium temperature TS min./max.: -60°C to +70°C (Outlet side of Valve)
- Ambient temperature min./max.: -40°C to +55°C
- Max. working pressure: 90 bar
- Min. OPD: 0 bar
- PED declaration, EN60335-2-xx for flammable refrigerants for PEV and on request for PEV-S

# PULSE EXPANSION VALVE

## ELECTRICAL PARAMETERS

- Recommended period of cycle time: 6 seconds
- Regulation range (capacity range): 10%-100%
- Voltage range: -15%~10%
- Insulation class of coil: F
- Protection class: IP 67

## GENERAL CHARACTERISTICS

| Valve Model | U11 Code Multi-Pack | kV m3/h | MWP [Bar] | MOPD [liquid][1)] | Dimensions | | Weight (g) |
|---|---|---|---|---|---|---|---|
| | | | | [Bar] | Øe inlet | Ød outlet | |
| PEV0-1 | 10386000502 | 0.003 | 90 | 35 | 3/8 | 1/2 | 185 |
| PEV0-2 | 10386001602 | | | | 10mm | 12mm | |
| PEV1-1 | 10386000402 | 0.009 | | | 3/8 | 1/2 | |
| PEV1-2 | 10386001502 | | | | 10mm | 12mm | |
| PEV2-1 | 10386000702 | 0.016 | | | 3/8 | 1/2 | |
| PEV2-2 | 10386001402 | | | | 10mm | 12mm | |
| PEV3-1 | 10386000102 | 0.024 | | | 3/8 | 1/2 | |
| PEV3-1S | 10386002402 | | | | 3/8 | 1/2 | |
| PEV3-2 | 10386001202 | | | | 10mm | 12mm | 218 |
| PEV3-2S | 10386002502 | | | | 10mm | 12mm | 185 |
| PEV3.5-1 | 10386000802 | 0.035 | | 30 | 3/8 | 1/2 | 185 |
| PEV3.5-1S | 10386002202 | | | 35 | 3/8 | 1/2 | 218 |
| PEV3.5-2 | 10386001302 | | | 30 | 10mm | 12mm | 185 |
| PEV3.5-2S | 10386002302 | | | 35 | 10mm | 12mm | 218 |
| PEV4-1 | 10386000302 | 0.046 | | 30 | 3/8 | 1/2 | 185 |
| PEV4-1S | 10386002602 | | | 35 | 3/8 | 1/2 | 218 |
| PEV4-2 | 10386001102 | | | 30 | 10mm | 12mm | 185 |
| PEV4-2S | 10386002702 | | | 35 | 10mm | 12mm | 218 |
| PEV5-1 | 10386000602 | 0.064 | | 25 | 3/8 | 1/2 | 185 |
| PEV5-1S | 10386002802 | | | 35 | 3/8 | 1/2 | 218 |
| PEV5-2 | 10386001002 | | | 25 | 10mm | 12mm | 185 |
| PEV5-2S | 10386002902 | | | 35 | 10mm | 12mm | 218 |
| PEV6-1 | 10386000202 | 0.114 | | 18 | 3/8 | 1/2 | 185 |
| PEV6-1S | 10386002102 | | | 35 | 3/8 | 1/2 | 218 |
| PEV6-2 | 10386000902 | | | 18 | 10mm | 12mm | 185 |
| PEV6-2S | 10386003002 | | | 35 | 10mm | 12mm | 218 |

[1)]MOPD at rated voltage PEVx-yS = with Super power head + Super coil to increase the MOPD

# PULSE EXPANSION VALVE

## PEVx-yS = WITH SUPER POWER HEAD + SUPER COIL TO INCREASE THE MOPD

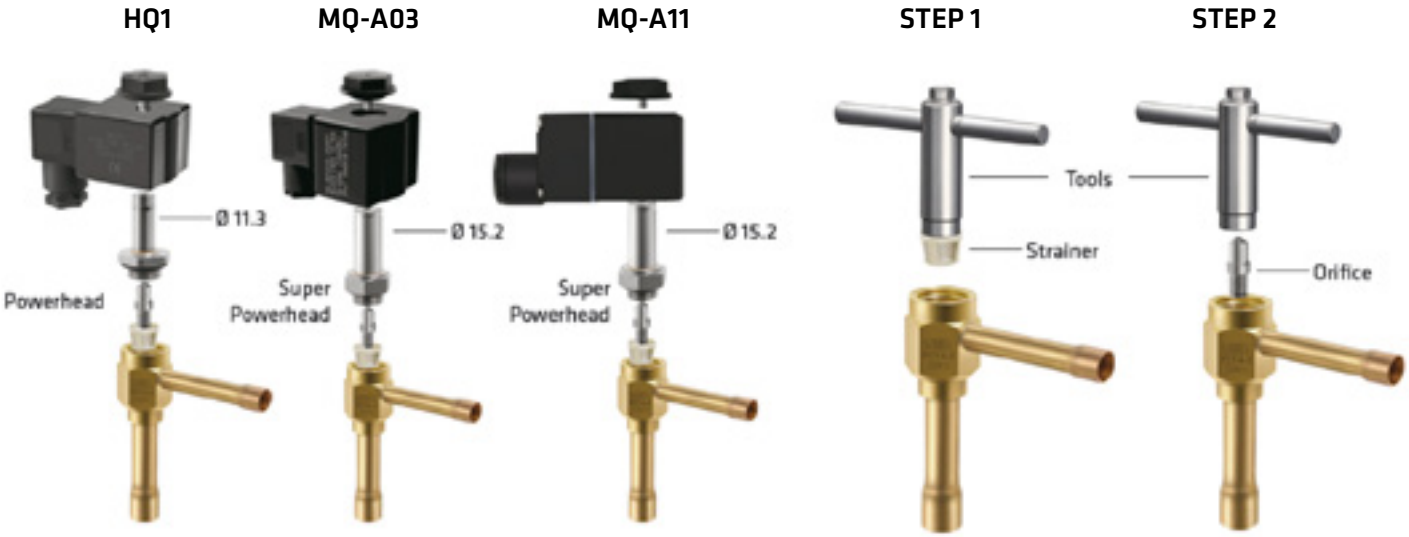


PEV can be equipped with higher power coil and realize higher MOPD by changing de powerhead

Strainer and orifice can be changed and maintained through tools provided by Sanhua

# PULSE EXPANSION VALVE

## DIMENSIONS

*Condition 1: Tc/Te/Sc/SH: 45°C/-10°C/2K/6K 0°C/-20°C/2K/6K for R744*
*Strainer and orifice can be changed and maintained through tools provided by Sanhua*

| Valve Model | Maximal Cooling Capacity [kW] | | | | | | | |
|---|---|---|---|---|---|---|---|---|
| | R134a | R404A | R407F | R448A | R449A | R450A | R452A | R513A |
| PEV0 | 0.26 | 0.23 | 0.36 | 0.32 | 0.32 | 0.22 | 0.24 | 0.21 |
| PEV1 | 0.75 | 0.66 | 1.06 | 0.95 | 0.93 | 0.65 | 0.69 | 0.62 |
| PEV2 | 1.32 | 1.16 | 1.86 | 1.66 | 1.63 | 1.15 | 1.22 | 1.08 |
| PEV3(-S) | 2.34 | 2.06 | 3.30 | 2.94 | 2.88 | 2.04 | 2.16 | 1.92 |
| PEV3.5(-S) | 2.96 | 2.61 | 4.18 | 3.73 | 3.66 | 2.58 | 2.74 | 2.44 |
| PEV4(-S) | 3.91 | 3.44 | 5.52 | 4.92 | 4.83 | 3.41 | 3.61 | 3.22 |
| PEV5(-S) | 5.44 | 4.80 | 7.69 | 6.86 | 6.72 | 4.74 | 5.03 | 4.48 |
| PEV6(-S) | 9.33 | 8.22 | 13.18 | 11.75 | 11.52 | 8.13 | 8.62 | 7.68 |

| Valve Model | Maximal Cooling Capacity [kW] | | | | | | | |
|---|---|---|---|---|---|---|---|---|
| | R454B | R454C | R455A | R1234yf | R1234ze | R290 | R410A | R744 |
| PEV0 | 0.46 | 0.28 | 0.30 | 0.18 | 0.20 | 0.35 | 0.40 | 0.54 |
| PEV1 | 1.34 | 0.81 | 0.88 | 0.53 | 0.58 | 1.01 | 1.15 | 1.57 |
| PEV2 | 2.36 | 1.43 | 1.55 | 0.92 | 1.02 | 1.76 | 2.02 | 2.75 |
| PEV3(-S) | 4.18 | 2.53 | 2.75 | 1.64 | 1.80 | 3.13 | 3.58 | 4.88 |
| PEV3.5(-S) | 5.30 | 3.20 | 3.48 | 2.08 | 2.29 | 3.96 | 4.54 | 6.18 |
| PEV4(-S) | 6.99 | 4.23 | 4.59 | 2.74 | 3.02 | 5.23 | 6.00 | 8.16 |
| PEV5(-S) | 9.74 | 5.89 | 6.40 | 3.82 | 4.21 | 7.29 | 8.35 | 11.36 |
| PEV6(-S) | 16.69 | 10.09 | 10.97 | 6.54 | 7.21 | 12.49 | 14.31 | 19.48 |

# PULSE EXPANSION VALVE

*Condition 2: Tc/Te/Sc/SH: 45°C/-35°C/2K/6K*
*-10°C/-40°C/2K/6K for R744*

| Valve Model | Maximal Cooling Capacity [kW] | | | | | | | |
|---|---|---|---|---|---|---|---|---|
| | R134a | R404A | R407F | R448A | R449A | R450A | R452A | R513A |
| PEV0 | 0.24 | 0.21 | 0.35 | 0.31 | 0.30 | 0.21 | 0.22 | 0.19 |
| PEV1 | 0.71 | 0.61 | 1.02 | 0.90 | 0.88 | 0.60 | 0.63 | 0.57 |
| PEV2 | 1.24 | 1.07 | 1.80 | 1.58 | 1.55 | 1.06 | 1.11 | 1.00 |
| PEV3(-S) | 2.20 | 1.90 | 3.18 | 2.80 | 2.74 | 1.87 | 1.97 | 1.76 |
| PEV3.5(-S) | 2.79 | 2.40 | 4.04 | 3.55 | 3.47 | 2.37 | 2.50 | 2.24 |
| PEV4(-S) | 3.68 | 3.17 | 5.33 | 4.69 | 4.58 | 3.13 | 3.30 | 2.95 |
| PEV5(-S) | 5.12 | 4.42 | 7.42 | 6.53 | 6.38 | 4.36 | 4.60 | 4.11 |
| PEV6(-S) | 8.78 | 7.58 | 12.71 | 11.19 | 10.94 | 7.47 | 7.88 | 7.05 |

| Valve Model | Maximal Cooling Capacity [kW] | | | | | | | |
|---|---|---|---|---|---|---|---|---|
| | R454B | R454C | R455A | R1234yf | R1234ze | R290 | R410A | R744 |
| PEV0 | 0.47 | 0.26 | 0.28 | 0.16 | 0.18 | 0.33 | 0.40 | 0.62 |
| PEV1 | 1.35 | 0.75 | 0.81 | 0.47 | 0.53 | 0.96 | 1.15 | 1.81 |
| PEV2 | 2.38 | 1.32 | 1.43 | 0.82 | 0.93 | 1.69 | 2.02 | 3.17 |
| PEV3(-S) | 4.21 | 2.33 | 2.53 | 1.46 | 1.64 | 2.99 | 3.58 | 5.63 |
| PEV3.5(-S) | 5.34 | 2.96 | 3.21 | 1.85 | 2.08 | 3.80 | 4.54 | 7.13 |
| PEV4(-S) | 7.05 | 3.90 | 4.24 | 2.44 | 2.75 | 5.01 | 5.99 | 9.41 |
| PEV5(-S) | 9.82 | 5.44 | 5.91 | 3.40 | 3.82 | 6.98 | 8.35 | 13.11 |
| PEV6(-S) | 16.83 | 9.32 | 10.12 | 5.83 | 6.56 | 11.96 | 14.30 | 22.47 |

# PULSE EXPANSION VALVE

## COIL MODEL

| Model | U11 Code Multi-Pack | Rated Voltage | Frequency | Power | Insulation Class | Ingress Protection | Weight (g) | Certification |
|---|---|---|---|---|---|---|---|---|
| HQ1F11 | 10780001202 | AC220~230V | 50HZ | 7W | | | | TUV / UL |
| HQ1D17 | 10780001302 | AC120V | 50HZ | 6W | | | | TUV / UL |
| HQ1D80 | 10780001602 | AC120V | 60Hz | 6w | | | 185.9 | TUV / UL |
| HQ1K17 | 10780001402 | AC24V | 50HZ | 6W | | IP 67 | | TUV / UL |
| HQ1K80 | 10780001502 | AC24V | 60Hz | 6w | | | | TUV / UL |
| MQ-A0322F-007001 | 10820030702 | AC220-230V | 50Hz | 13.5W | | | 220 | TUV |
| MQ-A0322F-007002 | 10820030602 | AC220-230V | 60Hz | 16.5W | F | | 210 | TUV |
| MQ-A0322F-007003 | 10820030502 | AC220-230V | 60HZ | 16.5W | | IP 65 | 211 | UL |
| MQ-A03024-007001 | 10820030402 | AC24V | 50Hz | 13.5W | | | 225 | TUV |
| MQ-A1122F-007001 | 10820030302 | AC220-230V | 50Hz | 13.5W | | | 260 | TUV |
| MQ-A1122F-007002 | 10820030202 | AC220-230V | 60Hz | 16.5W | | IP 67 | 260 | TUV |
| MQ-A1122F-007003 | 10820030102 | AC220-230V | 60Hz | 16.5W | | | 225 | UL |
| MQ-A11024-007001 | 10820030002 | AC24V | 50Hz | 13.5W | | | 225 | TUV |

# PULSE EXPANSION VALVE

## DIMENSIONS

*(unit is mm)*

Standard PEV series

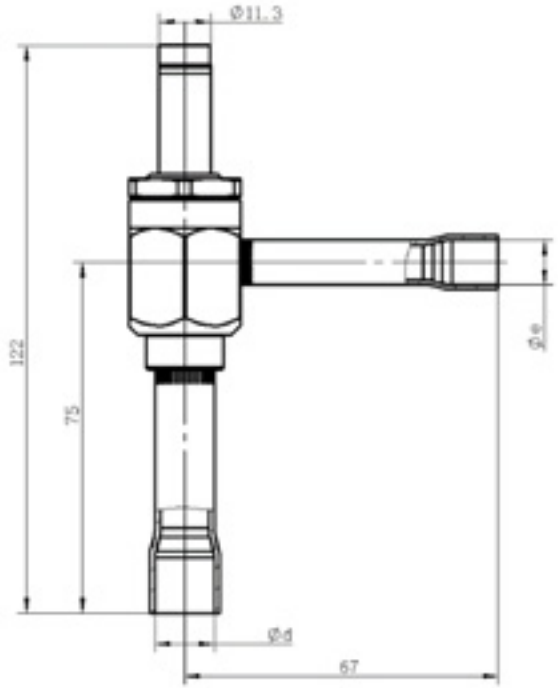


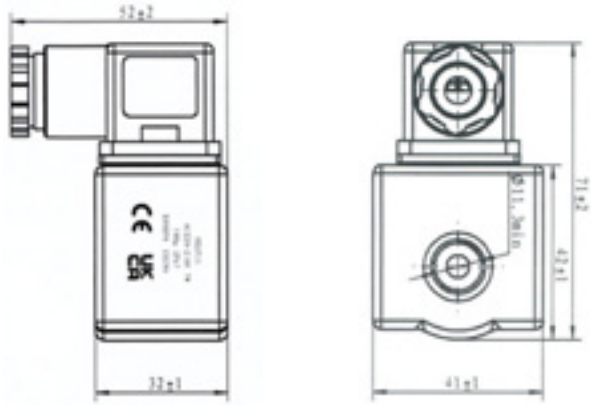

**HQ1 Coil**

Super Powerhead

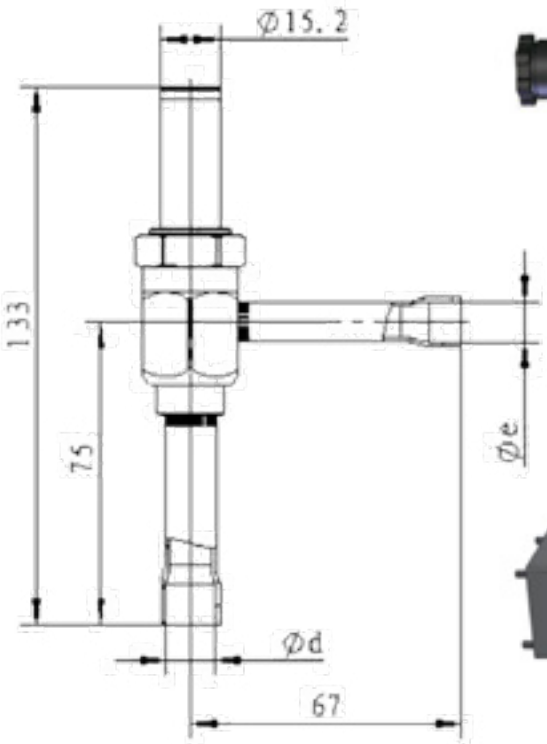

**MQ-A03 Coil**

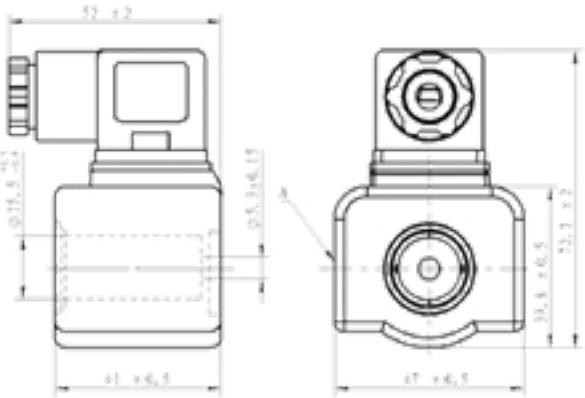

**MQ-A11 Coil**

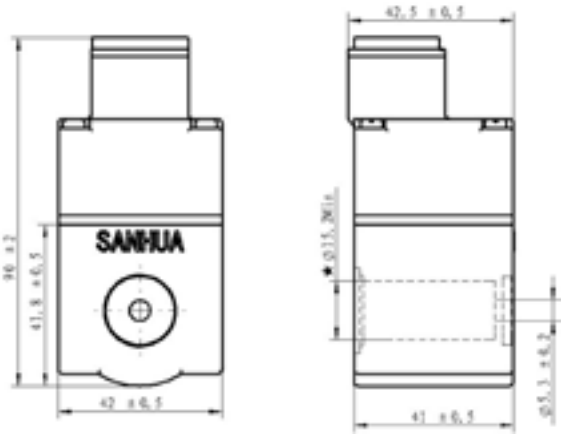


PEV-S series

# PULSE EXPANSION VALVE

## SPAREPARTS

| Model | PEV-K01 | PEV-K02 | PEV-K03 | PEV-K04 | PEV-K05 | PEV-K06 |
|---|---|---|---|---|---|---|
| U11 code | 20386002302 | 20386002402 | 20386002702 | 20386002502 | 20386002602 | 20386004702 |
| picture | 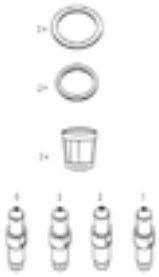 | | | | | |

## ACCESSORY

| Product | Description | U11 code |
|---|---|---|
| Solenoid valve tester | Permanent magnet for PEV<br>(for installation and testing purpose) | 10108000102 |

***SEK*** *SERIES*

# ELECTRONIC EXPANSION VALVE KIT

## FEATURES

- COMPLETE AND SIMPLE SOLUTION FOR REFRIGERATION SYSTEM
- QUICK AND ACCURATE SUPERHEAT CONTROL TO ENSURE THE SYSTEM OPERATING WELL
- KIT CONTAINS SEC SERIES CONTROLLER: EEV, PRESSURE TRANSDUCER WITH PACKARD CABLE, TEMPERATURE SENSOR
- LPF SERIES, EEV WITH VERY LOW INTERNAL LEAKAGE <1ML/MIN

### MODEL DESIGNATION LEGEND

| NO. | | | Model Designation Legend |
|---|---|---|---|
| 1 | 2 | 3 | |
| **SEK** | 10 | 01 | SANHUA electronic Expansion valve Kit |
| SEK | **10** | 01 | Valve orifice |
| SEK | 10 | **01** | Design code |

### GENERAL SPECIFICATIONS

*Controller:*

| Items | Description |
|---|---|
| Dimension | 87(W)mm x 114(H)mm x 30 (D)mm |
| Power supply | 24Vdc+10%/-15%<br>Class II |
| Power consumption | 9W with LPF at 24VDC |
| Operation | -30~55°C, Humidity≤95%RH |
| Storage | -30~55°C, Humidity≤95%RH |
| Protection level | IP20 |

# ELECTRONIC EXPANSION VALVE KIT

*LPF and Coil with 3m cable length:*

| Items | Description |
|---|---|
| Rated voltage | 12V DC (± 10%) |
| Excitation mode | 1-2 phase excitation, uni-polar–500stps |
| Excitation rate | 30 - 90pps for LPF08 ~32<br>30 - 40pps for LPF 45 ~62 |
| Current and resistance | 260mA, 46 ± 3.7 Ω/phase(20°C) |
| Medium temp. | -40°C / +70°C (duty cycle≤40%) |
| Ambient temp. | -40°C / +60°C for LPF 08~32<br>-30°C / +60°C for LPF 45~62 |
| Relative humidity | 0 to 95% RH |
| Design Pressure | 42 bar for LPF08 ~32<br>49 bar for LPF 45~62 |
| MOPD | 35 bar |

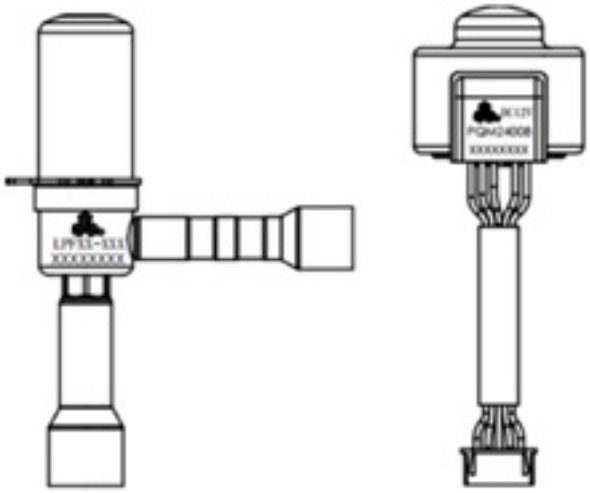

*Pressure transducer and Packard cablewith 2m length:*

| Items | Description |
|---|---|
| Voltage supply | 10-30Vdc |
| Output | 4-20mA |
| Pressure range | -1~12 Bar |
| Test Pressure | 52.5Bar |
| Accuracy | ±0.8% F.S.(-40~+40°C) |
| Protection class | IP 67 |
| Connection Type | Thread SAE - 1/4"7/16-20UNF |
| Electrical connector | Packard connector |

# ELECTRONIC EXPANSION VALVE KIT

*Temperature sensor:*

| Items | Description |
|---|---|
| Type | NTC 5KΩat 25°C |
| Wire | 2×0.5mm²-2m length |
| Protection class | IP 67 |
| Accuracy | ±0.3°C (below25°C) |
| Temperature Range | -50 ~50°C |

## ORDERING METHOD

| Model | Part Number | Valve Connection | Common products | Valve type |
|---|---|---|---|---|
| SEK08-01 | 10142001402 | 3/8 – 1/2 | SEC612-R4 -> Controller<br>YCQC02L18 –> Pressure Transmitter<br>YCQC02-013022 –> Packard Cable<br>NTC2A1 -> Probe<br>PQ-M24012-000008 –> EEV coil | LPF08-001 |
| SEK10-01 | 10142000102 | | | LPF10-002 |
| SEK14-01 | 10142000302 | | | LPF14-002 |
| SEK18-01 | 10142000502 | | | LPF18-002 |
| SEK24-01 | 10142000702 | | | LPF 24-002 |
| SEK30-01 | 10142001302 | | | LPF30-001 |
| SEK32-01 | 10142001202 | | | LPF32-001 |
| SEK45-01 | 10142002902 | 5/8 - 5/8 | | LPF45-001 |
| SEK52-01 | 10142003002 | | | LPF52-001 |
| SEK55-01 | 10142003102 | | | LPF55-001 |
| SEK62-01 | 10142003202 | | | LPF62-001 |
| SEK08-02 | 10142002102 | 10 -12 mm | | LPF-08-003 |
| SEK10-02 | 10142000202 | | | LPF10-004 |
| SEK14-02 | 10142000402 | | | LPF14-004 |
| SEK18-02 | 10142000602 | | | LPF18-003 |
| SEK24-02 | 10142000802 | | | LPF24-003 |
| SEK30-02 | 10142002002 | | | LPF30-002 |
| SEK32-02 | 10142001902 | | | LPF32-003 |

Compatible with the main refrigerants on the market:
R404A, R134a, R407C, R507, R1234ze, R1234yf, R450A, R513A, R448A, R449A, R452A, R245fa, R23, R407A, R407F, R124, R407H, R454C, R455A.
For other refrigerants as R290, CO2, R410a... please contact your local representative.

# ELECTRONIC EXPANSION VALVE KIT

## CAPACITY SELECTION FOR LPF

| Valve Model | Evap Temp. ( °C ) | Max cooling capacity [kW] | | | | |
|---|---|---|---|---|---|---|
| | | Cond. Temp. @35°C, SH=6K, SBC=2K | | | | |
| | | R404A | R449A | R452A | R513A | R455A |
| LPF08 | -30 | 2.0 | 2.7 | 2.1 | 1.8 | 2.6 |
| | -10 | 2.0 | 2.7 | 2.1 | 1.8 | 2.7 |
| | 10 | 1.8 | 2.5 | 2.0 | 1.6 | 2.5 |
| LPF10 | -30 | 3.2 | 4.4 | 3.3 | 2.9 | 4.2 |
| | -10 | 3.3 | 4.4 | 3.4 | 2.9 | 4.3 |
| | 10 | 2.9 | 4.0 | 3.2 | 2.7 | 4.1 |
| LPF14 | -30 | 6.1 | 8.4 | 6.3 | 5.4 | 8.0 |
| | -10 | 6.2 | 8.4 | 6.5 | 5.6 | 8.2 |
| | 10 | 5.6 | 7.7 | 6.0 | 5.0 | 7.8 |
| LPF18 | -30 | 8.4 | 11.6 | 8.8 | 7.5 | 11.0 |
| | -10 | 8.6 | 11.6 | 9.0 | 7.7 | 11.3 |
| | 10 | 7.7 | 10.6 | 8.3 | 7.0 | 10.7 |
| LPF24 | -30 | 11.5 | 15.8 | 12.0 | 10.2 | 15.0 |
| | -10 | 11.7 | 15.9 | 12.4 | 10.5 | 15.5 |
| | 10 | 10.5 | 14.5 | 11.4 | 9.5 | 14.7 |
| LPF30 | -30 | 16.3 | 22.4 | 17.0 | 14.5 | 21.3 |
| | -10 | 16.6 | 22.5 | 17.5 | 14.9 | 21.9 |
| | 10 | 14.9 | 20.5 | 16.1 | 13.5 | 20.8 |
| LPF32 | -30 | 17.9 | 24.6 | 18.6 | 15.9 | 23.4 |
| | -10 | 18.2 | 24.7 | 19.2 | 16.3 | 24.1 |
| | 10 | 16.3 | 22.5 | 17.7 | 14.8 | 22.8 |
| LPF45 | -30 | 40 | 54.9 | 41.6 | 35.5 | 52.2 |
| | -10 | 40.8 | 55.3 | 42.9 | 36.4 | 53.8 |
| | 10 | 36.5 | 50.4 | 39.6 | 33.1 | 51 |
| LPF52 | -30 | 53.6 | 73.5 | 55.7 | 47.5 | 69.9 |
| | -10 | 54.5 | 74 | 57.4 | 48.8 | 72 |
| | 10 | 48.9 | 67.4 | 53 | 44.2 | 68.3 |
| LPF55 | -30 | 62 | 85.1 | 64.5 | 55 | 80.9 |
| | -10 | 63.1 | 85.7 | 66.4 | 56.4 | 83.3 |
| | 10 | 56.6 | 78 | 61.3 | 51.2 | 79 |
| LPF62 | -30 | 75.4 | 103.5 | 78.4 | 66.9 | 98.4 |
| | -10 | 76.8 | 104.2 | 80.8 | 68.7 | 101.4 |
| | 10 | 68.8 | 94.9 | 74.6 | 62.3 | 96.1 |

# ELECTRONIC EXPANSION VALVE KIT

| Valve Model | Evap Temp. ( °C ) | Max cooling capacity [kW] | | | | |
|---|---|---|---|---|---|---|
| | | Cond. Temp. @45°C, SH=6K, SBC=2K | | | | |
| | | R404A | R449A | R452A | R513A | R455A |
| LPF08 | -30 | 1.9 | 2.7 | 1.9 | 1.7 | 2.5 |
| | -10 | 2.0 | 2.8 | 2.1 | 1.8 | 2.6 |
| | 10 | 1.9 | 2.6 | 2.0 | 1.8 | 2.6 |
| LPF10 | -30 | 3.0 | 4.3 | 3.2 | 2.8 | 4.0 |
| | -10 | 3.2 | 4.5 | 3.4 | 3.0 | 4.3 |
| | 10 | 3.1 | 4.3 | 3.3 | 2.9 | 4.2 |
| LPF14 | -30 | 5.7 | 8.2 | 6.0 | 5.3 | 7.7 |
| | -10 | 6.1 | 8.5 | 6.4 | 5.7 | 8.1 |
| | 10 | 5.9 | 8.2 | 6.3 | 5.5 | 8.0 |
| LPF18 | -30 | 7.9 | 11.4 | 8.3 | 7.4 | 10.6 |
| | -10 | 8.4 | 11.8 | 8.8 | 7.9 | 11.2 |
| | 10 | 8.1 | 11.3 | 8.7 | 7.7 | 11.1 |
| LPF24 | -30 | 10.8 | 15.5 | 11.3 | 10.1 | 14.5 |
| | -10 | 11.5 | 16.1 | 12.1 | 10.8 | 15.3 |
| | 10 | 11.1 | 15.5 | 11.9 | 10.5 | 15.2 |
| LPF30 | -30 | 15.3 | 22.0 | 16.0 | 14.3 | 20.5 |
| | -10 | 16.3 | 22.8 | 17.1 | 15.2 | 21.7 |
| | 10 | 15.7 | 21.9 | 16.8 | 14.8 | 21.5 |
| LPF32 | -30 | 16.8 | 24.1 | 17.5 | 15.7 | 22.5 |
| | -10 | 17.8 | 25.0 | 18.8 | 16.7 | 23.8 |
| | 10 | 17.2 | 24.0 | 18.4 | 16.3 | 23.6 |
| LPF45 | -30 | 37.6 | 53.9 | 39.2 | 35.1 | 50.3 |
| | -10 | 39.9 | 55.9 | 41.9 | 37.3 | 53.2 |
| | 10 | 38.5 | 53.7 | 41.2 | 36.4 | 52.7 |
| LPF52 | -30 | 50.4 | 72.2 | 52.5 | 46.9 | 67.2 |
| | -10 | 53.4 | 74.7 | 56.1 | 49.9 | 71.2 |
| | 10 | 51.5 | 71.9 | 55.1 | 48.7 | 70.5 |
| LPF55 | -30 | 58.3 | 83.5 | 60.7 | 54.3 | 77.8 |
| | -10 | 61.8 | 86.5 | 64.9 | 57.8 | 82.4 |
| | 10 | 59.6 | 83.2 | 63.8 | 56.4 | 81.6 |
| LPF62 | -30 | 70.9 | 101.6 | 73.9 | 66.1 | 94.7 |
| | -10 | 75.1 | 105.2 | 79 | 70.3 | 100.2 |
| | 10 | 72.5 | 101.2 | 77.6 | 68.6 | 99.3 |

# ELECTRONIC EXPANSION VALVE KIT

| Valve Model | Evap Temp. ( °C ) | Max cooling capacity [kW] | | | | |
|---|---|---|---|---|---|---|
| | | Cond. Temp. @55°C, SH=6K, SBC=2K | | | | |
| | | R404A | R449A | R452A | R513A | R455A |
| LPF08 | -30 | 1.6 | 2.5 | 1.7 | 1.6 | 2.3 |
| | -10 | 1.8 | 2.7 | 1.9 | 1.8 | 2.5 |
| | 10 | 1.8 | 2.7 | 2.0 | 1.9 | 2.5 |
| LPF10 | -30 | 2.6 | 4.1 | 2.8 | 2.7 | 3.7 |
| | -10 | 2.9 | 4.3 | 3.1 | 2.9 | 4.0 |
| | 10 | 3.0 | 4.3 | 3.2 | 3.0 | 4.2 |
| LPF14 | -30 | 5.0 | 7.7 | 5.3 | 5.1 | 7.0 |
| | -10 | 5.6 | 8.2 | 5.9 | 5.6 | 7.7 |
| | 10 | 5.7 | 8.2 | 6.1 | 5.7 | 7.9 |
| LPF18 | -30 | 6.9 | 10.7 | 7.3 | 7.0 | 9.7 |
| | -10 | 7.7 | 11.4 | 8.1 | 7.7 | 10.6 |
| | 10 | 7.8 | 11.4 | 8.4 | 7.9 | 10.9 |
| LPF24 | -30 | 9.5 | 14.6 | 10.0 | 9.6 | 13.3 |
| | -10 | 10.5 | 15.5 | 11.1 | 10.5 | 14.5 |
| | 10 | 10.7 | 15.6 | 11.5 | 10.8 | 14.9 |
| LPF30 | -30 | 13.4 | 20.7 | 14.1 | 13.5 | 18.8 |
| | -10 | 14.9 | 22.0 | 15.7 | 14.9 | 20.5 |
| | 10 | 15.2 | 22.0 | 16.2 | 15.3 | 21.1 |
| LPF32 | -30 | 14.7 | 22.7 | 15.5 | 14.8 | 20.7 |
| | -10 | 16.3 | 24.1 | 17.2 | 16.4 | 22.5 |
| | 10 | 16.7 | 24.1 | 17.8 | 16.8 | 23.1 |
| LPF45 | -30 | 32.9 | 50.7 | 34.6 | 33.2 | 46.2 |
| | -10 | 36.5 | 54 | 38.5 | 36.6 | 50.3 |
| | 10 | 37.3 | 54.1 | 39.8 | 37.6 | 51.7 |
| LPF52 | -30 | 44.1 | 67.9 | 46.3 | 44.4 | 61.8 |
| | -10 | 48.8 | 72.2 | 51.5 | 48.9 | 67.3 |
| | 10 | 49.8 | 72.3 | 53.3 | 50.3 | 69.1 |
| LPF55 | -30 | 51 | 78.6 | 53.5 | 51.4 | 71.6 |
| | -10 | 56.5 | 83.5 | 59.6 | 56.6 | 77.9 |
| | 10 | 57.7 | 83.6 | 61.6 | 58.2 | 80 |
| LPF62 | -30 | 62.1 | 95.6 | 65.1 | 62.5 | 87.1 |
| | -10 | 68.7 | 101.6 | 72.5 | 68.9 | 94.7 |
| | 10 | 70.2 | 101.7 | 75 | 70.8 | 97.3 |

# ELECTRONIC EXPANSION VALVE KIT

## PACKAGE DIMENSIONS

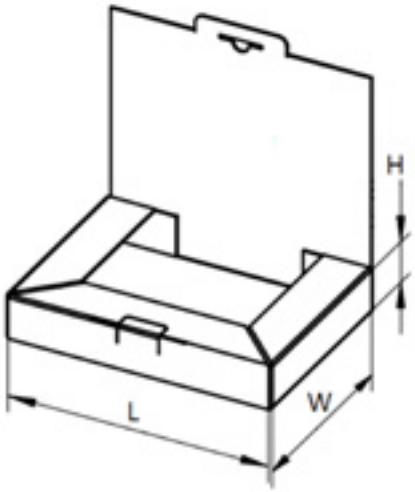


| Name | Dimensions (mm) | | | Weight (kg) |
|---|---|---|---|---|
| | L | W | H | |
| SEK EEV kit | 312 | 226 | 50 | 0.78 |

SANHUA

# ECO-FRIENDLY PRODUCTS & SOLUTIONS

Our target is to provide components and solutions to different industries in order to help the protection of the environment by reducing their energy consumption and increasing their system efficiency.

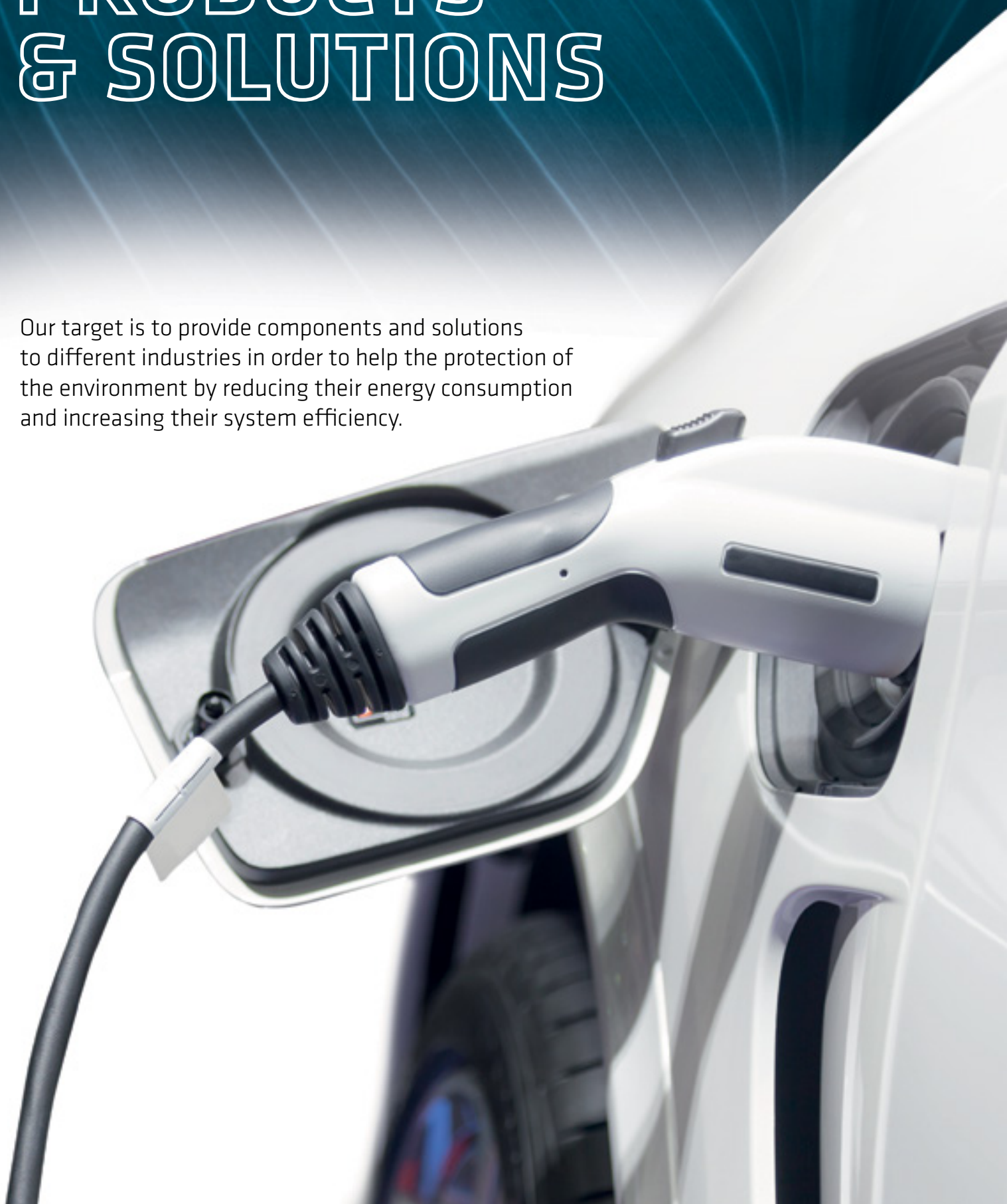

# ELECTRONIC EXPANSION VALVES

*IMPROVES EFFICIENCY UP TO 20%*

*ADVANCED MSS (MINIMUM STABLE SUPERHEAT) CONTROL LOGIC*

SANHUA

*"Yearly SANHUA supplies over 40 million thermostatic and electronic expansion valves to the HVAC&R Automotive industries worldwide."*

*DISCOVER WHY*
**sanhuaeurope.com**

***DPF-TS/S*** *SERIES*

# ELECTRONIC EXPANSION VALVE

TS/S series electronic expansion valves are designed for use in air conditioning and refrigeration systems or in heat pumps. The valve controls the automatic adjustment of refrigerant flow rate and makes the system work under optimized conditions for the purpose of fast cooling or heating, precise temperature control and energy saving. The valve can also be used e.g. for suction line pressure controls. These valves provide bidirectional operation to control the refrigerant flow rate in heating or cooling mode.

## FEATURES

- APPLICABLE FOR REVERSIBLE SYSTEMS: BIDIRECTIONAL FLOW
- SMALLER INSTALLATION SPACE: LOW HEIGHT, SMALL VOLUME, LIGHT WEIGHT
- OPTIMIZED FLOW PATH DESIGN FOR NOISE REDUCTION
- FAST OPERATION, ENERGY SAVING

### GENERAL SPECIFICATIONS

- Applicable for all common HFC, HFO refrigerants such as: R134a, R404A, R407A/F, R407C, R410A, R448A, R449A, R450A, R452A, R513A, R507A

  And also for flammable refrigerants like R32, R290, R1234ze(E), R1234yf
- Cooling capacity: 2 to 121 kW (for R410A)
- 500 steps (full stroke); 32 ± 20 opening steps
- Medium temperature TS min./max.: -40°C / +85°C (duty cycle rate below 50%)
- Ambient temperature min./max.: -30°C / +60°C (duty cycle rate below 50%)
- Relative humidity: 0 to 95% RH
- Certifications: UL/CSA and declaration according to LVD or PED
- Suitable with the EN 60335-2-24 / 2-40 / 2-89

# ELECTRONIC EXPANSION VALVE

## ELECTRICAL PARAMETERS

- Rated voltage: 12V DC(± 10%), rectangular wave
- Actuating mode: 4-phase 8-step permanent magnet stepping motor of direct-acting type
- Excitation mode: 1 ~ 2 phase excitation, unipolar actuation
- Excitation rate:
  - Seat Ø 1,3 to 3,2 mm: 30 to 90pps
  - Seat Ø 4,0 to 6,5 mm: 30 to 40pps
- Activation of self-holding mechanism: Maintain excitation in stop position min. 0,1~1,0 sec.
- Min. motion time from completely open to completely closed:
  - Seat Ø 1,0 to 3,2 mm: 6s @ 90pps
  - Seat Ø 4,0 to 6,5 mm: 13s @ 40pps
- Coil current:
  - Seat Ø 1,0 to 3,2 mm: 260mA/phase (20°C)
  - Seat Ø 4,0 to 6,5 mm: 375mA/phase (20°C)
- Coil resistance:
  - Seat Ø 1,0 to 3,2 mm: 46 ± 3.7 Ω/phase (20°C)
  - Seat Ø 4,0 to 6,5 mm: 32 ± 3.2 Ω/phase (20°C)
- Insulation class of coil: E
- Protection class: IP 67
- Compatible with Sanhua controller SEC series

## GENERAL CHARACTERISTICS

| Valve Model | Part Number[1)] | Design Type | Seat Φ (mm) | Kv ($m^3/h$) | MOP[2)] [Bar] | MOPD Direct[3)] [Bar] | MOPD Rev.[4)] [Bar] |
|---|---|---|---|---|---|---|---|
| DPF(TS1)1.0C-15 | 10130391602 | n | 1,0 | 0,03 | 49 | 35 | ≥25 |
| DPF(TS1)1.0C-16 | 10130390002 | L | 1.0 | 0,03 | | | |
| DPF(TS1)1.3C-21 | 10130389302 | n | 1,3 | 0,05 | | | |
| DPF(TS1)1.3C-22 | 10130392002 | L | 1,3 | 0,05 | | | |
| DPF(TS1)1.65C-36 | 10130391702 | n | 1,65 | 0,08 | | | |
| DPF(TS1)1.65C-38 | 10130395102 | L | 1,65 | 0,08 | | | |
| DPF(TS1)1.8C-69 | 10130391802 | n | 1,8 | 0,1 | | | |
| DPF(TS1)1.8C-68 | 10130390402 | L | 1,8 | 0,1 | | | |
| DPF(TS1)2.0C-33 | 10130392402 | n | 2 | 0,16 | | | |
| DPF(TS1)2.0C-40 | 10130409402 | L | 2 | 0,16 | | | |
| DPF(TS1)2.2C-24 | 10130392702 | n | 2,2 | 0,2 | | | |
| DPF(TS1)2.2C-38 | 10130425202 | L | 2,2 | 0,2 | | | |
| DPF(TS1)2.4C-40 | 10130392602 | n | 2,4 | 0,23 | | | |
| DPF(TS1)2.4C-41 | 10130404802 | L | 2,4 | 0,23 | | | |
| DPF(TS1)3.0C-29 | 10130389902 | L | 3 | 0,39 | | | ≥15 |
| DPF(TS1)3.2C-30 | 10130389502 | L | 3,2 | 0,43 | | | |
| DPF(S03)4.0C-01 | 10130355702 | L | 4 | 0,5 | | | ≥7 |
| DPF(S03)4.5C-01 | 10130035502 | L | 4,5 | 0,7 | | | |
| DPF(S03)5.5C-01 | 10130355802 | L | 5,5 | 0,9 | | | |
| DPF(S03)6.5C-02 | 10130355902 | L | 6,5 | 1,1 | | 30 | |

**Note:** 1) Coil is separated
2) MOP = Maximum Operating Pressure
3) MOPD Direct = Maximum Operating Pressure Difference in Direct flow direction
4) MOPD Rev = Maximum Operating Pressure Difference in Reversible flow direction

# ELECTRONIC EXPANSION VALVE

| Valve Model | Max Cooling Capacity @ 5°C/38°C/5K/5K [kW] | | | | | | | | | | | | |
|---|---|---|---|---|---|---|---|---|---|---|---|---|---|
| | R134a | R513A | R407C | R404A R507A | R410A | R452A | R32 | R290 | R1234yf | R1234ze | R454B | R454C | R455A |
| DPF(TS1)1.0C-15 DPF(TS1)1.0C-16 | 3.1 | 2.7 | 4.3 | 2.9 | 4.8 | 3.1 | 7.0 | 4.2 | 2.3 | 2.5 | 5.5 | 3.6 | 4.0 |
| DPF(TS1)1.3C-21 DPF(TS1)1.3C-22 | 4,5 | 3.8 | 6.2 | 4.2 | 6,9 | 4.5 | 9.9 | 5.8 | 3.2 | 3.4 | 7.6 | 5.0 | 5.5 |
| DPF(TS1)1.65C-36 DPF(TS1)1.65C-38 | 7.6 | 6.4 | 10.4 | 7.1 | 11.6 | 7.6 | 16.7 | 10.0 | 5.6 | 5.9 | 13.1 | 8.6 | 9.5 |
| DPF(TS1)1.8C-69 DPF(TS1)1.8C-68 | 9 | 7.7 | 12.4 | 8.5 | 13.8 | 9.1 | 19.9 | 12.0 | 6.6 | 7.1 | 15.7 | 10.3 | 11.4 |
| DPF(TS1)2.0C-33 DPF(TS1)2.0C-40 | 11.1 | 9.5 | 15.3 | 10.5 | 17.1 | 11.2 | 24.6 | 14.9 | 8.2 | 8.8 | 19.5 | 12.8 | 14.1 |
| DPF(TS1)2.2C-24 DPF(TS1)2.2C-38 | 12 | 10.2 | 16.4 | 11.3 | 18.3 | 12 | 26.4 | 16.0 | 8.9 | 9.4 | 21.0 | 13.8 | 15.2 |
| DPF(TS1)2.4C-40 DPF(TS1)2.4C-41 | 14.1 | 12 | 19.4 | 13.3 | 21.6 | 14.2 | 31.1 | 18.8 | 10.4 | 11.1 | 24.6 | 16.2 | 17.8 |
| DPF(TS1)3.0C-29 | 23.3 | 19.8 | 32.1 | 22 | 35.8 | 23.5 | 51.5 | 31.4 | 17.4 | 18.5 | 41.1 | 27.0 | 29.8 |
| DPF(TS1)3.2C-30 | 25,7 | 21.8 | 35,3 | 24.2 | 39.4 | 25.9 | 56.8 | 34.4 | 19.0 | 20.2 | 45.0 | 29.5 | 32.5 |
| DPF(S03)4.0C-01 | 42.8 | 36.3 | 58.8 | 40.3 | 65.5 | 43.1 | 94.4 | 57.2 | 31.6 | 33.7 | 74.9 | 49.2 | 54.2 |
| DPF(S03)4.5C-01 | 57.2 | 48.6 | 78.7 | 63.9 | 67.7 | 57.6 | 126.3 | 77.1 | 42.6 | 45.4 | 100.9 | 66.3 | 73.1 |
| DPF(S03)5.5C-01 | 66.2 | 56.3 | 91 | 62.4 | 101.5 | 66.7 | 146.2 | 88.6 | 49.0 | 52.2 | 116.0 | 76.2 | 84.0 |
| DPF(S03)6.5C-02 | 80,5 | 68.5 | 110.7 | 75,9 | 123.4 | 81.1 | 177.9 | 108.4 | 59.9 | 63.8 | 141.9 | 93.2 | 102.7 |

For others running points or others refrigerants, please contact your local support or download our selection software – Quick Finder with the link : http://www.SanhuaSelector.com

## FLOW CHARACTERISTIC

# ELECTRONIC EXPANSION VALVE

## DIMENSIONS

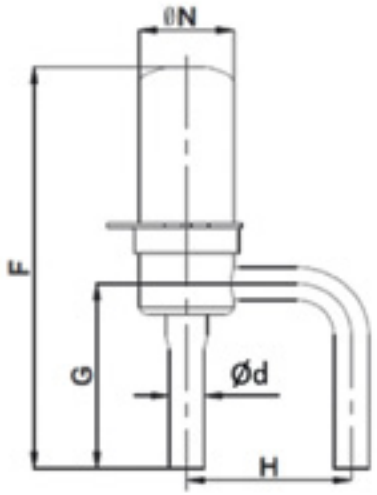


DPF 1.0 ~ 2.4 n Design

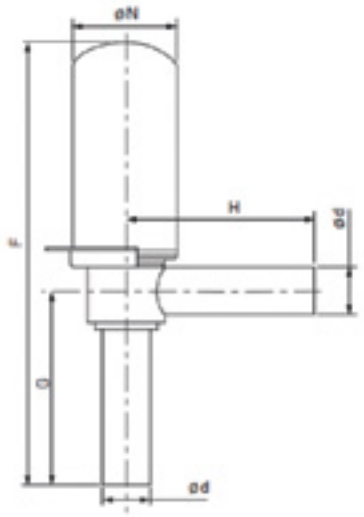


DPF 3.0 ~ 6.5 L Design

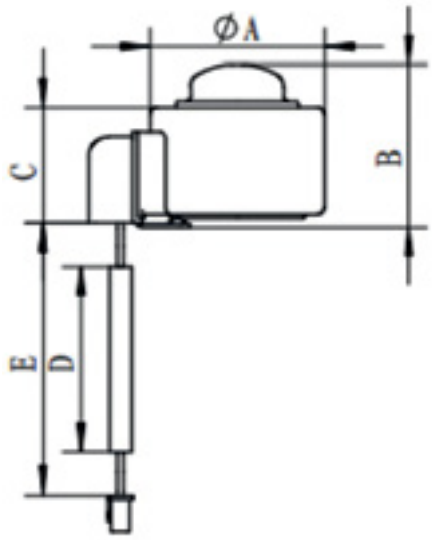


| Valve Model | Dimensions [mm] | | | | | Weight [kg] |
|---|---|---|---|---|---|---|
| | F | G | H | Ød | ØN | |
| DPF 1.0~2.4 n Design | 77 | 36 | 30 | 6.35 | 17.35 | 0.04 |
| DPF 1.0~2.4 L Design | 77 | 36 | 36 | 6.35 | 17.35 | 0.04 |
| DPF 3.0~3.2 | 85 | 43 | 53 | 7.94 | 17.35 | 0.05 |
| DPF 4.0~6.5 | 148 | 64.7 | 63.4 | 15.88 | 35.3 | 0.26 |

| Coil Model | Product Number | Valve Model | Dimensions [mm] | | | | Terminal | Weight [kg] |
|---|---|---|---|---|---|---|---|---|
| | | | ØA | B | C | E | | |
| PQ-M10012-004002 | 10810208802 | DPF 1.0~3.2 | 38.5 | 35.8 | 37.6 | 700 | XHP-5 | 0.12 |
| PQ-M10012-004274 | 10810231902 | | 38.5 | 35.8 | 37.6 | 1500 | XHP-5 | 0.14 |
| PQ-M10012-004213 | 10810232402 | | 38.5 | 35.8 | 37.6 | 2000 | XHP-5 | 0.16 |
| PQ-M10012-004035 | 10810210602 | | 38.5 | 35.8 | 37.6 | 5000 | XHP-5 | 0.30 |
| PQ-M03012-001004 | 10810141302 | DPF 4.0~6.5 | 67.5 | 74.4 | 33.3 | 2000 | XHP-5 | 0.5 |
| PQ-M03012-001041 | 10810171302 | | 67.5 | 74.4 | 33.3 | 5000 | XHP-5 | 0.6 |

***DBF*** *SERIES*

# ELECTRONIC EXPANSION VALVE

DBF series electronic expansion valves are especially designed for commercial air conditioning and heat pump. The balanced flow port design is adopted to realize the accurate bidirectional adjustment of refrigerant flow. The wide adjustment range can be accurately matched with the actual load of the system, so that the system can operate in the best working condition, so as to achieve accurate temperature control, rapid cooling and heating or defrosting and reduce energy consumption.

## FEATURES

- COMPACT INSTALLATION: SAME DPF(T) COILS TYPE, SMALLER SIZE, LIGHTER WEIGHT
- BALANCED FLOW PORT DESIGN, FORWARD AND REVERSE PRESSURE DIFFERENCE UP TO 35BAR
- QUICK ACTION, ENERGY EFFICIENT
- BIDIRECTIONAL FLOW IS SUITABLE FOR REVERSIBLE SYSTEMS SUCH AS HEAT PUMPS
- COMPATIBLE WITH SANHUA SEC CONTROLLERS

### GENERAL SPECIFICATIONS

- Applicable for all common HFCF, HFC and HFO refrigerants such as: R134a, R404A, R407C, R410A, R448A, R449A, R450A, R452A, R454B,R513A, R507A
  And also for flammable refrigerants like R32, R290, R1234ze(E), R1234yf...
- Cooling capacity: 10 ~ 120 KW (for R410A)
- Medium Temperature min./max. :
  -30°C~+80°C (duty cycle rate below 50%)
- Ambient temperature min./max. :
  -30°C~+60°C (duty cycle rate below 50%)
- Relative humidity: 0 to 95% RH
- 500 steps (full stroke); 42 ± 30 opening steps
- Instalation method:
  - Preferably vertical axial angle within ±15°, coil upright
  - Preferably horizontal pipe as inlet and vertical pipe as outlet
- Certifications: UL/CSA and declaration according to LVD or PED
- Suitable with the EN 60335-2-24 / 2-40 / 2-89

# ELECTRONIC EXPANSION VALVE

## ELECTRICAL PARAMETERS

- Rated voltage: 12VDC (± 10%), rectangular wave
- Actuating mode: 4-phase 8-step permanent magnet stepping motor of direct-acting type
- Excitation mode: 1 - 2 phase excitation, uni-polar actuation
- Excitation rate: 30-40pps
- Activation of self-holding mechanism: Maintain excitation in stop position min. 0,1~1,0sec.
- Full stroke time: 13s (40pps)
- Coil current: 260mA/phase (20°C)
- Coil resistance: 46 ± 3.7 Ω/phase (20°C)
- Insulation class of coil: E
- Protection class: IP67
- Compatible with Sanhua controller SEC series

## DBF SERIES TECHNICAL PARAMETERS

| Model | Max Cooling Capacity @5°C/38°C/6K/2K [kW] | | | | | | | | | | Kv [m3/h] | MOP 1) [Bar] | MOPD Direct 2) [Bar] | MOPD Rev. 3) [Bar] |
|---|---|---|---|---|---|---|---|---|---|---|---|---|---|---|
| | R134a | R513A | R407C | R404A R507 | R410A | R452A | R32 | R290 | R1234ze | R454B | | | | |
| DBF04H710 | 41.8 | 35.4 | 57.3 | 38.9 | 63.6 | 41.7 | 92.3 | 56.2 | 33.1 | 73.2 | 0.5 | 49 | 35 | 35 |
| DBF05H710 | 55.9 | 47.4 | 76.7 | 52.0 | 85.1 | 55.7 | 123.5 | 75.2 | 44.4 | 97.9 | 0.7 | | | |
| DBF06H710 | 64.7 | 54.9 | 88.8 | 60.2 | 98.5 | 64.5 | 142.9 | 87.1 | 51.3 | 113.3 | 0.9 | | | |
| DBF07H710 | 78.8 | 66.8 | 108.0 | 73.2 | 119.8 | 78.5 | 173.8 | 105.9 | 62.4 | 137.9 | 1.1 | | | |

**Note:** 1) MOP = Maximum Operating Pressure
2) MOPD Direct = Maximum Operating Pressure Difference in Direct flow direction
3) MOPD Rev = Maximum Operating Pressure Difference in Reversible flow direction

## FLOW CHARACTERISTIC

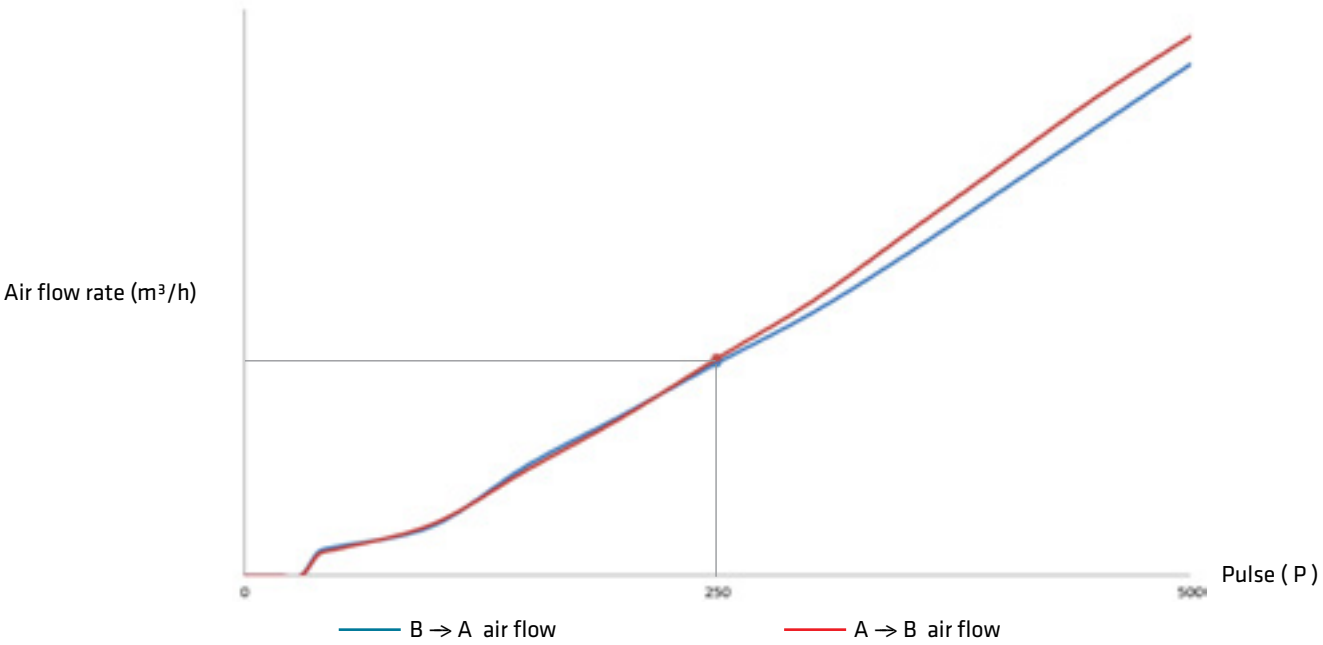

# ELECTRONIC EXPANSION VALVE

## DIMENSIONS

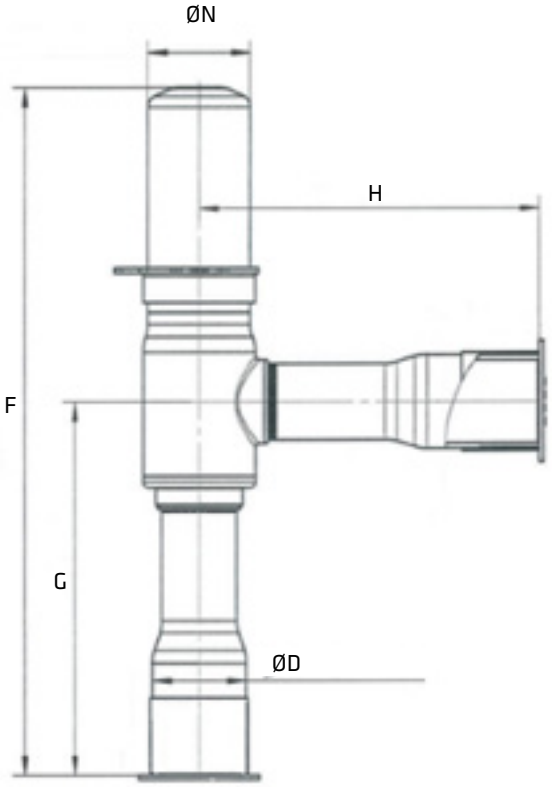


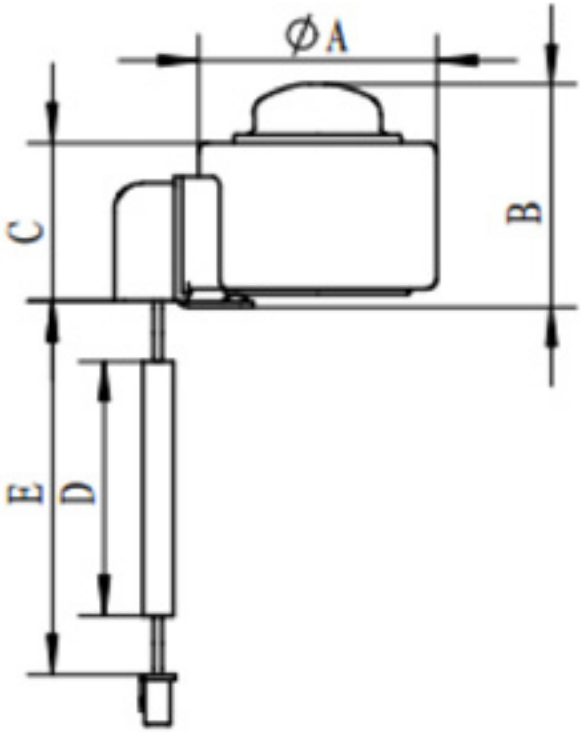

# ELECTRONIC EXPANSION VALVE

| Valve Model | Part Number | Dimensions [mm] | | | | | Weight [g] |
|---|---|---|---|---|---|---|---|
| | | F | G | H | Ø D | Ø N | |
| DBF04H710 | DBFX0000102 | 116 | 63 | 57.5 | 15.88 | 17.35 | 104 |
| DBF05H710 | DBFX0000202 | | | | | | |
| DBF06H710 | DBFX0000302 | | | | | | |
| DBF07H710 | DBFX0000402 | | | | | | |

| Coil Model | Part Number | Dimensions [mm] | | | | Weight | Weight [kg] |
|---|---|---|---|---|---|---|---|
| | | Ø A | B | C | E | | |
| PQ-M10012-004002 | 10810208802 | 38.5 | 35.8 | 37.6 | 700 | XHP-5 | 0.12 |
| PQ-M10012-004274 | 10810210602 | 38.5 | 35.8 | 37.6 | 1500 | XHP-5 | 0.14 |
| PQ-M10012-004213 | 10810232402 | 38.5 | 35.8 | 37.6 | 2000 | XHP-5 | 0.16 |
| PQ-M10012-004035 | 10810231902 | 38.5 | 35.8 | 37.6 | 5000 | XHP-5 | 0.30 |

***LPF*** *SERIES*

# ELECTRONIC EXPANSION VALVE

LPF series Electronic Expansion Valves are especially designed for use in refrigeration systems. Thanks to the soft-sealing seat design, it can be as tight as a solenoid valve once it is completely shut off thus to prevent liquid refrigerant migrate to evaporator or compressor.

## FEATURES

- EXTREMELY HIGH INTERNAL TIGHTNESS, WHICH IS AS GOOD AS WITH SOLENOID VALVES
- BETTER FLOW REGULATION
- COIL WITH IP67 WORKS SAFELY IN EXTREMELY ENVIRONMENT
- APPLICABLE FOR OIL-FREE SYSTEM
- BUILT-IN STRAINER AT INLET
- FLOW DIRECTION: UNI-FLOW
- LPF...T : 90 BAR DESIGN FOR R744 REFRIGERANT AND SUITABLE WITH THE OTHERS REFRIGERANTS

### GENERAL SPECIFICATION

- Applicable for all common HFCF, HFC and HFO refrigerants (such as: R134a, R404A, R407A/F, R407C, R410A, R448A, R449A, R450A, R452A, R513A, R507A and also for flammable refrigerants like R290,R1234ze, R454C, R455A, R1234yf and R744 ($CO_2$)
- 500 steps (full stroke); 32±20 (LPF 03~32)
- Temperature:

| LPF Model | Medium temperature Min/Max | Ambient temperature Min/Max |
|---|---|---|
| LPF45 ~ 62 | -40°C / +70°C (2) | -30°C / +60°C (2) |
| LPF03T ~ 32T | -40°C / +70°C (1) | -40°C / +60°C (1) |

(1)duty cycle rate below 40% / (2)duty cycle rate below 50%

- Relative humidity: 0 to 95% RH
- Pressures:

| LPF Model | MPW | MOPD |
|---|---|---|
| LPF03T ~ 24T | 90 bar | 50 bar |
| LPF30T ~ 32T | 90 bar | 35 bar |
| LPF45 ~ 62 | 49 bar | 35 bar |

- Declaration according to LVD and PED
- Suitable with the EN 60335-2-24 / 2-40 / 2-89

# ELECTRONIC EXPANSION VALVE

## ELECTRICAL PARAMETERS

- Rated voltage: 12V DC(± 10%), rectangular wave
- Excitation mode: 1 - 2 phase excitation, uni-polar actuation

| LPF Model | Excitation rate | Full stroke time |
|---|---|---|
| LPF03T ~ 32T | 30 - 90pps | 6s@ 90pps |
| LPF45 ~ 62 | 30 - 40pps | 13s@ 40pps |

- Coil current: 260mA/phase (20°C)
- Coil resistance: 46 ± 3.7 Ω/phase (20°C)
- Insulation class of coil: E
- Protection class: IP 67
- Compatible with Sanhua controller SEC series

## GENERAL CHARACTERISTICS

*Condition 1: Tc/Te/Sc/SH: 45oC/-10oC/2K/6K (0 °C/-20 °C/2K/6K for R744)*

| Valve Model | Seat Φ (mm) | Kv ($m^3/h$) | Maximal Cooling Capacity [kW] | | | | | | | |
|---|---|---|---|---|---|---|---|---|---|---|
| | | | R134a | R404A | R407F | R448A | R449A | R450A | R452A | R513A |
| LPF03T | 1.0 | 0.009 | 0.90 | 0.80 | 1.28 | 1.14 | 1.12 | 0.79 | 0.84 | 0.74 |
| LPF05T | 1.0 | 0.014 | 1.39 | 1.23 | 1.97 | 1.75 | 1.72 | 1.21 | 1.29 | 1.15 |
| LPF08T | 1.0 | 0.025 | 2.3 | 2.0 | 3.2 | 2.8 | 2.8 | 2.0 | 2.1 | 1.84 |
| LPF10T | 1.0 | 0.04 | 3.6 | 3.2 | 5.1 | 4.6 | 4.5 | 3.2 | 3.4 | 3.0 |
| LPF14T | 1.4 | 0.08 | 6.9 | 6.1 | 9.7 | 8.7 | 8.5 | 6.0 | 6.4 | 5.7 |
| LPF18T | 1.8 | 0.12 | 9.5 | 8.4 | 13.5 | 12.0 | 11.8 | 8.3 | 8.8 | 7.9 |
| LPF24T | 2.4 | 0.20 | 13.0 | 11.5 | 18.4 | 16.4 | 16.1 | 11.3 | 12.1 | 10.8 |
| LPF30T | 3.0 | 0.27 | 18.4 | 16.2 | 26.0 | 23.3 | 22.7 | 16.0 | 17.1 | 15.2 |
| LPF32T | 3.2 | 0.30 | 20.2 | 17.8 | 28.5 | 25.5 | 24.9 | 17.6 | 18.7 | 16.6 |
| LPF45 | 4.5 | 0.5 | 45.3 | 39.9 | 64.0 | 57.1 | 55.9 | 39.5 | 41.9 | 37.3 |
| LPF52 | 5.2 | 0.7 | 60.6 | 53.4 | 85.6 | 76.3 | 74.8 | 52.8 | 56.0 | 49.9 |
| LPF55 | 5.5 | 0.9 | 70.2 | 61.8 | 99.1 | 88.4 | 86.6 | 61.1 | 64.8 | 57.7 |
| LPF62 | 6.2 | 1.1 | 85.3 | 75.2 | 102.5 | 107.5 | 105.3 | 74.4 | 78.9 | 70.2 |

| Valve Model | Seat Φ (mm) | Kv ($m^3/h$) | Maximal Cooling Capacity [kW] | | | | | | | |
|---|---|---|---|---|---|---|---|---|---|---|
| | | | R454B | R454C | R455A | R1234yf | R1234ze | R290 | R410A | R744 |
| LPF03T | 1.0 | 0.009 | 1.62 | 0.98 | 1.06 | 0.63 | 0.70 | 1.21 | 1.39 | 1.89 |
| LPF05T | 1.0 | 0.014 | 2.49 | 1.51 | 1.64 | 0.98 | 1.08 | 1.86 | 2.14 | 2.91 |
| LPF08T | 1.0 | 0.025 | 4.0 | 2.4 | 2.6 | 1.6 | 1.7 | 3.0 | 3.4 | 4.7 |
| LPF10T | 1.0 | 0.04 | 6.5 | 3.9 | 4.3 | 2.6 | 2.8 | 4.9 | 5.6 | 7.6 |
| LPF14T | 1.4 | 0.08 | 12.4 | 7.5 | 8.1 | 4.8 | 5.3 | 9.2 | 10.6 | 14.4 |
| LPF18T | 1.8 | 0.12 | 17.1 | 10.3 | 11.2 | 6.7 | 7.4 | 12.8 | 14.6 | 19.9 |
| LPF24T | 2.4 | 0.2 | 23.4 | 14.1 | 15.3 | 9.2 | 10.1 | 17.5 | 20.0 | 27.2 |
| LPF30T | 3.0 | 0.27 | 33.0 | 19.9 | 21.7 | 12.9 | 14.2 | 24.7 | 28.3 | 38.5 |
| LPF32T | 3.2 | 0.30 | 36.2 | 21.8 | 23.7 | 14.2 | 15.6 | 27.0 | 31.0 | 42.1 |
| LPF45 | 4.5 | 0.5 | 81.1 | 49.0 | 53.3 | 31.7 | 35.0 | 60.6 | 69.5 | - |
| LPF52 | 5.2 | 0.7 | 108.5 | 65.5 | 71.2 | 42.5 | 46.8 | 81.1 | 93.0 | - |
| LPF55 | 5.5 | 0.9 | 125.5 | 75.8 | 82.5 | 49.2 | 54.2 | 93.9 | 107.6 | - |
| LPF62 | 6.2 | 1.1 | 152.7 | 92.3 | 100.3 | 59.8 | 65.9 | 114.2 | 130.9 | - |

# ELECTRONIC EXPANSION VALVE

*Condition 2: Tc/Te/Sc/SH: 45°C/-35°C/2K/6K (-10°C/-40°C/2K/6K for R744)*

| Valve Model | Seat Φ (mm) | Kv ($m^3/h$) | Maximal Cooling Capacity [kW] | | | | | | | |
|---|---|---|---|---|---|---|---|---|---|---|
| | | | R134a | R404A | R407F | R448A | R449A | R450A | R452A | R513A |
| LPF03T | 1.0 | 0.009 | 0.85 | 0.73 | 1.23 | 1.08 | 1.06 | 0.72 | 0.76 | 0.68 |
| LPF05T | 1.0 | 0.014 | 1.31 | 1.13 | 1.90 | 1.67 | 1.63 | 1.11 | 1.18 | 1.05 |
| LPF08T | 1.0 | 0.025 | 2.1 | 1.8 | 3.1 | 2.7 | 2.6 | 1.8 | 1.9 | 1.7 |
| LPF10T | 1.0 | 0.04 | 3.4 | 3.0 | 5.0 | 4.4 | 4.3 | 2.9 | 3.1 | 2.7 |
| LPF14T | 1.4 | 0.08 | 6.5 | 5.6 | 9.4 | 8.3 | 8.1 | 5.5 | 5.8 | 5.2 |
| LPF18T | 1.8 | 0.12 | 9.0 | 7.7 | 13.0 | 11.4 | 11.2 | 7.6 | 8.0 | 7.2 |
| LPF24T | 2.4 | 0.2 | 12.3 | 10.6 | 17.8 | 15.6 | 15.3 | 10.5 | 11.0 | 9.9 |
| LPF30T | 3.0 | 0.27 | 17.4 | 15.0 | 25.1 | 22.1 | 21.6 | 14.8 | 15.6 | 13.9 |
| LPF32T | 3.2 | 0.30 | 19.0 | 16.4 | 27.5 | 24.2 | 23.7 | 16.2 | 17.0 | 15.3 |
| LPF45 | 4.5 | 0.5 | 42.6 | 36.8 | 61.7 | 54.3 | 53.1 | 36.3 | 38.3 | 34.2 |
| LPF52 | 5.2 | 0.7 | 57.0 | 49.2 | 82.6 | 72.7 | 71.7 | 48.5 | 51.2 | 45.8 |
| LPF55 | 5.5 | 0.9 | 66.0 | 57.0 | 95.6 | 84.1 | 82.2 | 56.2 | 59.2 | 53.0 |
| LPF62 | 6.2 | 1.1 | 80.3 | 69.3 | 116.3 | 102.3 | 100.0 | 68.3 | 72.1 | 64.5 |

| Valve Model | Seat Φ (mm) | Kv ($m^3/h$) | Maximal Cooling Capacity [kW] | | | | | | | |
|---|---|---|---|---|---|---|---|---|---|---|
| | | | R454B | R454C | R455A | R1234yf | R1234ze | R290 | R410A | R744 |
| LPF03T | 1.0 | 0.009 | 1.63 | 0.90 | 0.98 | 0.56 | 0.63 | 1.16 | 1.39 | 2.18 |
| LPF05T | 1.0 | 0.014 | 2.51 | 1.39 | 1.51 | 0.87 | 0.98 | 1.79 | 2.14 | 3.36 |
| LPF08T | 1.0 | 0.025 | 4.0 | 2.2 | 2.4 | 1.4 | 1.6 | 2.9 | 3.5 | 5.4 |
| LPF10T | 1.0 | 0.04 | 6.6 | 3.6 | 4.0 | 2.3 | 2.6 | 4.7 | 5.6 | 8.8 |
| LPF14T | 1.4 | 0.08 | 12.5 | 6.9 | 7.5 | 4.3 | 4.8 | 8.8 | 10.6 | 16.6 |
| LPF18T | 1.8 | 0.12 | 17.2 | 9.5 | 10.4 | 6.0 | 6.7 | 12.2 | 14.6 | 23.0 |
| LPF24T | 2.4 | 0.2 | 23.5 | 13.0 | 14.2 | 8.2 | 9.2 | 16.7 | 20.0 | 31.5 |
| LPF30T | 3.0 | 0.27 | 33.3 | 18.4 | 20.0 | 11.6 | 12.9 | 23.6 | 28.3 | 44.5 |
| LPF32T | 3.2 | 0.30 | 36.4 | 20.2 | 21.9 | 12.7 | 14.2 | 25.9 | 30.9 | 48.7 |
| LPF45 | 4.5 | 0.5 | 81.7 | 45.2 | 49.1 | 28.3 | 31.8 | 58.1 | 69.4 | - |
| LPF52 | 5.2 | 0.7 | 109.3 | 60.5 | 65.8 | 37.9 | 42.5 | 77.7 | 92.9 | - |
| LPF55 | 5.5 | 0.9 | 126.6 | 70.1 | 76.1 | 43.8 | 49.2 | 89.9 | 107.5 | - |
| LPF62 | 6.2 | 1.1 | 153.9 | 85.2 | 92.6 | 53.3 | 59.9 | 109.4 | 130.8 | - |

**Note:** The Max capacity is given for full opened position

# ELECTRONIC EXPANSION VALVE

| Valve Model | U11 Code Multi-Pack | Dimensions | | | | | Weight (g) |
|---|---|---|---|---|---|---|---|
| | | F | G | H | Øe Inlet | Ød Outlet | |
| LPF03T-001 | 10136007702 | | | | 3/8 | 1/2 | 60 |
| LPF03T-002 | 10136010302 | | | | 6mm | 10mm | 49.2 |
| LPF05T-001 | 10136007802 | 88.5 | 45.8 | 49 | 3/8 | 1/2 | 60 |
| LPF05T-002 | 10136010502 | | | | 6mm | 10mm | 49.2 |
| LPF08T-001 | 10136005402 | | | | 3/8 | 1/2 | 60 |
| LPF08T-002 | 10136006402 | 84.5 | 41.8 | 45 | 1/4 | 1/4 | 45.5 |
| LPF08T-003 | 10136008202 | | | 49 | 10mm | 12mm | 59.8 |
| LPF08T-004 | 10136010402 | | | 49 | 6mm | 10mm | 49.2 |
| LPF10T-002 | 10136005502 | | | 49 | 3/8 | 1/2 | 60 |
| LPF10T-003 | 10136005602 | | | 45 | 1/4 | 3/8 | 49.2 |
| LPF10T-004 | 10136006502 | | | 49 | 10mm | 12mm | 59.9 |
| LPF10T-005 | 10136006602 | | | 45 | 6mm | 10mm | 49.2 |
| LPF14T-002 | 10136005702 | | | 49 | 3/8 | 1/2 | 60 |
| LPF14T-003 | 10136005802 | | | 45 | 1/4 | 3/8 | 49.2 |
| LPF14T-004 | 10136006702 | | | 49 | 10mm | 12mm | 59.9 |
| LPF14T-005 | 10136006802 | 88.5 | 45.8 | 45 | 6mm | 10mm | 49.2 |
| LPF18T-002 | 10136005902 | | | 49 | 3/8 | 1/2 | 59.9 |
| LPF18T-003 | 10136006902 | | | 49 | 10mm | 12mm | 59.8 |
| LPF24T-002 | 10136006002 | | | 49 | 3/8 | 1/2 | 59.9 |
| LPF24T-003 | 10136007002 | | | 49 | 10mm | 12mm | 59.8 |
| LPF30T-001 | 10136006102 | | | 49 | 3/8 | 1/2 | 59.8 |
| LPF30T-002 | 10136007102 | | | 49 | 10mm | 12mm | 59.7 |
| LPF32T-001 | 10136006202 | | | 49 | 3/8 | 1/2 | 59.8 |
| LPF32T-002 | 10136006302 | | | 45 | 1/4 | 3/8 | 49 |
| LPF32T-003 | 10136007202 | | | 49 | 10mm | 12mm | 59.7 |
| LPF45-100 | LPFX0001002 | | | | 5/8 | 5/8 | 104 |
| LPF52-100 | LPFX0001102 | 116 | 62.5 | 57.2 | 1/4 | 1/4 | 104 |
| LPF55-100 | LPFX0001202 | | | | 3/8 | 1/2 | 104 |
| LPF62-100 | LPFX0001302 | | | | 1/4 | 1/4 | 104 |

# ELECTRONIC EXPANSION VALVE

## DIMENSIONS

*(Unit is mm)*

ØN = 17.35 mm

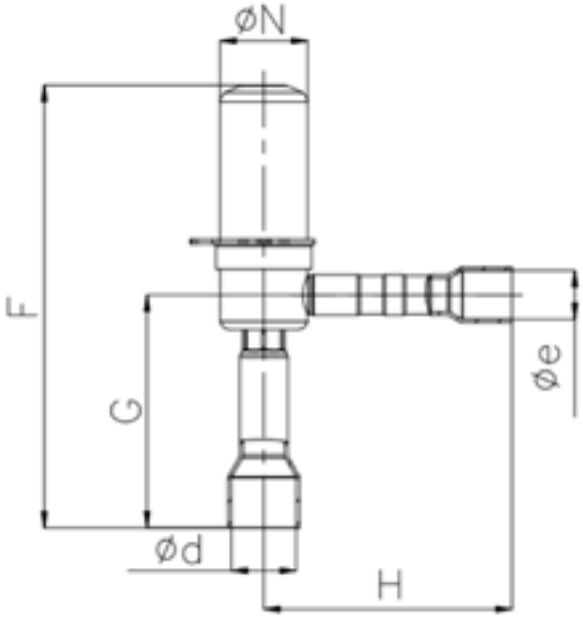


## FLOW CHARACTERISTIC (EQUAL PERCENTAGE)

LPF-T 03~32

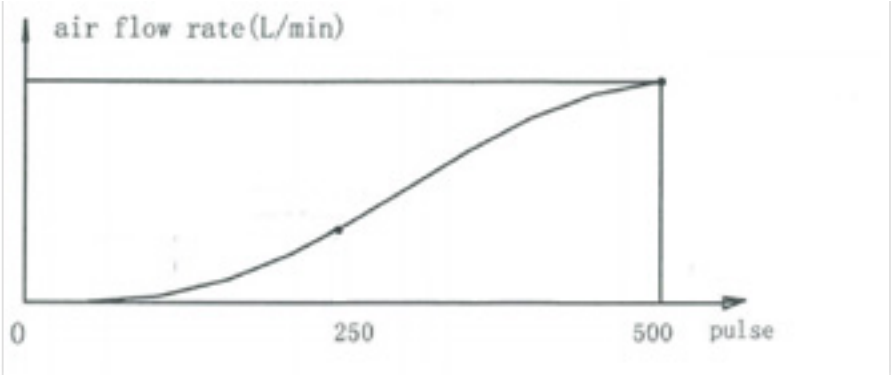


LPF 45~62

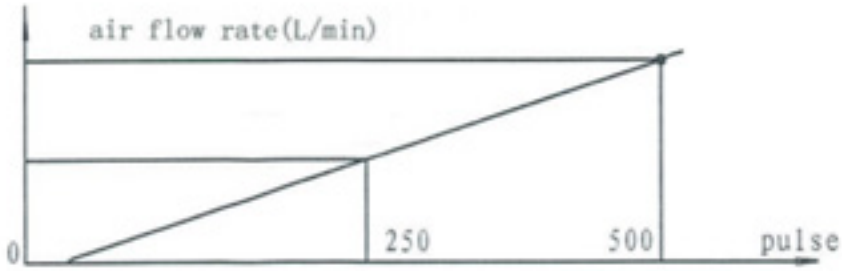

# ELECTRONIC EXPANSION VALVE

*The coil is separated*
*(Unit is mm)*

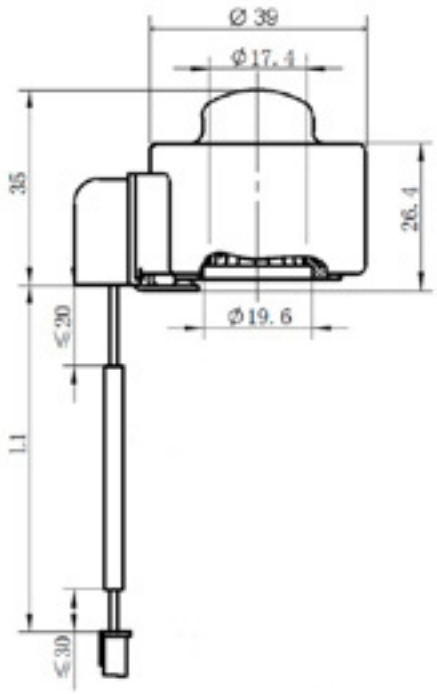


| Coil Model | Coil Code number | Coil Dimensions [mm] | Weight (g) |
|---|---|---|---|
| | | L1 | |
| PQ-M24012-000007 | 10810127602 | 1500 | 140 |
| PQ-M24012-000008 | 10810129502 | 3000 | |
| PQ-M24012-000009 | 10810129602 | 6000 | |
| PQ-M24012-000010 | 10810129702 | 9000 | |

***SECR03*** *SERIES (REVO)*

# REFRIGERATED CABINET CONTROLLER SECR03 (REVO)

## FEATURES

- COMPLETE CABINET CONTROLLER WITH INTEGRATED CONTROL ON EEV, CABINET TEMPERATURE, DEFROST, EVAPORATING FAN AND ADDITIONNAL FUNCTIONS
- INTERCOM FOR MULTIPLE CONTROLLERS SHARED SIGNAL
- DUAL TEMPERATURE MODE FOR MULTIPLE OPERATING CONDITIONS
- ENERGY EFFICIENT, ACHIEVING THE MOST EFFICIENT USE OF THE EVAPORATOR

### GENERAL SPECIFICATIONS

- Applicable for various refrigerants including propane and $CO_2$.
- Operating temperature: -30°C ~ 55°C
- Storage temperature: -30°C ~ 55°C
- Relative humidity: ≤95% RH
- Certification: CE Declaration according to EMC
- Installation method: DIN35 rail
- Compatible with Sanhua DPF and LPF-T expansion valves

### ELECTRICAL PARAMETERS

- Power supply: 24 Vac +10%/-15%, 50/60 Hz 24 Vdc+10%/-15%, Class II
- Requested transformer: >15 W (24 Vdc) / >25 VA (24 Vac)
- Connection: Pluggable terminal (M3) Torque 0.5 N.m, current ≤ 3 A (220 V)

  Min / Max wire diameter 0.34 ~ 2.5 $mm^2$ XHP terminal (EEV and sensors)
- Communication: RS485, Remote Display, InterCom

# REFRIGERATED CABINET CONTROLLER

## MODEL DESIGNATION LEGEND

| NO. 1 2 3 | | Model Designation Legend |
|---|---|---|
| **SEC**R03-R2 | → | SANHUA Electronic Controller |
| SEC**R03**-R2 | → | Revo series refrigerated cabinet controller |
| SECR03-**R2** | → | R2 is the controller version |

## ORDERING METHOD

All the models are compatible with the main refrigerants on the market:
R404A, R410A, R134a, R407C, R507, R1234ze, R1234yf, R290, R450A, R513A, R448A, R449A, R452A, R744 ($CO_2$), R744a ($N_2O$), R32, R245fa, R23, R407A, R407F, R124, R717, R407H, R454C, R455A, R454B, R452B, R600A, R600, R454A.

| Model | Part Number | Details |
|---|---|---|
| SECR03-R2 | 10680001902 | Cabinet controller |
| MD01-01 | 10680004802 | Remote display |
| YCQB02H01 (HC) | 10185001502 | 0-20 bar, 0.5-3.5 V, 1/4” soldering, 2 m cable (XHP) |
| YCQB02H18 (HC) | 10185015402 | 0-20 bar, 0.5-3.5 V, 1/4” soldering, 4.9 m cable (XHP) |
| YCQB02L12 (HFC) | 10185015502 | 0-20 bar, 0.5-3.5 V, Thread: SAE-1/4" 7/16-20 UNF-2B, 2 m cable (XHP) |
| YCQB02L28 (HFC) | 10185015602 | 0-20 bar, 0.5-3.5 V, Thread: SAE-1/4" 7/16-20UNF-2B, 4.9 m cable (XHP) |
| YCQB09L02 (CO2) | 10185044102 | 0-90 bar, 0.5-3.5 V, G 1/4, 2 m cable (XHP) |
| YCQB06L01 (CO2) | 10185067202 | 0-60 bar, 0.5-3.5 V, Flare 7/16-20 UNF-2B (Packard) - XHP/Packard cable needed |
| YCQB02-013251 | 20185108201 | 2 m cable length XHP/Packard for YCQB & YCQC pressure sensors |
| YCQB02-013252 | 20185108101 | 5 m cable length XHP/Packard for YCQB & YCQC pressure sensors |
| YCQB02-013253 | 20185108001 | 9 m cable length XHP/Packard for YCQB & YCQC pressure sensors |
| NTC2A1 | 10665000102 | Temperature Sensor (NTC 5 KΩ), 2m cable (XHP) |
| NTC5A1 | 10665000202 | Temperature Sensor (NTC 5 KΩ), 5m cable (XHP) |
| NTC9A1 | 10665000402 | Temperature Sensor (NTC 5 KΩ), 9m cable (XHP) |
| LPF-T | LPF-T Data sheet | LPF-T Electronic Expansion Valve |

**Note:** The temperature & pressure sensors should be ordered separately.
Other pressures transmitters are available on the YCQ datasheet.

# REFRIGERATED CABINET CONTROLLER

## SENSOR INFORMATION

| Items | Description | |
|---|---|---|
| Temperature sensor | Sensor type | NTC 5 KΩ |
| | Cable specification | 2 / 5 or 9 m × 0.5 mm² |
| | Protection level | IP 67 |
| | Accuracy | ±0.3°C (at 25°C) |
| | Operating temperature range | -55°C ~ 85°C |
| Pressure Transmitter | Power Supply | YCQB: (5±0.25) VDC |
| | Output signal | YCQB: (0.5 ~ 3.5) VDC |
| | Pressure range accuracy | ±2.0% F.S. (-30°C/+85°C) |
| | Protection level | IP 67 |
| | Connection | Soldering: 1/4" or<br>Thread: 1/4"SAE 7/16-20 UNF |

# REFRIGERATED CABINET CONTROLLER

## INSTALLATION

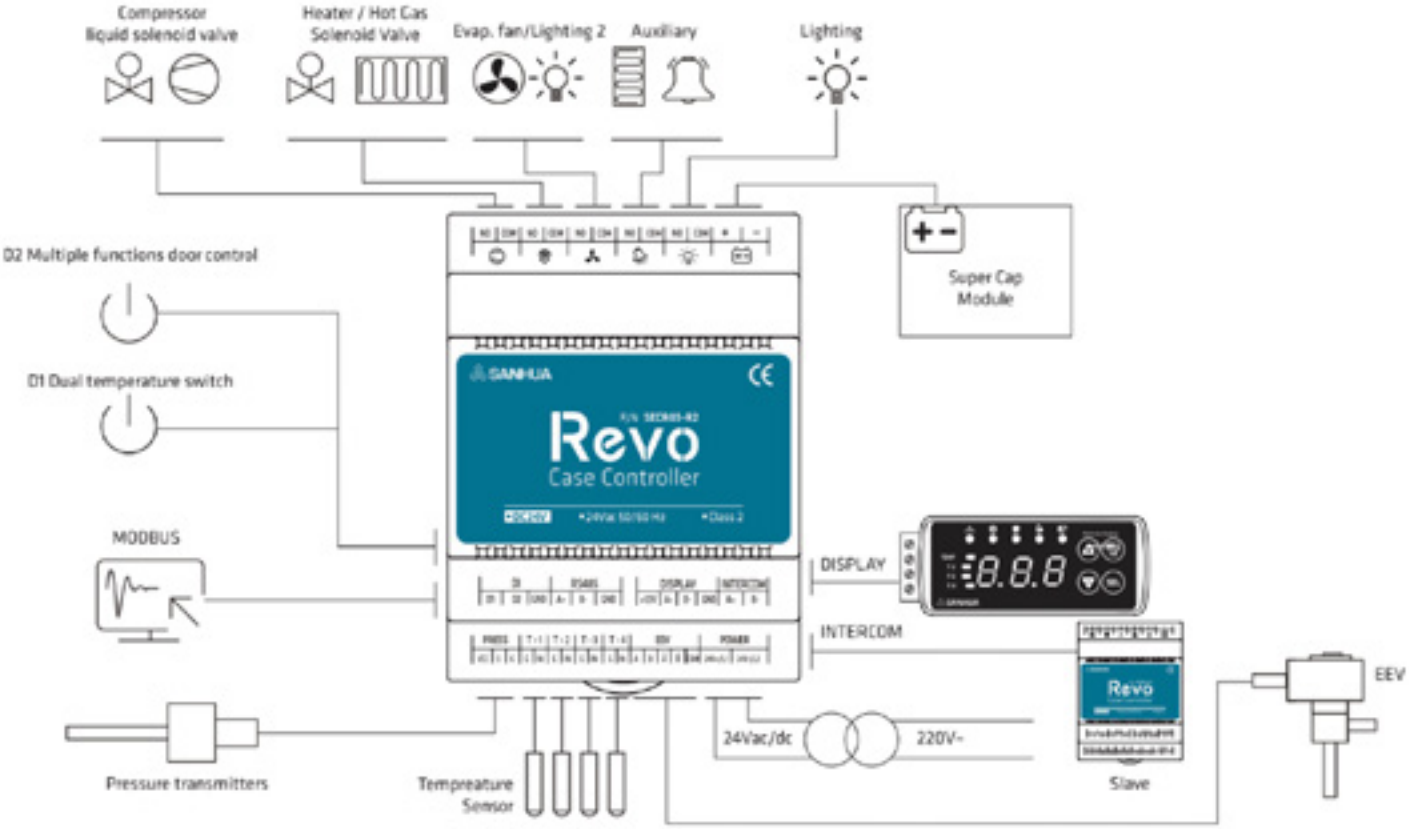


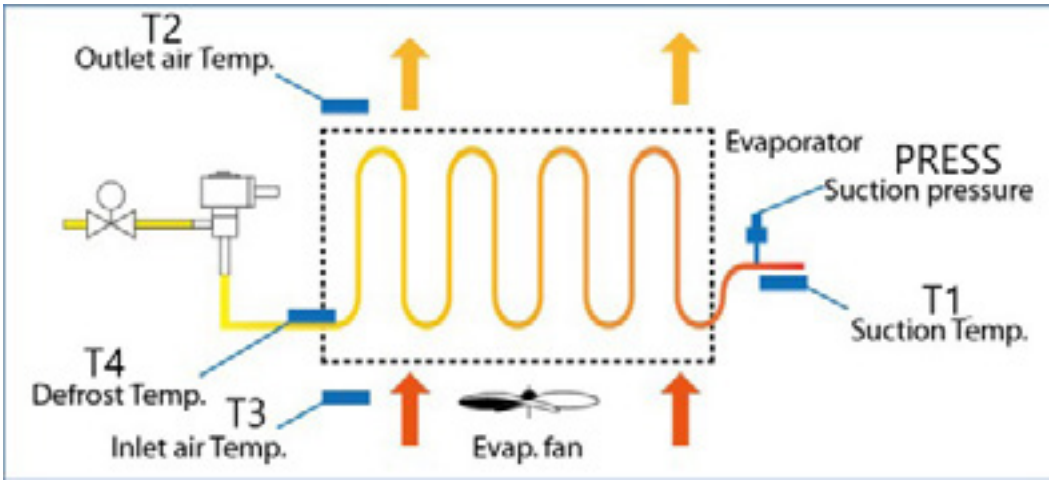

# REFRIGERATED CABINET CONTROLLER

## DIMENSIONS

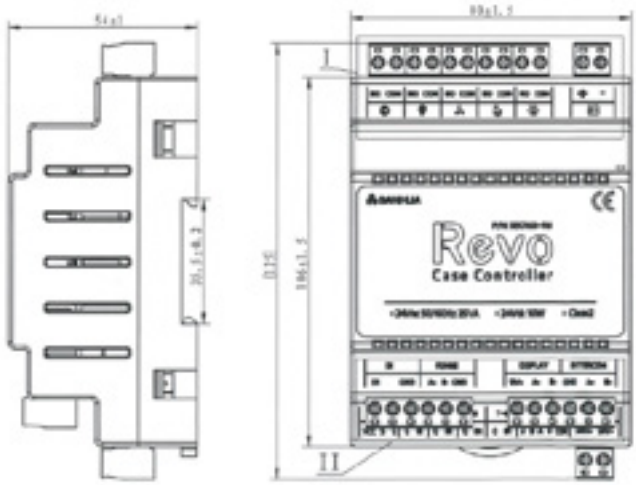


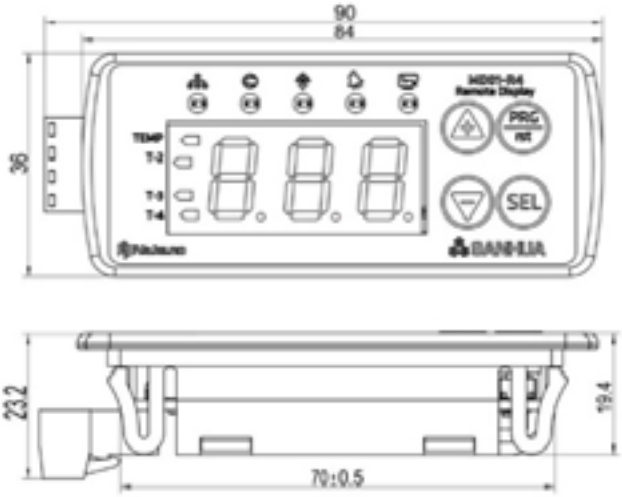


## ACCESSORIES

### Transformer

| Item | Description | | |
|---|---|---|---|
| Transformer | Supply Voltage | 100 ~ 240 VAC | 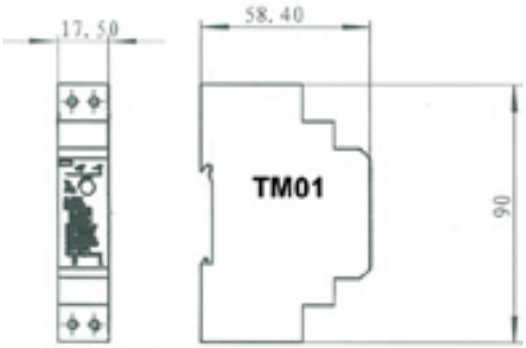  |
| | Output Voltage | From 21.6 to 29 V, Set at 24 VDC | |
| | Output current | 0.63 A | |
| | Operating Temperature | -30 ~ +70°C | |
| | Mounting | DIN 35 mm | |

| Model | Part number | Output current |
|---|---|---|
| TM01 | 20680008002 | 0.63 A |

# REFRIGERATED CABINET CONTROLLER

## ULTRACAPACITOR

| Item | Description |
|---|---|
| Model | SP02 |
| Dimension | 72 (W) mm<br>x 110 (H) mm<br>x 31.7 (D) mm |
| Voltage input | 24 Vac, +10%/-15%, 50/60 HZ<br>24 Vdc, +10%/-15% |
| Voltage output | 22.5~23.5 V at Charging (24Vdc input),<br>14~16 V at discharging |
| Discharging time | ≥25 s<br>(Load current 400 mA) |
| Rated power | Max 8 W (24 Vdc)<br>or 26 VA (24 Vac) |
| Operation | -30~+55°C, ≤95% RH<br>(Non-condensing) |
| Storage | 30~+55°C, ≤95% RH<br>(Non-condensing) |

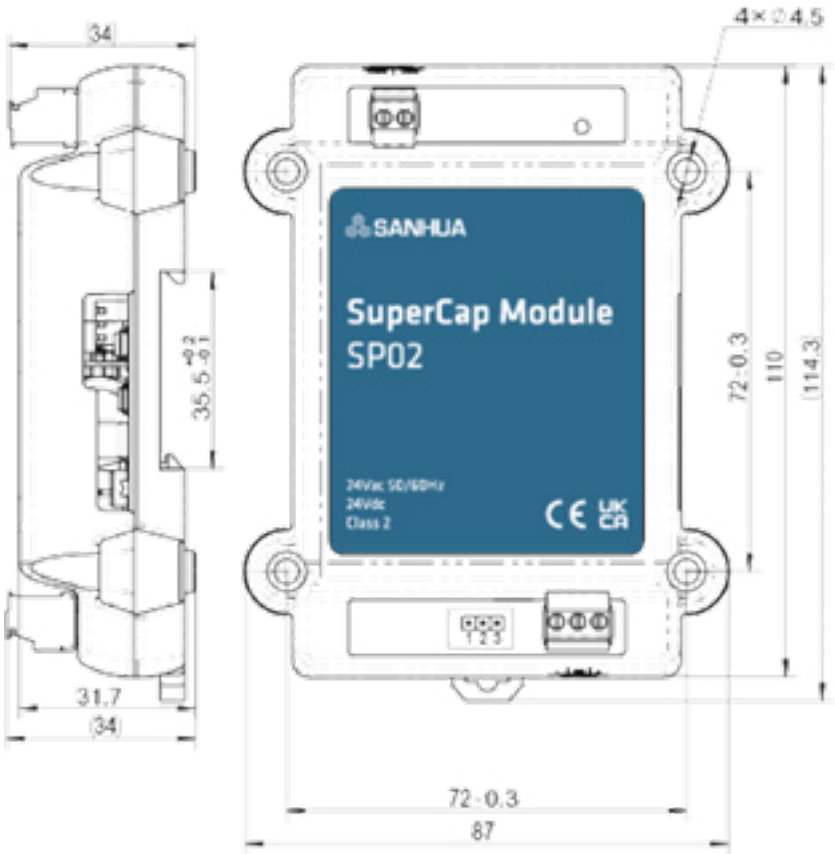


| Model | Part number |
|---|---|
| SP02 | 10680004702 |

***SECR04*** *SERIES (REVO+)*

# REFRIGERATED CABINET CONTROLLER SECR04 (REVO+)

## FEATURES

- COMPLETE CABINET CONTROL WITH INTEGRATED CONTROL ON VARIABLE SPEED DRIVE, EEV, CABINET TEMPERATURE, DEFROST, EVAPORATING FAN AND LIGHTING
- INTERCOM FOR MULTIPLE CONTROLLERS SHARED SIGNAL
- DUAL TEMPERATURE MODE FOR MULTIPLE OPERATING CONDITIONS
- ENERGY EFFICIENT, ACHIEVING THE MOST EFFICIENT USE OF THE EVAPORATOR

### GENERAL SPECIFICATIONS

- Applicable for various refrigerants including propane and $CO_2$.
- Operating temperature: -30°C ~ 55°C
- Storage temperature: -30°C ~ 55°C
- Relative humidity: ≤95% RH
- Certification: CE Declaration according to EMC
- Installation method: DIN35 rail
- Compatible with Sanhua DPF and LPF-T expansion valves
- Compatible with Sanhua SD2 inverters

### ELECTRICAL PARAMETERS

- Power supply: 24 Vac +10%/-15%, 50/60 Hz 24 Vdc+10%/-15%, Class II
- Requested transformer: >15 W (24 Vdc) / >25 VA (24 Vac)
- Connection: Pluggable terminal (M3) Torque 0.5 N.m, current ≤ 3 A (220 V)
- Min / Max wire diameter 0.34 ~ 2.5 $mm^2$ XHP terminal (EEV and sensors)
- Communication: RS485, Remote Display, InterCom

# REFRIGERATED CABINET CONTROLLER

## MODEL DESIGNATION LEGEND

| NO. 1 2 3 | | Model Designation Legend |
|---|---|---|
| **SEC**R04-R0 | → | SANHUA Electronic Controller |
| SEC**R04**-R0 | → | Revo + series refrigerated cabinet controller |
| SECR04-**R0** | → | R0 is the controller version |

## ORDERING METHOD

All the models are compatible with the main refrigerants on the market:
R404A, R410A, R134a, R407C, R507, R1234ze, R1234yf, R290, R450A, R513A, R448A, R449A, R452A, R744 ($CO_2$), R744a ($N_2O$), R32, R245fa, R23, R407A, R407F, R124, R717, R407H, R454C, R455A, R454B, R452B, R600A, R600, R454A.

| Model | Part Number | Details |
|---|---|---|
| SECR04-R0 | 10680004602 | REVO+ Cabinet controller |
| MD01-04 | 10680006002 | Remote display |
| YCQB02H01 (HC) | 10185001502 | 0-20 bar, 0.5-3.5 V, 1/4" soldering, 2 m cable (XHP) |
| YCQB02H18 (HC) | 10185015402 | 0-20 bar, 0.5-3.5 V, 1/4" soldering, 4.9 m cable (XHP) |
| YCQB02L12 (HFC) | 10185015502 | 0-20 bar, 0.5-3.5 V, Thread: SAE-1/4" 7/16-20UNF-2B, 2 m cable (XHP) |
| YCQB02L28 (HFC) | 10185015602 | 0-20 bar, 0.5-3.5 V, Thread: SAE-1/4" 7/16-20UNF-2B, 4.9 m cable (XHP) |
| YCQB09L02 (CO2) | 10185044102 | 0-90 bar, 0.5-3.5 V, G 1/4, 2 m cable (XHP) |
| YCQB06L01 (CO2) | 10185067202 | 0-60 bar, 0.5-3.5 V, Flare 7/16-20UNF-2B (Packard) – XHP/Packard cable needed |
| YCQB02-013251 | 20185108201 | 2 m cable length XHP/Packard for YCQB & YCQC pressure sensors |
| YCQB02-013252 | 20185108101 | 5 m cable length XHP/Packard for YCQB & YCQC pressure sensors |
| YCQB02-013253 | 20185108001 | 9 m cable length XHP/Packard for YCQB & YCQC pressure sensors |
| NTC2A1 | 10665000102 | Temperature Sensor (NTC 5 KΩ), 2 m cable (XHP) |
| NTC5A1 | 10665000202 | Temperature Sensor (NTC 5 KΩ), 5 m cable (XHP) |
| NTC9A1 | 10665000402 | Temperature Sensor (NTC 5 KΩ), 9 m cable (XHP) |
| NTC2B1 | 10665000702 | Discharge temperature sensor (NTC 50 K), 2 m cable (XHP) |
| NTC3B1 | 10665000802 | Discharge temperature sensor (NTC 50 K), 3 m cable (XHP) |
| LPF-T | LPF-T Data sheet | LPF-T Electronic Expansion Valve |
| SD2 | SD2 Data sheet | SD2 inverter to be selected according to the compressor |

**Note:** The temperature & pressure sensors should be ordered separately.
Other pressures transmitters are available on the YCQ datasheet.

# REFRIGERATED CABINET CONTROLLER

## SENSOR INFORMATION

| Items | Description | |
|---|---|---|
| Temperature sensor | Sensor type | NTC 5 KΩ & 50 KΩ (discharge) |
| | Cable specification | 2 m (5 KΩ, 50 KΩ) / 3 m (5 KΩ, 50 KΩ) / 5 m (5 KΩ) or 9 m (5 KΩ) × 0.5 mm² |
| | Protection level | IP 67 |
| | Accuracy | ±0.3°C (at 25°C) |
| | Operating temperature range | -55°C ~ 85°C |
| Pressure Transmitter | Power Supply | YCQB: (5±0.25) VDC |
| | Output signal | YCQB: (0.5 ~ 3.5) VDC |
| | Pressure range accuracy | ±2.0% F.S. (-30°C/+85 °C) |
| | Protection level | IP 67 |
| | Connection | Soldering: 1/4" or<br>Thread: 1/4"SAE 7/16-20UNF |

# REFRIGERATED CABINET CONTROLLER

## INSTALLATION

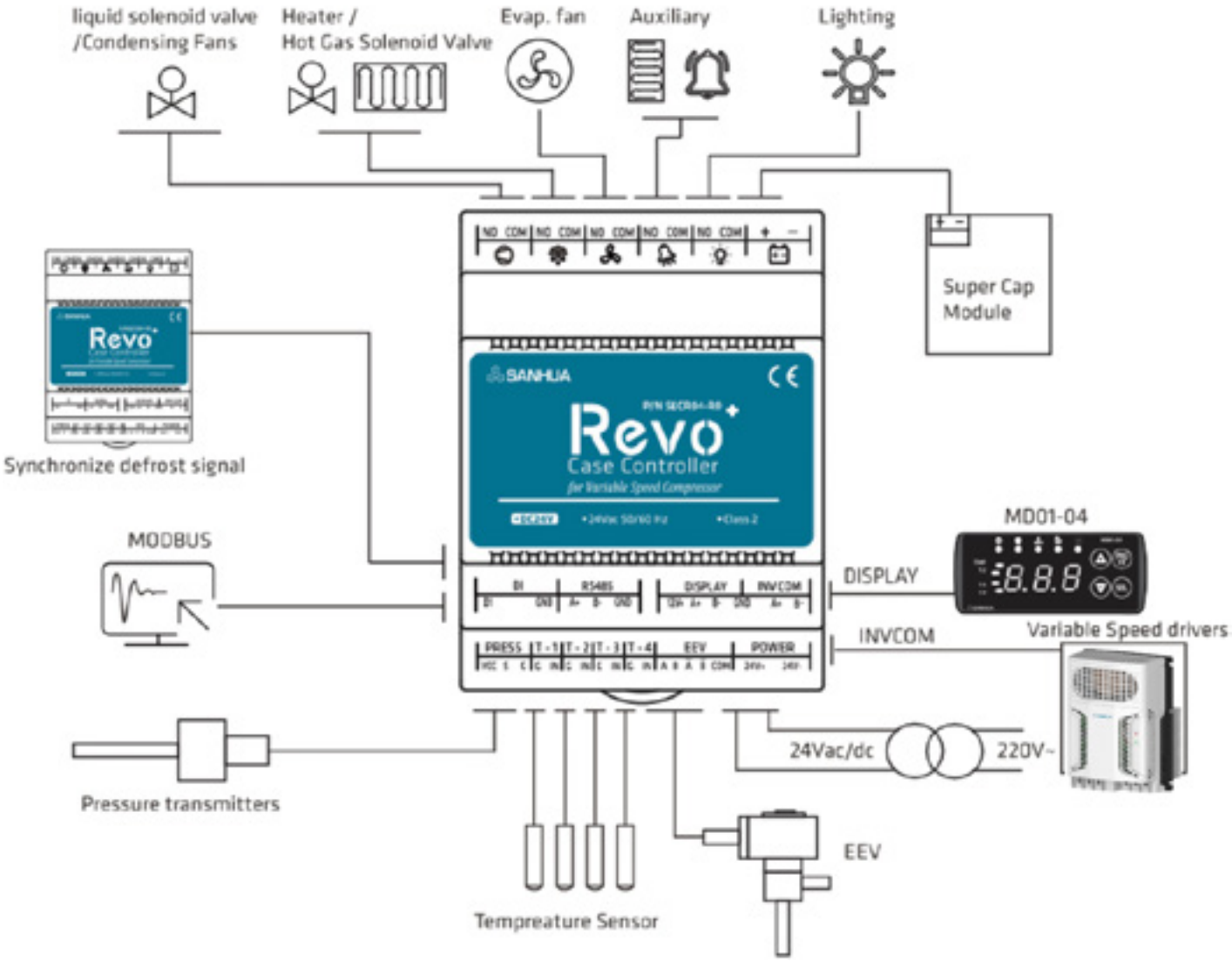


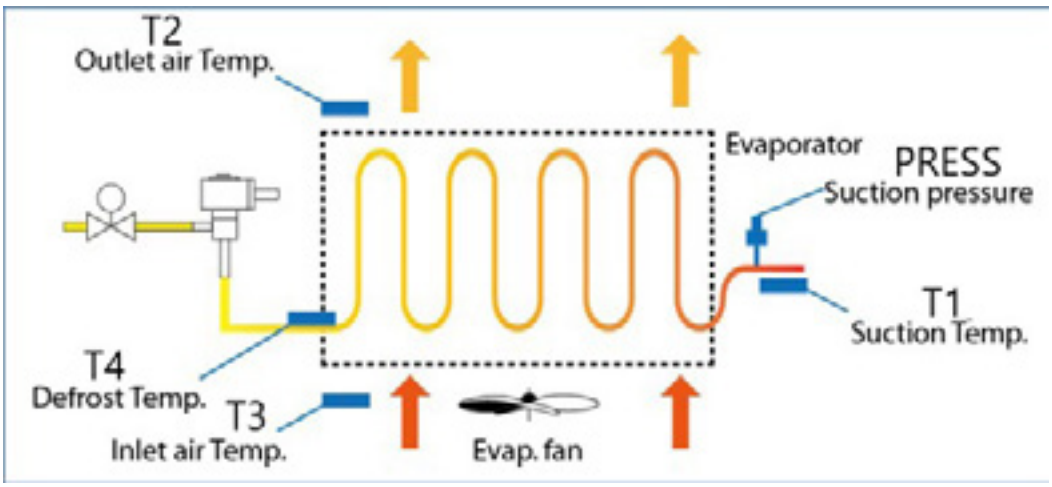

# REFRIGERATED CABINET CONTROLLER

## DIMENSIONS

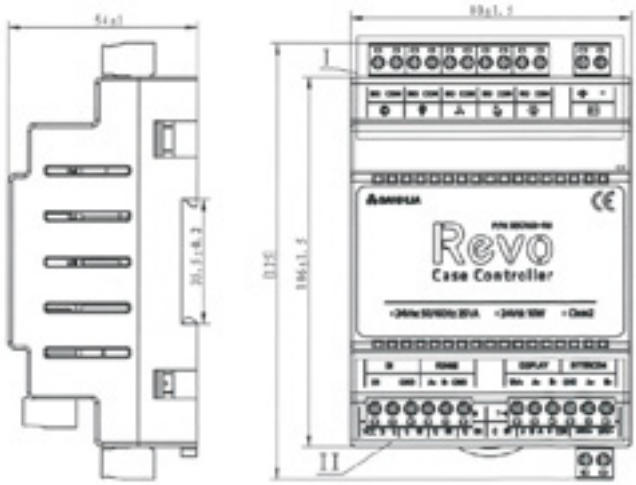


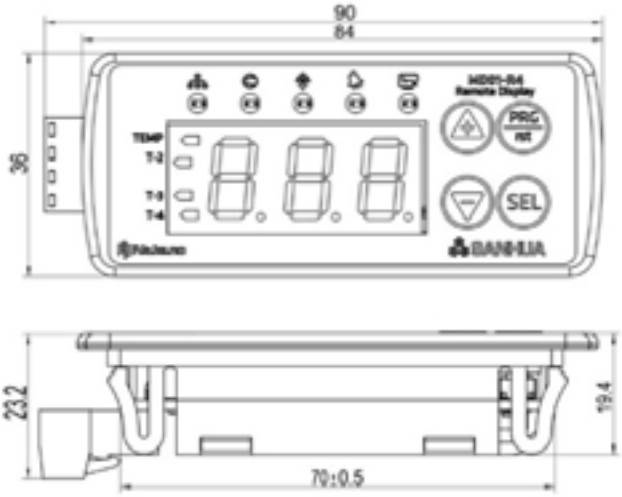


## ACCESSORIES

### Transformer

| Item | Description | | |
|---|---|---|---|
| Transformer | Supply Voltage | 100 ~ 240 VAC | 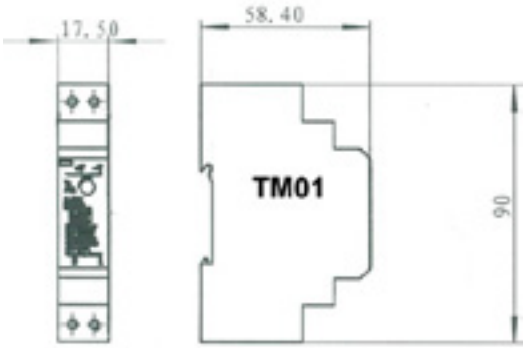  |
| | Output Voltage | From 21.6 to 29 V, Set at 24 VDC | |
| | Output current | 0.63 A | |
| | Operating Temperature | -30 ~ +70°C | |
| | Mounting | DIN 35 mm | |

| Model | Part number | Output current |
|---|---|---|
| TM01 | 20680008002 | 0.63 A |

# REFRIGERATED CABINET CONTROLLER

## ULTRACAPACITOR

| Item | Description |
|---|---|
| Model | SP02 |
| Dimension | 72 (W) mm<br>x 110 (H) mm<br>x 31.7 (D) mm |
| Voltage input | 24 Vac, +10%/-15%,<br>50/60 HZ<br>24 Vdc, +10%/-15% |
| Voltage output | 22.5~23.5 V at Charging<br>(24 Vdc input),<br>14~16 V at discharging |
| Discharging time | ≥25 s<br>(Load current 400 mA) |
| Rated power | Max 8 W (24 Vdc)<br>or 26 VA (24 Vac) |
| Operation | -30~+55°C, ≤95% RH<br>(Non- condensing) |
| Storage | 30~+55°C, ≤95% RH<br>(Non-condensing) |

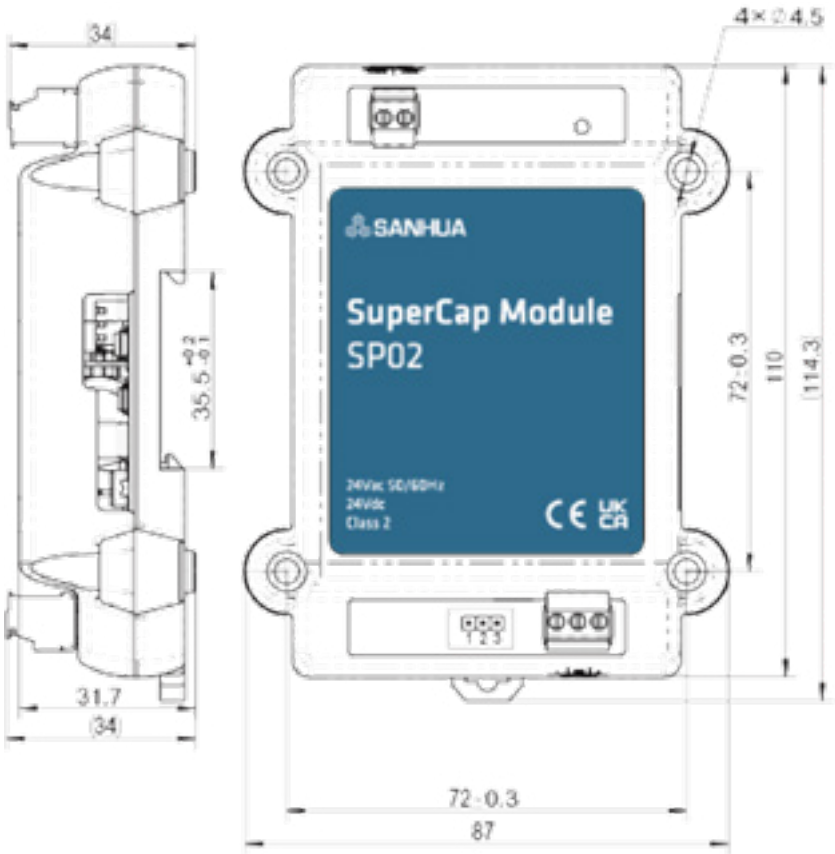


| Model | Part number |
|---|---|
| SP02 | 10680004702 |

***SECR05*** *SERIES (REVO Pulse)*

# REFRIGERATED CABINET CONTROLLER SECR05 (REVO PULSE)

## FEATURES

- COMPLETE CABINET CONTROLLER WITH INTEGRATED CONTROL ON PULSE EXPANSION VALVE, CABINET TEMPERATURE, DEFROST, EVAPORATING FAN AND ADDITIONNAL FUNCTIONS
- INTERCOM FOR MULTIPLE CONTROLLERS SHARED SIGNAL
- DUAL TEMPERATURE MODE FOR MULTIPLE OPERATING CONDITIONS
- ENERGY EFFICIENT, ACHIEVING THE MOST EFFICIENT USE OF THE EVAPORATOR

### GENERAL SPECIFICATIONS

- Applicable for various refrigerants including propane and $CO_2$.
- Operating temperature: -30°C ~ 55°C
- Storage temperature: -30°C ~ 55°C
- Relative humidity: ≤95% RH
- Certification: CE Declaration according to EMC & LVD
- Installation method: DIN35 rail
- Compatible with Sanhua PEV and PEV-S expansion valves

### ELECTRICAL PARAMETERS

- Power supply: 85 Vac~265 Vac, 50/60 Hz
- Power consumption ≤ 25 VA
- Connection: Pluggable terminal (M3) Torque 0.5 N.m, current ≤ 3 A ( 220 V)

  Min / Max wire diameter 0.34 ~ 2.5 $mm^2$

  Pluggable terminal 5.08 (thread M3)

  Min/max wire diameter 1.0~2.5 $mm^2$, Torque 0.5 N.m, current≤10 A.

  XHP terminal (EEV and sensors)
- Communication: RS485, Remote Display, InterCom

# REFRIGERATED CABINET CONTROLLER

## MODEL DESIGNATION LEGEND

| NO. 1 2 3 | | Model Designation Legend |
|---|---|---|
| **SEC**R05-P1 | → | SANHUA Electronic Controller |
| SEC**R05**-P1 | → | Revo Pulse series refrigerated cabinet controller |
| SECR05-**P1** | → | P1 is the controller version |

## ORDERING METHOD

All the models are compatible with the main refrigerants on the market:
R404A, R410A, R134a, R407C, R507, R1234ze, R1234yf, R290, R450A, R513A, R448A, R449A, R452A, R744($CO_2$), R744a($N_2O$), R32, R245fa, R23, R407A, R407F, R124, R717, R407H, R454C, R455A, R454B, R452B, R600A, R600, R454A.

| Model | Part Number | Details |
|---|---|---|
| SECR05-P1 | 10680003802 | Cabinet controller |
| MD05-01 | 10680003602 | Remote display |
| YCQB02H01 (HC) | 10185001502 | 0-20 bar, 0.5-3.5 V, 1/4" soldering, 2 m cable (XHP) |
| YCQB02H18 (HC) | 10185015402 | 0-20 bar, 0.5-3.5 V, 1/4" soldering, 4.9 m cable (XHP) |
| YCQB02L12 (HFC) | 10185015502 | 0-20 bar, 0.5-3.5 V, Thread: SAE-1/4" 7/16-20 UNF-2B, 2 m cable (XHP) |
| YCQB02L28 (HFC) | 10185015602 | 0-20 bar, 0.5-3.5 V, Thread: SAE-1/4" 7/16-20 UNF-2B, 4.9 m cable (XHP) |
| YCQB09L02 ($CO_2$) | 10185044102 | 0-90 bar, 0.5-3.5 V, G 1/4, 2 m cable (XHP) |
| YCQB06L01 ($CO_2$) | 10185067202 | 0-60 bar, 0.5-3.5 V, Flare 7/16-20 UNF-2B (Packard) - XHP/Packard cable needed |
| YCQB02-013251 | 20185108201 | 2 m cable length XHP/Packard for YCQB & YCQC pressure sensors |
| YCQB02-013252 | 20185108101 | 5 m cable length XHP/Packard for YCQB & YCQC pressure sensors |
| YCQB02-013253 | 20185108001 | 9 m cable length XHP/Packard for YCQB & YCQC pressure sensors |
| NTC2A1 | 10665000102 | Temperature Sensor (NTC 5 KΩ), 2 m cable (XHP) |
| NTC5A1 | 10665000202 | Temperature Sensor (NTC 5 KΩ), 5 m cable (XHP) |
| NTC9A1 | 10665000402 | Temperature Sensor (NTC 5 KΩ), 9 m cable (XHP) |
| PEV | PEV Data sheet | PEV Pulse Expansion valve |

**Note:** The temperature & pressure sensors should be ordered separately.
Other pressures transmitters are available on the YCQ datasheet.

# REFRIGERATED CABINET CONTROLLER

## SENSOR INFORMATION

| Items | Description | |
|---|---|---|
| Temperature sensor | Sensor type | NTC 5 KΩ |
| | Cable specification | 2 / 5 or 9 m × 0.5 mm² |
| | Protection level | IP 67 |
| | Accuracy | ±0.3°C (at 25°C) |
| | Operating temperature range | -55°C ~ 85°C |
| Pressure Transmitter | Power Supply | YCQB: (5±0.25) VDC |
| | Output signal | YCQB: (0.5 ~ 3.5) VDC |
| | Pressure range accuracy | ±2.0% F.S. (-30°C/+85 °C) |
| | Protection level | IP 67 |
| | Connection | Soldering: 1/4" or<br>Thread: 1/4"SAE 7/16-20UNF |

# REFRIGERATED CABINET CONTROLLER

## INSTALLATION

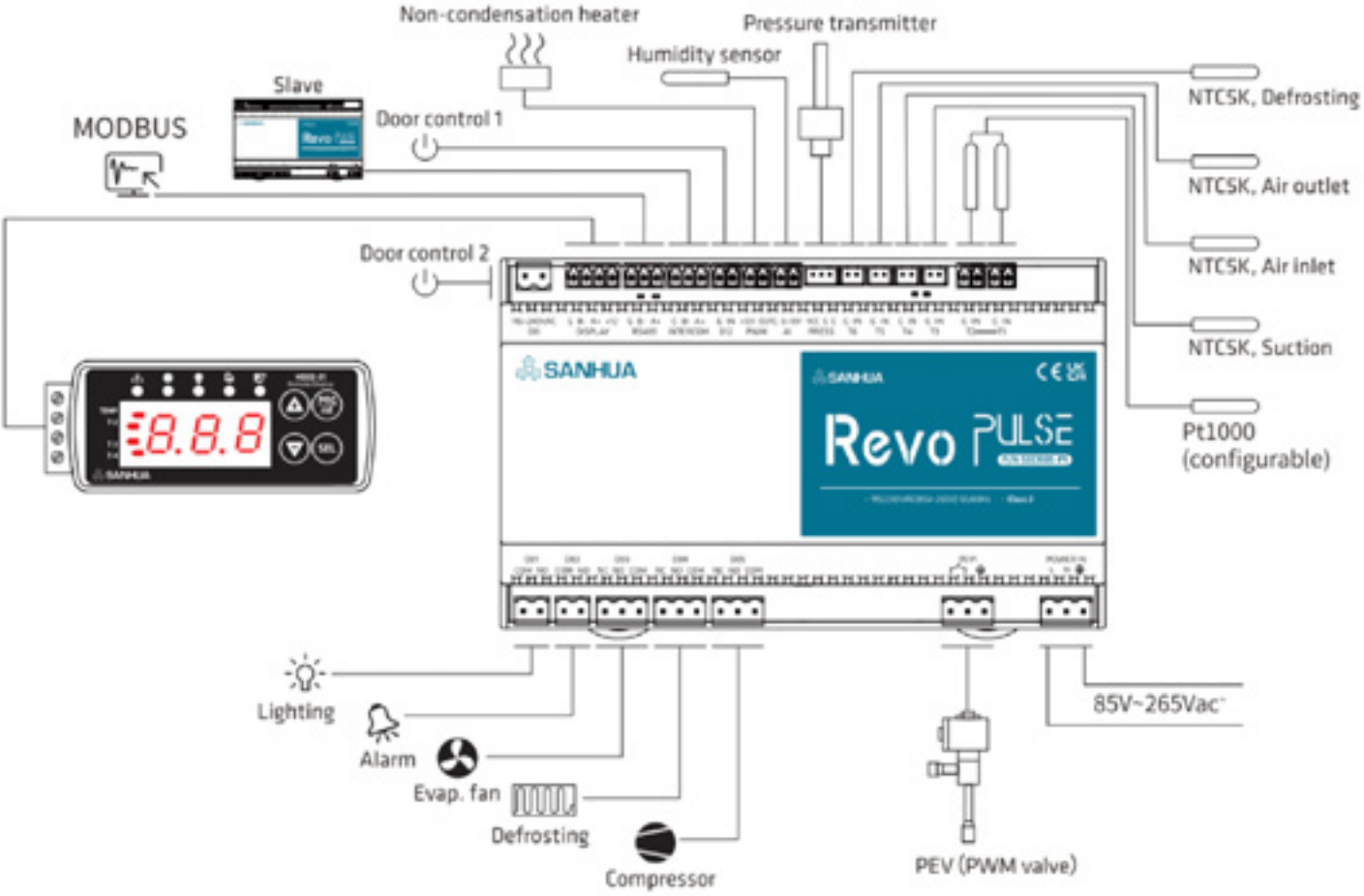


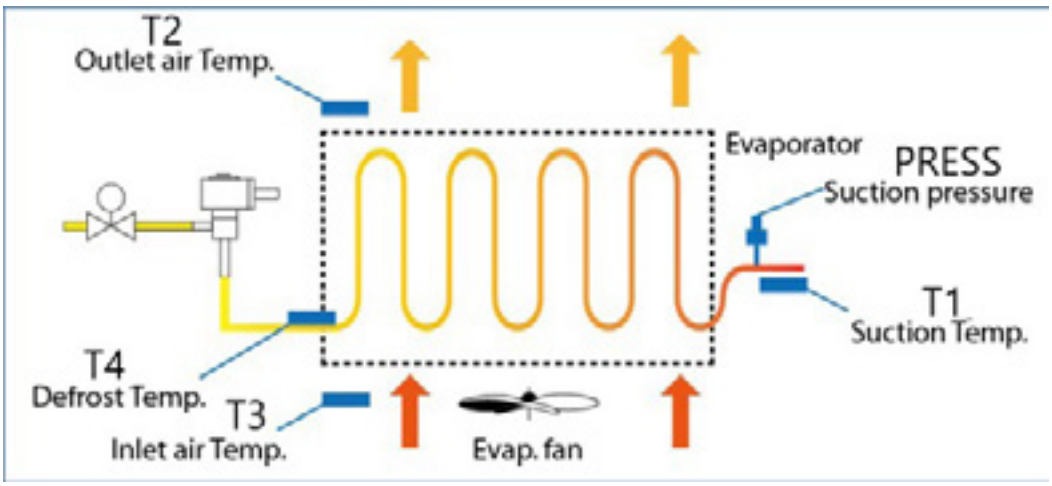

# REFRIGERATED CABINET CONTROLLER

## DIMENSIONS

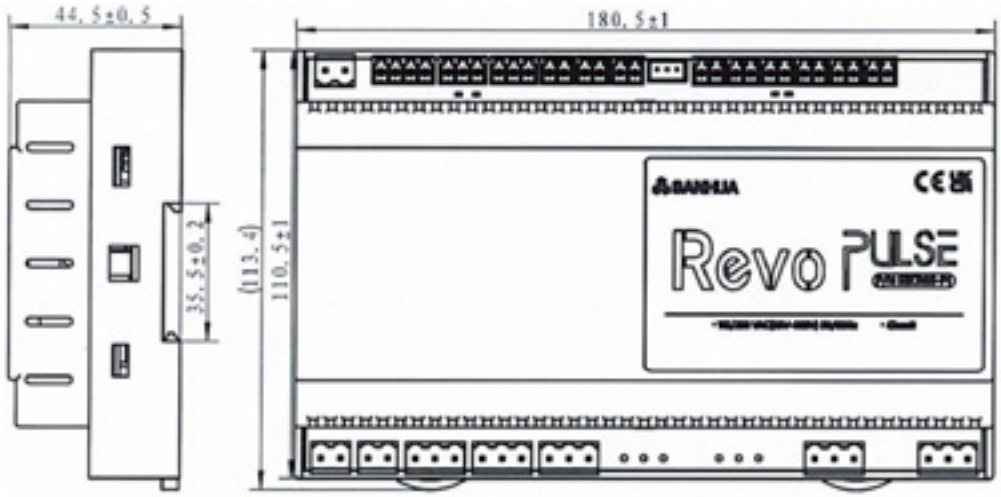


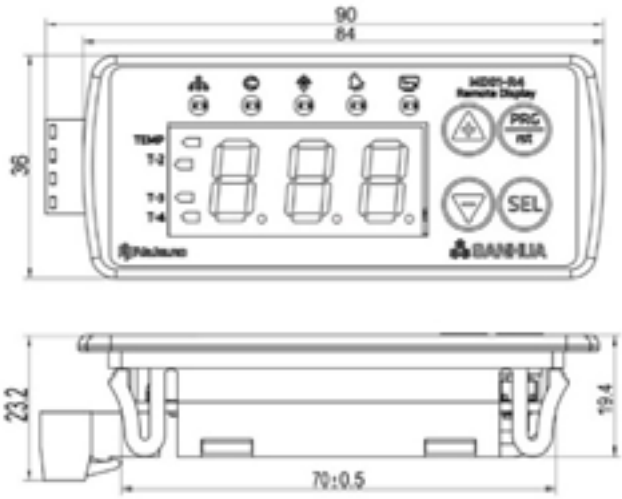

***SECR06*** *SERIES (REVO se)*

# REFRIGERATED CABINET CONTROLLER SECR06 (REVO SE)

## FEATURES

- COMPLETE CABINET CONTROL WITH VERSION TO CONTROL VARIABLE SPEED COMPRESSORS, CABINET TEMPERATURE, DEFROST, EVAPORATING FAN AND LIGHTING
- INTERCOM FOR MULTIPLE CONTROLLERS SHARED SIGNAL
- DUAL TEMPERATURE MODE FOR MULTIPLE OPERATING CONDITIONS
- ENERGY EFFICIENT, ACHIEVING THE MOST EFFICIENT USE OF THE EVAPORATOR

### GENERAL SPECIFICATIONS

- Applicable for various refrigerants applications.
- Operating temperature: -30°C ~ 55°C
- Storage temperature: -30°C ~ 55°C
- Relative humidity: ≤95% RH
- Certification: CE Declaration according to EMC
- Installation method: DIN35 rail or through panel mounting
- Compatible with compressor using TTL or PWM signals.

### ELECTRICAL PARAMETERS

- Power supply: 110-220 Vac +10%/-15%, 50/60 Hz, Class II
- Connection: Pluggable terminal (M3) Torque 0.5 N.m, current ≤ 3 A (220 V)
  Min / Max wire diameter 0.34 ~ 2.5 $mm^2$ XHP terminal (Temperature sensor)
- Communication: RS485, InterCom

### MODEL DESIGNATION LEGEND

| NO. 1 2 3 | | Model Designation Legend |
|---|---|---|
| **SEC**R06-S1 | → | SANHUA Electronic Controller |
| SEC**R06**-S1 | → | Revo se series refrigerated cabinet controller |
| SECR06-**S1** | → | S1 is the controller version |

# REFRIGERATED CABINET CONTROLLER

## PRODUCT FEATURES

| Product family | Items | Revo SE | | |
|---|---|---|---|---|
| Sanhua Model | Basic Information | SECR06-S1 | SECR06-S2 | SECR06-S3 |
| Description | | Thermostat for cooler | Thermostat for freezer | Inverter system |
| Typical Application | | Remote/Plug-in | Remote/Plug-in | Remote/Semi Plug-in |
| Power Supply | | 110~220 Vac | 110~220 Vac | 110~220 Vac |
| Cooling | Output Signal | ✓ | ✓ | ✓ |
| EEV | | ✗ | ✗ | ✗ |
| Evaporative fan | | ✗ | ✓ | ✓ |
| Defrosting | | ✗ | ✓ | ✓ |
| Real Time Clock | | ✗ | ✓ | ✓ |
| Non-condensing/Alarm | | ✗ | ✗ | ✗ |
| Lighting | | ✗ | ✓ | ✓ |
| Digital Input (DI) | Input Signal | ✗ | ✓ | ✓ |
| Outlet Air Temp. | | ✓ | ✓ | ✓ |
| Auxiliary Air Temp. | | ✗ | ✓ | ✓ |
| Suction Temp. | | ✗ | ✗ | ✗ |
| Defrosting Temp. | | ✗ | ✓ | ✓ |
| TTL/PWM | Communication | ✗ | ✗ | ✓ |
| Modbus | | ✗ | ✓ | ✓ |

## ORDERING METHOD

All the models are compatible with the main refrigerants on the market:
R404A, R410A, R134a, R407C, R507, R1234ze, R1234yf, R290, R450A, R513A, R448A, R449A, R452A, R744($CO_2$), R744a($N_2O$), R32, R245fa, R23, R407A, R407F, R124, R717, R407H, R454C, R455A, R454B, R452B, R600A, R600, R454A

| Model | Part Number | Details |
|---|---|---|
| SECR06-S1 | SECX0000102 | REVO se Cabinet controller for Medium temperature applications |
| SECR06-S2 | SECX0000202 | REVO se Cabinet controller for Low temperature applications |
| SECR06-S3 | SECX0000302 | REVO se Cabinet controller with variable speed compressor control |
| NTC2A1 | 10665000102 | Temperature Sensor (NTC 5 KΩ), 2 m cable (XHP) |
| NTC5A1 | 10665000202 | Temperature Sensor (NTC 5 KΩ), 5 m cable (XHP) |
| NTC9A1 | 10665000402 | Temperature Sensor (NTC 5 KΩ), 9 m cable (XHP) |

**Note:** The temperature sensors should be ordered separately.

# REFRIGERATED CABINET CONTROLLER

## SENSOR INFORMATION

| Items | Description | |
|---|---|---|
| Temperature sensor | Sensor type | NTC 5 KΩ |
| | Cable specification | 2 m (5 KΩ) / 5 m (5 KΩ) or 9 m (5 KΩ) × 0.5 mm² |
| | Protection level | IP 67 |
| | Accuracy | ±0.3°C (at 25°C) |
| | Operating temperature range | -55°C ~ 85°C |

## INSTALLATION

P/N | **SECR06-S1**

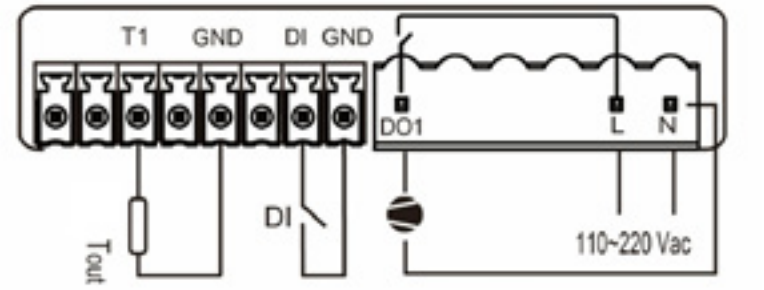


P/N | **SECR06-S2**

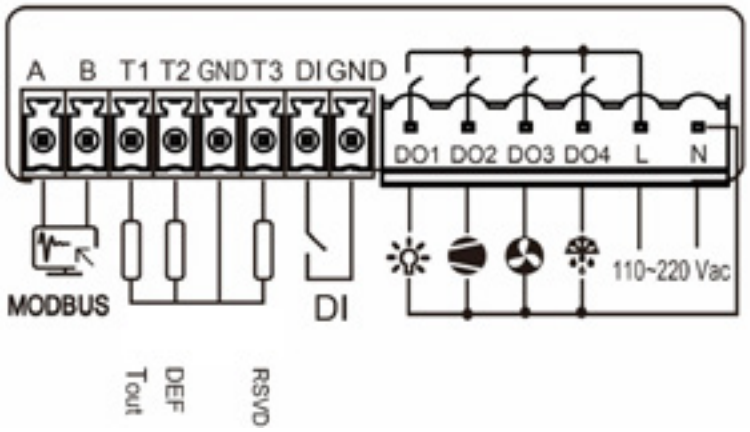


P/N | **SECR06-S3**

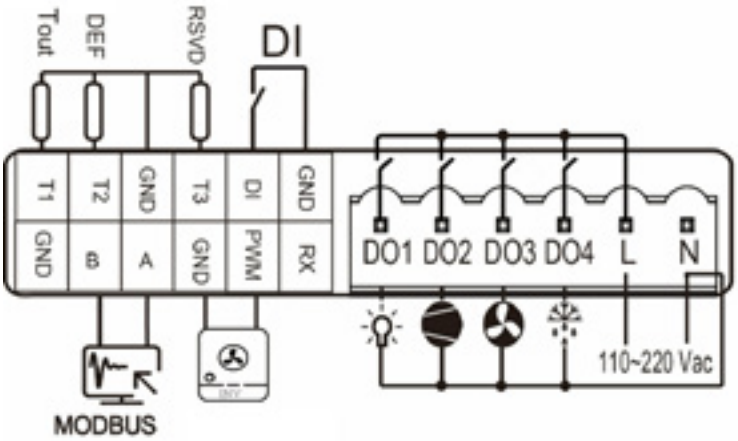

# REFRIGERATED CABINET CONTROLLER

## DIMENSIONS

### REVO S1 & S2

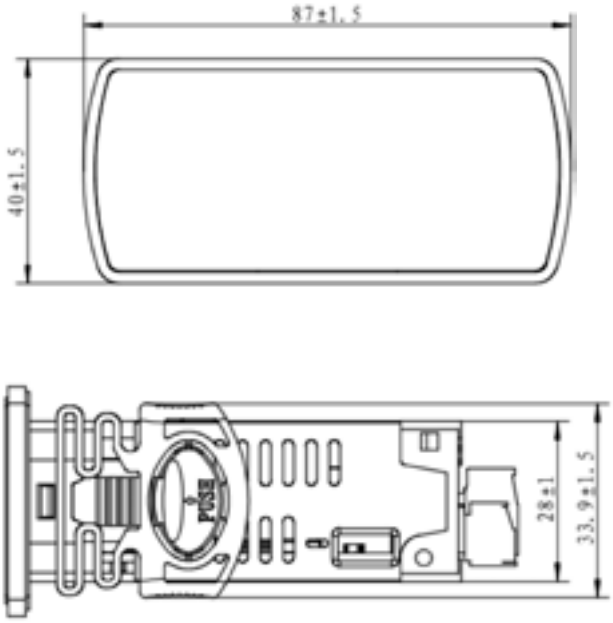


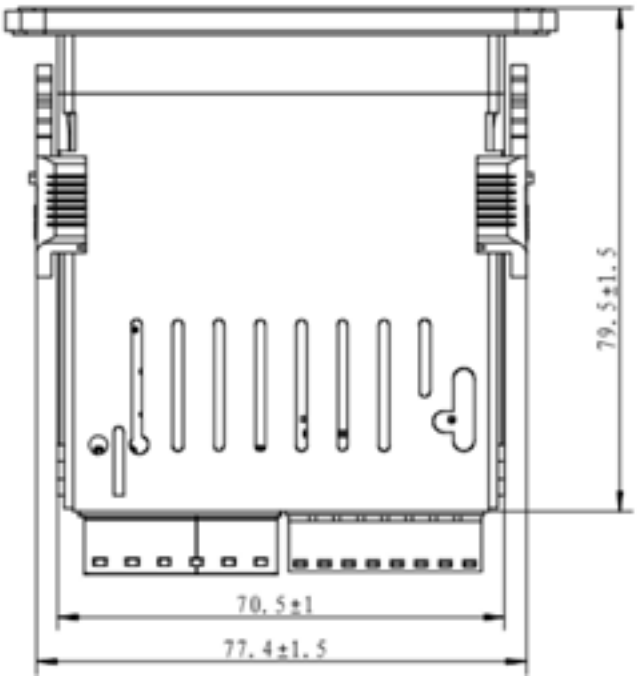


### REVO S3

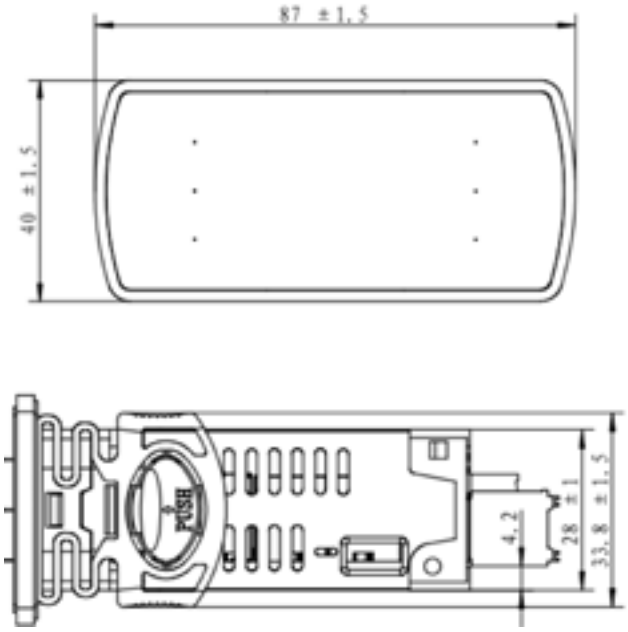


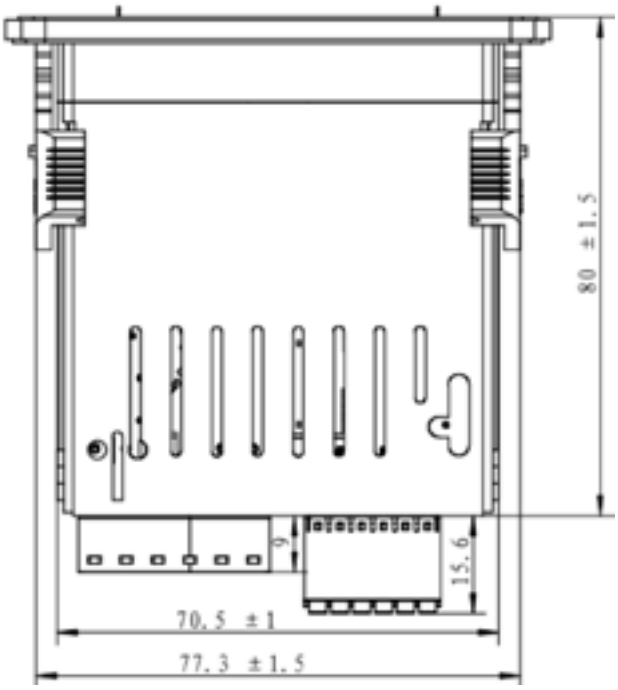

***SECD04*** *SERIES*

# DUAL ELECTRONIC EXPANSION VALVE CONTROLLER

## FEATURES

- DUAL EEV CONTROL
- ADVANCED PID ALGORITHM TO ENSURE ACCURATE AUTOMATIC ADJUSTMENT OF SUPERHEAT
- QUICK-SAFE PREVENTION OF LOW AND HIGH SUPERHEAT TO ENSURE THE SYSTEM OPERATING WELL AT ANY CONDITIONS
- SMALL SIZE, RAIL MOUNTING DESIGN, EASY TO INSTALL
- ENERGY EFFICIENT, ACHIEVING THE MOST EFFICIENT USE OF THE EVAPORATOR
- FAIL SAFE FUNCTION TO ENSURE CONTINUOUS OPERATION
- VALVE CONTROL VIA MODBUS
- ELECTRICAL BALL VALVE (EBV) CONTROL

### GENERAL SPECIFICATIONS

- Applicable for various refrigerants applications
- Operating temperature: -30°C ~ 55°C
- Storage temperature: -30°C ~ 55°C
- Relative humidity: ≤95% RH
- Certification: CE Declaration according to EMC
- Installation method:
  DIN rail snap-in or wall mounting with screws
- Compatible with Sanhua LPF-T, DPF and EBV valves

### ELECTRICAL PARAMETERS

- Power supply: 24Vac/24Vdc +10%/-15%, 50/60Hz
- Requested transformer:
  Sanhua TM02 [≥ 30VA (24Vac) or ≥ 20W (24Vdc)]
- Inputs: 1x Pressure sensor input for 2 circuits
  2x Temperature sensor input
  1x upper level Communication input (RS485 & Modbus)
  1x Cascading communication input (RS485 & Modbus)
  2x Run/Stop Signal
- Output: 2x EEV output (12Vdc±10%), rectangular wave

# DUAL ELECTRONIC EXPANSION VALVE CONTROLLER

## MODEL DESIGNATION LEGEND

| NO. 1 2 3 4 | | Model Designation Legend |
|---|---|---|
| **SEC**D04-R1 | → | **S**ANHUA electronic **E**xpansion valve **C**ontroller |
| SEC**D**04-R1 | → | **D**ual EEV Controller |
| SECD**04**-R1 | → | The **4th Generation** of eDual family |
| SECD04-**R1** | → | Different Combination of functions like **pressure signal, button and display** |

## ORDERING METHOD

All the models are compatible with the main refrigerants on the market:
R22, R404A, R410A, R134a, R407C, R507, R1234ze, R1234yf, R290, R450A, R513A, R448A, R449A, R452A, R744(CO2), R744A(N20), R32, R245fa, R23, R407A, R407F, R124, R717, R407H, R454C, R455A, R454B, R452B, R600A, R600, R1270, R1233zdE, R1234zeZ, R452C, R454A, R457A.

All the models get a RS485 port for communication.

| Model | Model | Part Number | Details |
|---|---|---|---|
| Controller | SECD04-R1 | SECD0000302 | **Voltage** pressure sensor + Display + button **(°C/Bar & °F/Psi)** |
| | SECD04-R2 | SECD0000202 | **Current** pressure sensor + Display + button **(°C/Bar & °F/Psi)** |
| | SECD04-01 | SECD0000402 | **Voltage** pressure sensor - No Display - No button **(°C/Bar & °F/Psi)** |
| | SECD04-02 | SECD0000502 | **Current** pressure sensor - No Display - No button **(°C/Bar & °F/Psi)** |
| Temp. Sensor | NTC2A1 | 10665000102 | **2m** Temp. Sensor (5kΩ) |
| | NTC5A1 | 10665000202 | **5m** Temp. Sensor (5kΩ) |
| | NTC9A1 | 10665000402 | **9m** Temp. Sensor (5kΩ) |
| Pressure Sensor* | YCQB02H01-1 | 10185001502 | **0/20 bar (0,5-3,5V)** with **Solder** connection, **2m** cable length |
| | YCQB02H18-1 | 10185015402 | **0/20 bar (0,5-3,5V)** with **Solder** connection, **4.9m** cable length |
| | YCQB02L12-1 | 10185015502 | **0/20 bar (0,5-3,5V)** with **Flare** connection, **2m** cable length |
| | YCQB02L28-1 | 10185015602 | **0/20 bar (0,5-3,5V)** with **Flare** connection, **4.9m** cable length |
| | YCQB03H06 | 10185046502 | **0/30 bar (0,5-4,5V)** with **Solder** connection, **2m** cable length |
| | YCQB04H50 | 10185004602 | **0/34,5 bar (0,5-4,5V)** with **Solder** connection, **Packard** socket |
| | YCQB02L01 | 10185004902 | **0/20 bar (0,5-4,5V)** with **Flare** connection, **2m** cable length |
| | YCQB03L157 | 10185046202 | **0/30 bar (0,5-4,5V)** with **Flare** connection, **Packard** socket |
| | YCQC02L18 | 10185017102 | **-1/12 bar (4-20mA)** with **Flare** connection, **Packard** socket |
| | YCQC09L02 | 10185042402 | **0/90 bar (4-20mA)** with **Flare** connection, **Packard** socket |
| Packard cable | YCQB02-013251 | 20185108201 | **2m** cable length for YCQB & YCQC pressure sensors |
| | YCQB02-013252 | 20185108101 | **5m** cable length for YCQB & YCQC pressure sensors |
| | YCQB02-013253 | 20185108001 | **9m** cable length for YCQB & YCQC pressure sensors |

**Note:** The temperature & pressure sensors should be ordered separately.
*Other YCQ models are available, please check the SANHUA YCQ Datasheet or ask your local support

# DUAL ELECTRONIC EXPANSION VALVE CONTROLLER

## TEMPERATURE AND PRESSURE SENSORS

| Items | Description | |
|---|---|---|
| Temperature sensor | Type | NTC 5 KΩ |
| | Wire | 2 × 0.5 mm² |
| | Protection class | IP 67 |
| | Accuracy | ±0.3°C (below 25°C) |
| | Temperature Range | -50 ~ 50°C |
| | Electrical connector | XHP connector |
| Pressure transmitter | Voltage supply | YCQB: 5±0.25 Vdc<br>YCQC: 10-30 Vdc |
| | Output | YCQB: 0.5~3.5 Vdc or 0.5~4.5 Vdc<br>YCQC: 4-20mA |
| | Accuracy | ±0.8% F.S.(-40 ~ 40°C) |
| | Protection class | IP 67 |
| | Connection Type | Solder 1/4"<br>Flare = Thread SAE - 1/4"7/16-20UNF-2B |
| | Electrical connector | XHP connector<br>Packard connector |

## DIMENSIONS AND INSTALLATION

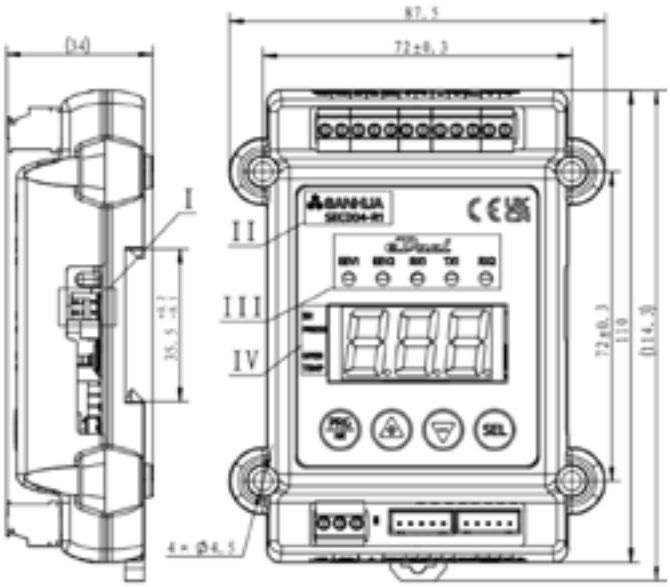


Version with display and buttons

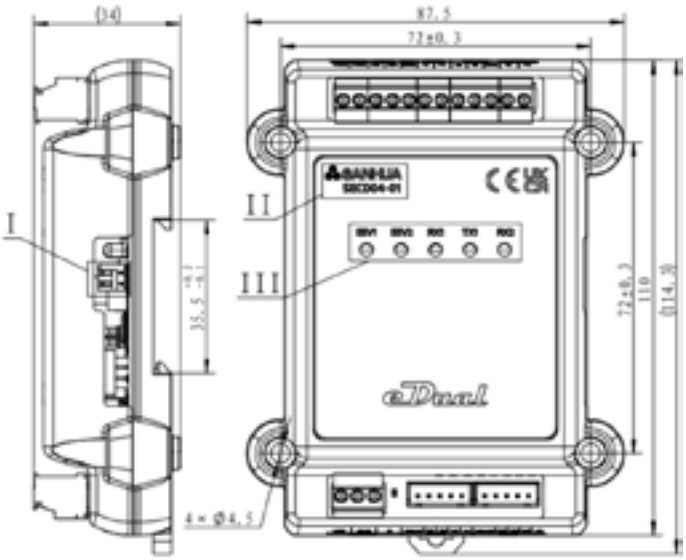


Version without display nor buttons

# DUAL ELECTRONIC EXPANSION VALVE CONTROLLER

## INSTALLATION DIAGRAM

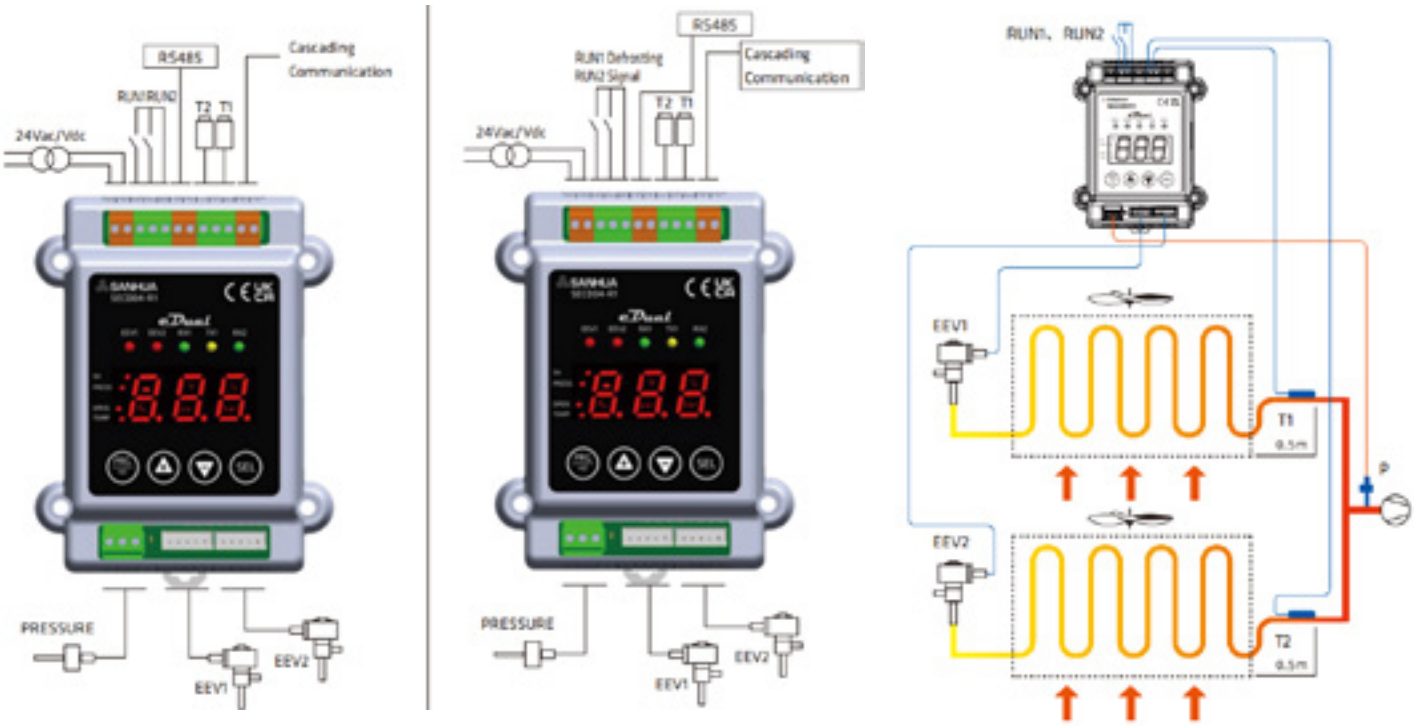


**Option 1:** The 2x Run signal can be configured as 2x independent RUN/STOP signal.

**Option 2:** 1x Run as shared RUN/STOP signal and the other as shared defrosting signal (to keep the EEV at defined position during defrosting).

Users can group up to 32 controllers (1x Master + 31x Slave) by cascading commnication port and this will enable all the Slaves to share the RUN, pressure and defrosting signal from Master controller.

The Pressure sharing is automatic in cascading commnication mode while specific parameter setting is needed for RUN signal {[40020]=1} and defrosting signal {[40019]=1} sharing.

If Parameter [40004] = 1, the Slaves are enabled to share the 1# temperaure signal from Master. Please notice that this require all the evaportors have idential performances all the time.

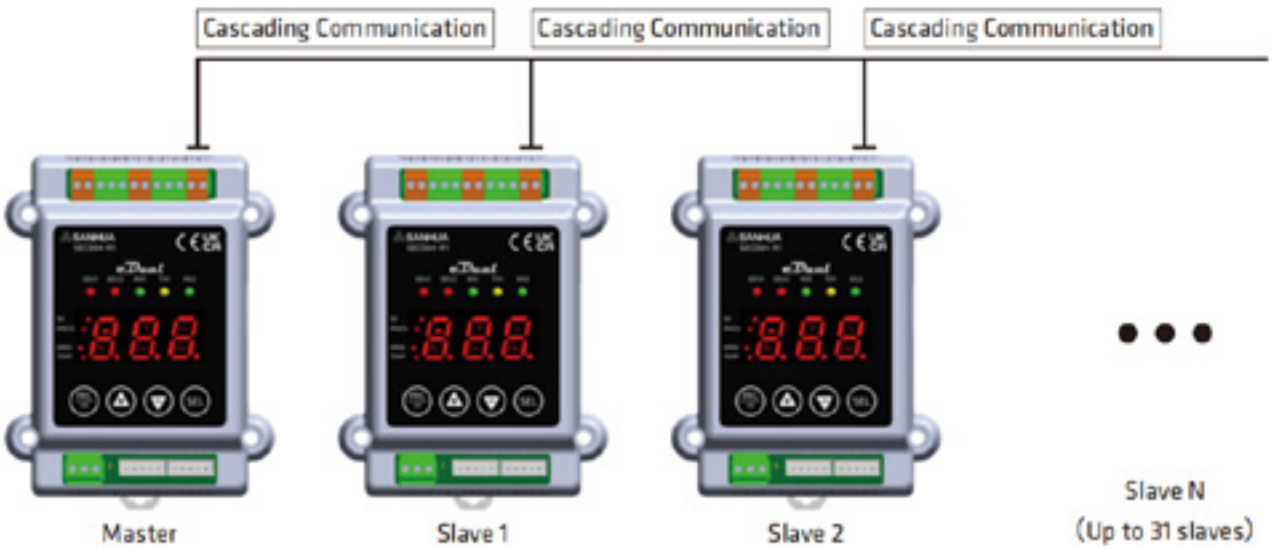

# DUAL ELECTRONIC EXPANSION VALVE CONTROLLER

## ACCESSORIES

### Power supply

| Item | Description |
|---|---|
| Model | TM02 |
| Dimension | 35(W)mm x 90 (H)mm x 58.3 (D)mm |
| Voltage input | 85 ~ 264VAC, 47 ~ 63Hz |
| Current AC | 0.5A/115VAC, 0.25A/230VAC |
| Rated voltage output | 24Vdc, ±1.0% |
| Rated current output | 1.5A |
| Rated power | 36W |
| Operation | -30~+70°C, 20~90%RH (Non-condensing) |
| Storage | -40~+85°C, 10~95%RH (Non-condensing) |
| Wire | 18~24AWG9 (0.2~0.8mm²) |

| Model | Part number | Output current | Code reported on the product label |
|---|---|---|---|
| TM02 | 20680008102 | 1.5 A | HDR 30 |

***SEC61*** *SERIES*

# ELECTRONIC EXPANSION VALVE CONTROLLER

Electronic Expansion Valve Controller SEC61 series is the controller with enhanced features for the refrigeration applications, A/C and HP applications.

## FEATURES

- ADVANCED PID ALGORITHM TO ENSURE ACCURATE AUTOMATIC ADJUSTMENT OF SUPERHEAT;
- QUICK-SAFE PREVENTION OF LOW AND HIGH SUPERHEAT TO ENSURE THE SYSTEM OPERATING WELL AT ANY CONDITIONS;
- SMALL SIZE, RAIL MOUNTING DESIGN, EASY TO INSTALL;
- ENERGY EFFICIENT, ACHIEVING THE MOST EFFICIENT USE OF THE EVAPORATOR;
- FAIL SAFE FUNCTION TO ENSURE CONTINUOUS OPERATION;
- VALVE CONTROL VIA MODBUS;
- ELECTRICAL BALL VALVE (EBV) CONTROL.

### GENERAL SPECIFICATIONS

- Applicable for various refrigerants
- Operating temperature: -30~55°C
- Storage temperature: -30~55°C
- Relative humidity: ≤95%RH
- Certification: UL, CE Declaration according to EMC
- Installation method: DIN railsnap-in or wall mounting with screws
- Compatible with Sanhua DPF and LPF valves

### ELECTRICAL PARAMETERS

- Power supply:
  24Vac/24Vdc +10%/-15%, 50/60Hz
- Requested transformer: ≥ 15VA
- Inputs: 1 Pressure sensor input
  1 Temperature sensor input
  1 Communication input (RS485 Modbus)
- Output: 1 Auxiliary relay output (30Vdc/3A)
  1 EEV output (12V DC±10%), rectangular wave

# ELECTRONIC EXPANSION VALVE CONTROLLER

## MODEL DESIGNATION LEGEND

| NO. | | | | Model Designation Legend |
|---|---|---|---|---|
| 1 | 2 | 3 | 4 | |
| **SEC** | 6 | 11 | R6 | SANHUA electronic Expansion valve Controller |
| SEC | **6** | 11 | R6 | Digital means the sixth-generation product |
| SEC | 6 | **11** | R6 | Odd means voltage P-sensor, even means current type |
| SEC | 6 | 11 | **R6** | R6 means with RS485 modbus communication |

## ORDERING METHOD

*All the models are compatible with the main refrigerants on the market :*
*R22, R404A, R410A, R134a, R407C, R507, R1234ze, R1234yf, R290, R450A, R513A, R448A, R449A, R452A, R744($CO_2$), R744(N20), R32, R245fa, R23, R407A, R407F, R124, R717, R407H, R454C, R455A, R454B, R452B, R600A, R600, R1270, R1233zdE, R1234zeZ, R452C, R454A, R457A.*
*All the models get a RS485 port for communication.*

| Item | Model | Part Number | Details | | |
|---|---|---|---|---|---|
| | | | Item | | Qty |
| Controller | SEC611-R6 | 10680005102 | **Voltage** pressure sensor | **°C/Bar & °F/Psi** | **1** |
| | SEC612-R6 | 10680005002 | **Current** pressure sensor | **°C/Bar & °F/Psi** | **1** |
| Temp. Sensor | NTC2A1 | 10665000102 | **2m** Temp. Sensor (5kΩ) | | |
| | NTC5A1 | 10665000202 | **5m** Temp. Sensor (5kΩ) | | |
| | NTC9A1 | 10665000402 | **9m** Temp. Sensor (5kΩ) | | |
| | NTCX | - | **2m** Temp. Sensor (10kΩ) | | |
| Pressure Sensor* | YCQB02H01-1 | 10185001502 | **0/20 bar – Ratiometric (0,5-3,5V)** with **Solder** connection, **2m** cable length | | |
| | YCQB02H18-1 | 10185015402 | **0/20 bar - Ratiometric (0,5-3,5V)** with **Solder** connection, **4.9m** cable length | | |
| | YCQB02L12-1 | 10185015502 | **0/20 bar - Ratiometric (0,5-3,5V)** with **Flare** connection, **2m** cable length | | |
| | YCQB02L28-1 | 10185015602 | **0/20 bar - Ratiometric (0,5-3,5V)** with **Flare** connection, **4.9m** cable length | | |
| | YCQB03H06 | 10185046502 | **0/30 bar – Ratiometric (0,5-4,5V)** with **Solder** connection, **2m** cable length | | |
| | YCQB04H50 | 10185004602 | **0/34,5 bar – Ratiometric (0,5-4,5V)** with **Solder** connection, **Packard** connection | | |
| | YCQB02L01 | 10185004902 | **0/20 bar - Ratiometric (0,5-4,5V)** with **Flare** connection, **2m** cable length | | |
| | YCQB03L157 | 10185046202 | **0/30 bar - Ratiometric (0,5-4,5V)** with **Flare** connection, **Packard** connection | | |
| | YCQC02L18 | 10185017102 | **-1/12 bar - Current** with **Flare** connection, **Packard** connection | | |
| | YCQC09L02 | 10185042402 | **0/90 bar – Current** with **Flare** connection, **Packard** connection | | |
| Packard cable | YCQB02-013251 | 20185108201 | **2m** cable length for YCQB & YCQC pressure sensors | | |
| | YCQB02-013252 | 20185108101 | **5m** cable length for YCQB & YCQC pressure sensors | | |
| | YCQB02-013253 | 20185108001 | **9m** cable length for YCQB & YCQC pressure sensors | | |

**Note:** The temperature & pressure sensors should be ordered separately.

*Others YCQ models are available, please check the SANHUA YCQ Datasheet or ask your local support

# ELECTRONIC EXPANSION VALVE CONTROLLER

## TEMPERATURE AND PRESSURE SENSORS

| Item | Description | |
|---|---|---|
| Temperature Sensor | Type | NTC 5KΩ |
| | Wire | 2×0.5mm² |
| | Protection class | IP 67 |
| | Accuracy | ±0.3ºC (below25ºC) |
| | Temperature Range | -50 ~50ºC |
| | Electrical connector | XHP connector |
| Pressure sensor | Voltage supply | YCQB: 5±0.25 Vdc<br>YCQC: 10-30 Vdc |
| | Output | YCQB: 0.5~3.5 Vdc or 0.5~4.5 Vdc<br>YCQC: 4-20mA |
| | Accuracy | ±0.8% F.S.(-40~40ºC) |
| | Protection class | IP 67 |
| | Connection Type | Solder 1/4”<br>Flare = Thread SAE - 1/4"7/16-20UNF-2B |
| | Electrical connector | XHP connector<br>Packard connector |

# ELECTRONIC EXPANSION VALVE CONTROLLER

## DIMENSIONS AND INSTALLATION

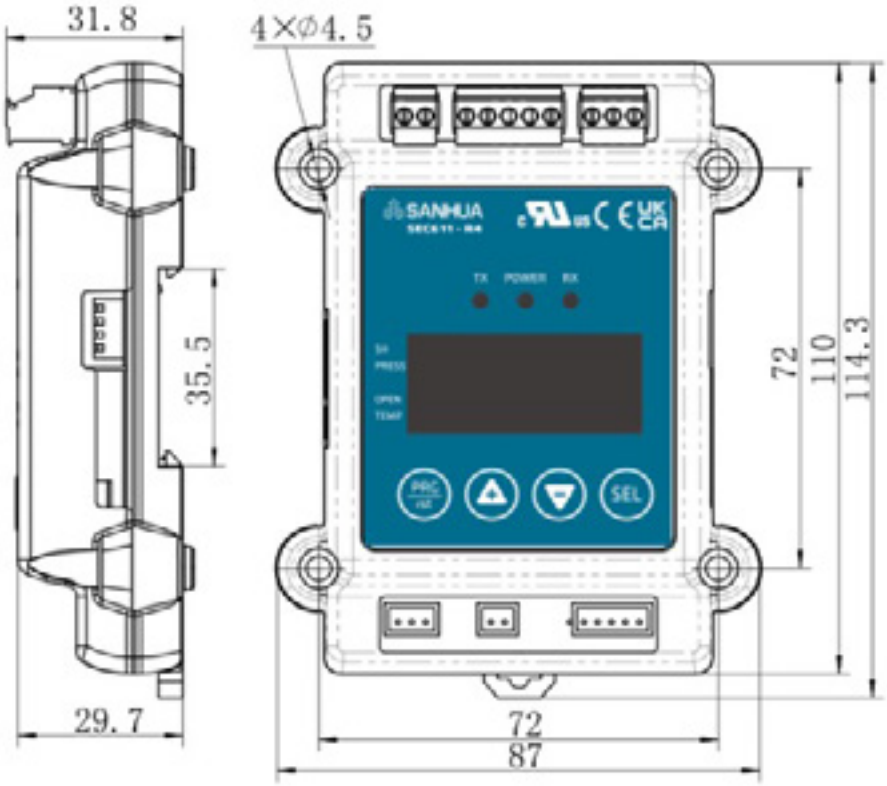


## INSTALLATION DIAGRAM

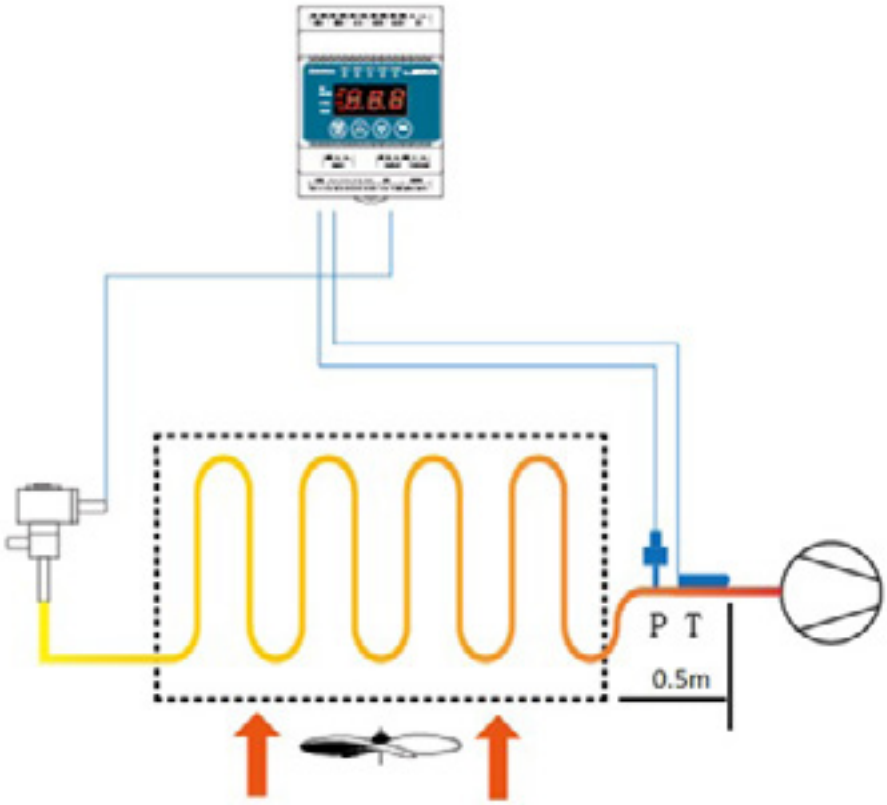

# ELECTRONIC EXPANSION VALVE CONTROLLER

## ACCESSORIES

*Power supply*

| Items | Description |
|---|---|
| Model | TM01 |
| Dimension | 17.5(W)mm x 90 (H)mm x 58.3 (D)mm |
| Voltage input | 85 ~ 264VAC, 47 ~ 63Hz |
| Current AC | 0.5A/115VAC, 0.25A/230VAC |
| Rated voltage output | 24Vdc, ±1.0% |
| Rated current output | 0.63A |
| Rated power | 15.2W |
| Operation | -30~+70°C, 20~90%RH (Non-condensing) |
| Storage | -40~+85°C, 10~95%RH (Non-condensing) |
| Wire | 18~24AWG9 (0.2~0.8mm²) |

| Items | Description |
|---|---|
| Model | TM02 |
| Dimension | 35(W)mm x 90 (H)mm x 58.3 (D)mm |
| Voltage input | 85 ~ 264VAC, 47 ~ 63Hz |
| Current AC | 0.5A/115VAC, 0.25A/230VAC |
| Rated voltage output | 24Vdc, ±1.0% |
| Rated current output | 1.5A |
| Rated power | 36W |
| Operation | -30~+70°C, 20~90%RH (Non-condensing) |
| Storage | -40~+85°C, 10~95%RH (Non-condensing) |
| Wire | 18~24AWG9 (0.2~0.8mm²) |

| Model | Part Number | Output current | Code reported on the product label |
|---|---|---|---|
| TM01 | 20680008002 | 0.63 A | HDR 15 |
| TM02 | 20680008102 | 1.5 A | HDR 30 |

# ELECTRONIC EXPANSION VALVE CONTROLLER

*Supercapacitor*

| Items | Description |
|---|---|
| Model | SP02 |
| Dimension | 72 (W)mm x 110 (H)mm x 29,7(D)mm |
| Voltage input | 24Vac, +10%/-15%, 50/60HZ<br>24Vdc, +10%/-15% |
| Voltage output | 22.5~23.5V at Charging (24Vdc input),<br>14~16V at discharging |
| Discharging time | ≥25s (Load current 400mA) |
| Rated power | Max 8w (24Vdc) or 26VA (24Vac) |
| Operation | -30~+55°C, ≤95%RH (Non-condensing) |
| Storage | 30~+55°C, ≤95%RH (Non-condensing) |

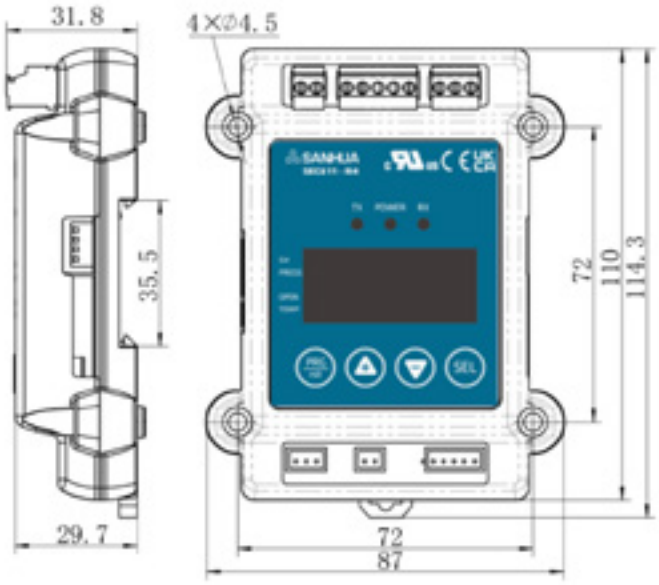


| Model | Part Number |
|---|---|
| SP02 | 10680004702 |

***SEC HD*** *SERIES*

# ELECTRIC EXPANSION VALVE CONTROLLER

**Heavy Duty** controller carries out the same world-class superheat control performance of SEC6x family but with significant improved low temperature resistance and water protection class.

It can be installed inside of the cold storage room.

**SEC631-HD & SEC641-HD for all refrigerant applications including CO2 (R744) and HC/HFO.**

## FEATURES

- HIGH WATER RESISTANCE
- LOW TEMPERATURE RESISTANT PARTS TO BE INSTALLED DOWN TO -35 $^{0}$C ENVIRONMENT
- INTEGRATED TEMPERATURE SENSOR, PRESSURE TRANSMITTER SOCKET AND EEV COIL
- ACCURATE AND EFFICIENT SUPERHEAT CONTROL PERFORMANCE TO IMPROVE THE SYSTEM EFFICIENCY OF REFRIGERATION.

### GENERAL SPECIFICATION

- Operating temperature: -35~55 °C
- Storage temperature:
  -40~60 °C, Humidity:≤95%RH, Non-condensing
- Enclosure: IP67
- 29 commonly used refrigerants are available (see table below)
- Certification: CE

### ELECTRICAL PARAMETERS

- Power supply: 220Vac(85V~264V) 50/60Hz, 25VA (220Vac)
- Communication: RS485
- Inputs: Pressure transmitter x1, Temperature sensor x1, Digital signal x2 (Run signal and defrost signal)
- Output: EEV output

# ELECTRIC EXPANSION VALVE CONTROLLER

## REFRIGERANTS

| Code | Ref. | Code | Ref. | Code | Ref. | Code | Ref. | Code | Ref. |
|---|---|---|---|---|---|---|---|---|---|
| 0 | R22 | 7 | R1234yf | 14 | R744(CO2) | 21 | R124 | 28 | R600a |
| 1 | R404A | 8 | R290 | 15 | R744A(N2O) | 22 | R717 | | |
| 2 | R410A | 9 | R450A | 16 | R32 | 23 | R407H | | |
| 3 | R134a | 10 | R513A | 17 | R245fa | 24 | R454C | | |
| 4 | R407C | 11 | R448A | 18 | R23 | 25 | R455A | | |
| 5 | R507 | 12 | R449A | 19 | R407A | 26 | R454B | | |
| 6 | R1234ze | 13 | R452A | 20 | R407F | 27 | R452B | | |

## DIMENSIONS

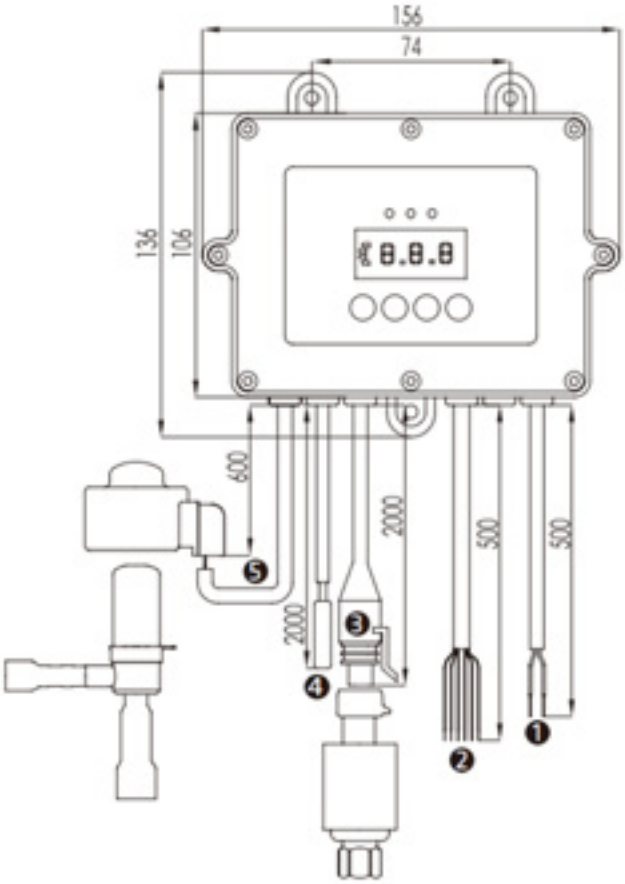


**SEC631-HD**
(integral coil)

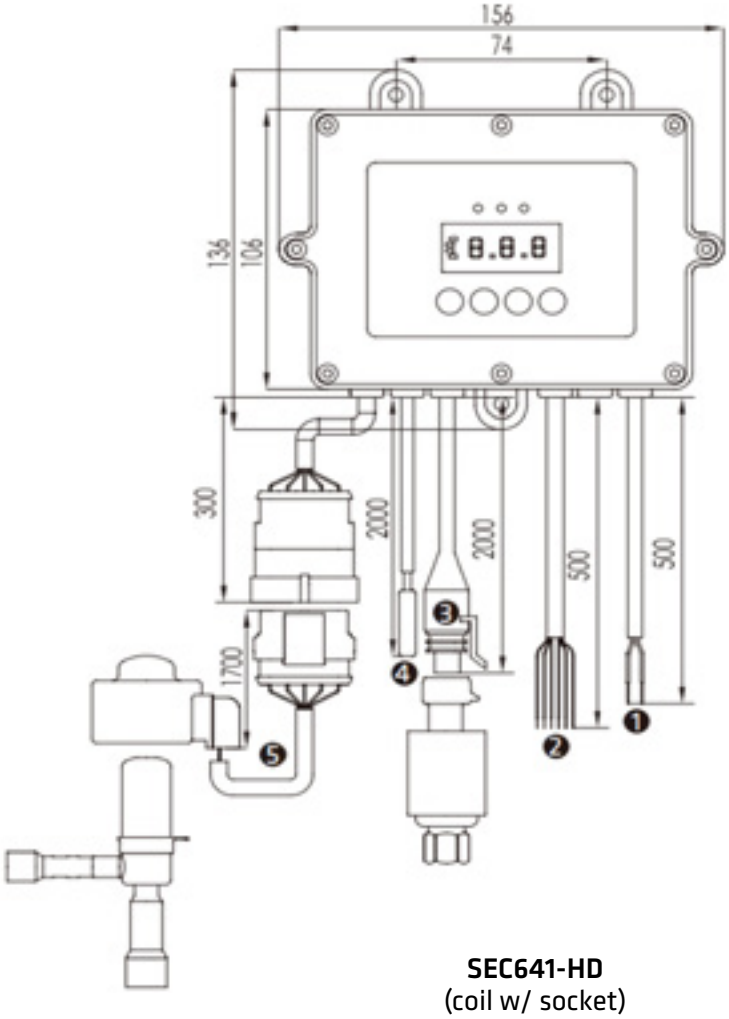


**SEC641-HD**
(coil w/ socket)

**Note:** the thickness of the controller is 31mm.

# ELECTRIC EXPANSION VALVE CONTROLLER

## FUNCTIONS

| No. | Laser Printed | Name | Function | Description |
|---|---|---|---|---|
| 1 | Power Supply | Power Supply | L (Red) | 220Vac (85V~264V) 50/60Hz |
| | | | N (Black) | |
| 2 | Digital Input /RS485 | Digital Input | RUN (Grey) | Connect to GND terminal to have the function working |
| | | | DEF (Yellow)* | |
| | | | GND (Black) | (1) work with RUN or DEF terminal<br>(2) work with 12Vdc terminal to supply power to remote display |
| | | RS485 Communication | B (Blue) | RS485 B- (TRX-) |
| | | | A (Orange) | RS485 A+ (TRX+) |
| | | | 12Vdc (Red) | 12Vdc output |
| 3 | Pressure Transmitter | Pressure Transmitter 0.5-3.5V | 5Vdc (Red) | Power Supply |
| | | | S1 (White) | Signal output |
| | | | GND (Black) | GND |
| 4 | Temperature Sensor | Temperature Sensor | GND (Red) | NTC 5KΩ, -50oC~+50oC |
| | | | T (Black) | |
| 5 | EEV Coil | Electronic Expansion valve Coil | 12Vdc | SEC631-HD integrated PQ-M24 coil<br>SEC641-HD PQ-M24 coil with waterproof connector (female and male) |
| | | | B | |
| | | | A | |
| | | | B | |
| | | | A | |

*** Note:** Defrost DEF (Yellow) signal is only used when the hot gas defrosting requires reversed operating of the electronic expansion valve (the fixed opening% of the EEV can be set up in the controller)

## ORDERING METHOD

| SEC631-HD with integrated coil | SEC641-HD with remote coil |
|---|---|
| **Included in the controller:**<br>Temperature sensor (NTC2A1)<br>EEV Coil integrated | |
| **Not included in the controller:**<br>Pressure transducer (To be selected according to the refrigerant and application)<br>Valve body (To be selected according to your need) | |

## ORDERING REFERENCES

| Name | Model | U11 code | Description |
|---|---|---|---|
| **SEC-HD with integrated coil** | | | |
| EEV Controller | SEC631-HD (1) | 10680004002 | PQ-M24 coil included |
| **SEC-HD with remote coil** | | | |
| EEV Controller | SEC641-HD (1) | 10680003902 | PQ-M24 coil included (remote) |
| **Pressure transducer** | | | |
| Pressure Transducer (CO2) | YCQB06L01 | 10185067202 | Input: 0~60bar, Output: 0.5-3.5V<br>Packard connector, Flare 7/16-20UNF-2B (Female) |
| Pressure Transducer (HC) - (inch) | YCQB02H165 | 10185087602 | Input: -1~20bar, Output: 0.5-3.5V<br>Packard connector, Solder ¼" (ODM) |
| Pressure Transducer (HC) - (mm) | YCQB02H166 | 10185087002 | Input: -1~20bar, Output: 0.5-3.5V<br>Packard connector, Solder 6mm (ODM) |
| Pressure Transducer (HFC) | YCQB02L171 | 10185060402 | Input: -1~20bar, Output: 0.5-3.5V<br>Packard connector, Flare 7/16-20UNF-2B (Female) |

**Note:** 1) Pressure transmitter and valve body are not included in the controller package.

# ELECTRIC EXPANSION VALVE CONTROLLER

## SPARE PARTS AND ACCESSORIES

| Name | Model | U11 code | Description |
|---|---|---|---|
| Pressure Transducer (CO2) | YCQB06L01 | 10185067202 | Input: 0~60bar, Output: 0.5-3.5V<br>Packard connector, Flare 7/16-20UNF-2B (Female) |
| Pressure Transducer (HC) (inch) | YCQB02H165 | 10185087602 | Input: -1~20bar, Output: 0.5-3.5V<br>Packard connector, Solder ¼" (ODM) |
| Pressure Transducer (HC) (mm) | YCQB02H166 | 10185087002 | Input: -1~20bar, Output: 0.5-3.5V<br>Packard connector, Solder 6mm (ODM) |
| Pressure Transducer (HFC) | YCQB02L171 | 10185060402 | Input: -1~20bar, Output: 0.5-3.5V<br>Packard connector, Flare 7/16-20UNF-2B (Female) |
| Temperature Sensor | NTC2A1 | 10665000102 | Cable length 2000mm |
| EEV Coil | PQ-M24012-000071 (1) | 10810212002 | PQ-M24 coil with waterproof connector 1700mm length |
| Remote Display | MD03-R4 | 10680002502 | For displaying and parameter setting |

**Note:** 1) Approved EEV models: LPF, LPF-T.

## PHOTOS OF ACCESSORIES

| Pressure Transducer (CO2/HFC) | Pressure Transducer (HC) | Temperature Sensor | EEV Coil with waterproof connector |
|---|---|---|---|
| | | | |

| Remote Display (Through panel mounting) |
|---|
| |

***VPF*** *SERIES*

# ELECTRONIC EXPANSION VALVE

VPF series electronic expansion valves are designed for commercial and industrial applications. Typical VPF applications are air conditioning and refrigeration systems or heat pumps. The valve controls the automatic adjustment of refrigerant flow rate and makes the system work under optimized conditions for the purpose of fast cooling or heating, precise temperature control and energy saving. The valve can also be used e.g. for suction line pressure controls. These valves provide bidirectional operation to control the refrigerant flow rate in heating or cooling mode.

## FEATURES

- ENERGY SAVING THANKS TO VERY PRECISE CAPACITY CONTROL: UP TO 3800 STEPS
- INTERNAL TIGHTNESS LIKE A SOLENOID VALVE
- OPTIMIZED FLOW PATH DESIGN FOR NOISE REDUCTION
- APPLICABLE FOR REVERSIBLE SYSTEMS LIKE HEAT PUMPS: BIDIRECTIONAL FLOW
- CORROSION RESISTANT DESIGN, LONG LIFETIME, HIGH RELIABILITY
- COMPACT DESIGN
- MODELS WITH INTEGRATED SIGHT GLASS ARE AVAILABLE
- MODELS FOR OIL FREE APPLICATIONS

### GENERAL SPECIFICATION

- Applicable for all common HCFC, HFC, HFO and flammable refrigerants such as: R134a, R513A, R404A, R407A, R407C, R407F, R450A, R452A, R452B, R410A, R507A, R1234yf, R1234ze, R290, R32, R454C, R455A, ...
- Cooling capacity: 54 to 1495 kW (R134a nominal capacity)
- Up to 3800 steps (full stroke); Valve starts opening with
  - VPF12.5, VPF25: 110 steps
  - VPF50... VPF400: 165 steps
- Medium temperature TS min./max.: -40°C / +90°C
- Ambient temperature min./max.: -40°C / +60°C
- Relative humidity: 0 to 100% RH
- Installation position:
  - Major flow direction from connection A to B
  - Installation in horizontal and vertical pipes possible
  - Installation position in horizontal lines with stepper motor preferably upwards
- Certifications: EAC, PED Declaration for fluids group 1&2

# ELECTRONIC EXPANSION VALVE

## ELECTRICAL PARAMETERS

- Rated voltage: 12VDC, rectangular wave
- Actuating mode: 2-phase 4-step permanent magnet stepping motor
- Excitation mode: 2 phase excitation, bi-pole actuation
- Coil resistance: 52 ± 5,2Ω/coil (20°C)
- Insulation coil class: E
- Protection class: IP 67

| | Voltage drive | Current drive |
|---|---|---|
| Excitation rate | 150 pps Max | 300 pps Max |
| Motion time from completely open to completely closed | VPF12.5...VPF50: 17,3s<br>VPF100: 23,3s<br>VPF150...VPF400: 25,3s | VPF12.5...VPF50: 8,7s<br>VPF100: 11,7s<br>VPF150...VPF400: 12,7s |
| Nominal motor current* | 124mA RMS per phase in control operation | 100mA RMS per phase in control operation |
| Peak motor current* | 238mA RMS per phase in control operation | 140mA RMS per phase in control operation |

*Specified motor currents are based on max. excitation rates

## MODEL DESIGNATIONS

| Position Number | Model Designation Legend | |
|---|---|---|
| 1 | **Product Code** | **Product Series** |
| | VPF | Electronic expansion valve with bi-pole stepper motor |
| 2 | **Capacity Size** | **Description** |
| | 12.5 | Digits for valve capacity size |
| | 25 | |
| | 50 | |
| | 100 | |
| | 150 | |
| | 250 | |
| | 400 | |
| 3 | **Connections Type** | **Description** |
| | H | Solder |
| 4 | **Valve Body** | **Description** |
| | 0...4 | With sight glass |
| | 5...9 | Without sight glass |
| 5 | **Pipe Connection** | **Description** |
| | 1...9 | Digit for pipe connection diameter |

## MODEL DESIGNATION EXAMPLE

| Position Number | | | | | According to Model Designation Legend |
|---|---|---|---|---|---|
| 1 | 2 | 3 | 4 | 5 | |
| **VPF** | 100 | H | 0 | 3 | Electronic expansion valve |
| VPF | **100** | H | 0 | 3 | Digits for capacity size |
| VPF | 100 | **H** | 0 | 3 | Connection: Solder |
| VPF | 100 | H | **0** | 3 | Valve body: With sight glass |
| VPF | 100 | H | 0 | **3** | Digit for pipe connection diameter |

# ELECTRONIC EXPANSION VALVE

## TECHNICAL PARAMETER

***VPF 12.5 to 150***

*MWP (Max Working Pressure) = 50 bar*

*MOPD (Max Operating Pressure Differential) A->B or B-> A = 39 bar*

| Model | Part Number[1)] | Valve Shape | Sight Glass | Connections ød ODF Inlet A x Outlet B | | Seat ø | Kv[2)] | PED Cat. Fluid | |
|---|---|---|---|---|---|---|---|---|---|
| | | | | [inch] | [mm] | [mm] | m³/h | Group 1 | Group 2 |
| VPF12.5H52 | 10130349502 | straight | without | 5/8 x 5/8 | 16 × 16 | 7,5 | 0,8 | Art. 4.3 | Art. 4.3 |
| VPF12.5H53 | 10130350202 | | | 7/8 x 7/8 | 22 × 22 | | | Art. 4.3 | Art. 4.3 |
| VPF12.5H58 | 10130342102 | L-shape | without | 5/8 x 5/8 | 16 × 16 | | | Art. 4.3 | Art. 4.3 |
| VPF12.5H59 | 10130349802 | | | 7/8 x 7/8 | 22 × 22 | | | Art. 4.3 | Art. 4.3 |
| VPF25H52 | 10130349202 | straight | without | 5/8 x 5/8 | 16 × 16 | 7,5 | 1,4 | Art. 4.3 | Art. 4.3 |
| VPF25H53 | 10130356202 | | | 7/8 x 7/8 | 22 × 22 | | | Art. 4.3 | Art. 4.3 |
| VPF25H58 | 10130343202 | L-shape | without | 5/8 x 5/8 | 16 × 16 | | | Art. 4.3 | Art. 4.3 |
| VPF25H59 | 10130356102 | | | 7/8 x 7/8 | 22 × 22 | | | Art. 4.3 | Art. 4.3 |
| VPF50H51 | 10130337702 | straight | without | 7/8 x 7/8 | 22 x 22 | 11,4 | 2,3 | Art. 4.3 | Art. 4.3 |
| VPF50H52 | 10130347002 | | | 7/8 x 1 1/8 | - | | | Art. 4.3 | Art. 4.3 |
| VPF50H53 | 10130356502 | | | 1 1/8 x 1 1/8 | - | | | Art. 4.3 | Art. 4.3 |
| VPF50H54 | 10130342302 | | | 1 1/8 x 1 3/8 | - | | | Cat. II | Art. 4.3 |
| VPF50H56 | 10130347102 | | | - | 22 x 28 | | | Art. 4.3 | Art. 4.3 |
| VPF50H57 | 10130347202 | | | - | 28 x 28 | | | Art. 4.3 | Art. 4.3 |
| VPF50H58 | 10130342402 | | | - | 28 x 35 | | | Cat. II | Art. 4.3 |
| VPF 50H01 | 10130341102 | straight | with | 7/8 x 7/8 | 22 x 22 | | | Art. 4.3 | Art. 4.3 |
| VPF 50H02 | 10130346702 | | | 7/8 x 1 1/8 | - | | | Art. 4.3 | Art. 4.3 |
| VPF 50H03 | 10130344802 | | | 1 1/8 x 1 1/8 | - | | | Art. 4.3 | Art. 4.3 |
| VPF50H04 | 10130342802 | | | 1 1/8 x 1 3/8 | - | | | Cat. II | Art. 4.3 |
| VPF50H06 | 10130346802 | | | - | 22 x 28 | | | Art. 4.3 | Art. 4.3 |
| VPF50H07 | 10130346902 | | | - | 28 x 28 | | | Art. 4.3 | Art. 4.3 |
| VPF50H08 | 10130342502 | | | - | 28 x 35 | | | Cat. II | Art. 4.3 |
| VPF100H51 | 10130347502 | straight | without | 1 1/8 x 1 1/8 | - | 14,4 | 4,0 | Cat. II | Art. 4.3 |
| VPF100H52 | 10130347602 | | | 1 1/8 x 1 3/8 | - | | | Cat. II | Art. 4.3 |
| VPF100H53 | 10130342602 | | | 1 3/8 x 1 3/8 | 35 x 35 | | | Cat. II | Art. 4.3 |
| VPF100H54 | 10130347702 | | | - | 28 x 28 | | | Cat. II | Art. 4.3 |
| VPF100H55 | 10130347802 | | | - | 28 x 35 | | | Cat. II | Art. 4.3 |
| VPF100H01 | 10130356802 | straight | with | 1 1/8 x 1 1/8 | - | | | Cat. II | Art. 4.3 |
| VPF100H02 | 10130347302 | | | 1 1/8 x 1 3/8 | - | | | Cat. II | Art. 4.3 |
| VPF100H03 | 10130356602 | | | 1 3/8 x 1 3/8 | 35 x 35 | | | Cat. II | Art. 4.3 |
| VPF100H05 | 10130347402 | | | - | 28 x 35 | | | Cat. II | Art. 4.3 |
| VPF100H06 | 10130343102 | | | - | 28 x 28 | | | Cat. II | Art. 4.3 |
| VPF150H01 | 10130357002 | L-shape | with | 1 1/8 x 1 3/8 | - | 14,8 | 7,7 | Cat. II | Art. 4.3 |
| VPF150H02 | 10130356702 | | | 1 5/8 x 1 5/8 | - | | | Cat. II | Art. 4.3 |

**Note:** 1) Extent of delivery: valve body (reference number for connection cable see in the following pages)
2) Kv values valid for the flow direction inlet A to outlet B
O.R =On Request

# ELECTRONIC EXPANSION VALVE

### *VPF 250 & 400*

*MWP (Max Working Pressure) = 45 bar / 34 bar for the VPF400H10 model*

*MOPD (Max Operating Pressure Differential) A->B or B -> A = 35 bar / 21 bar for the VPF400H10 model*

| Model | Part Number[1)] | Valve Shape | Sight Glass | Connections ød ODF Inlet A x Outlet B | | Seat ø | Kv[2)] | PED Cat. Fluid | |
|---|---|---|---|---|---|---|---|---|---|
| | | | | [inch] | [mm] | [mm] | m³/h | Group 1 | Group 2 |
| VPF250H41 | 10130481002 | straight | with | 1 1/8 x 1 1/8 | - | 25 | 11,9 | Cat. II | Art. 4.3 |
| VPF250H42 | 10130478402 | | | 1 3/8 x 1 3/8 | 35 x 35 | | | Cat. II | Art. 4.3 |
| VPF250H43 | 10130477302 | | | 1 5/8 x 1 5/8 | - | | | Cat. II | Art. 4.3 |
| VPF250H44 | 10130481102 | | | - | 28 x 28 | | | Cat. II | Art. 4.3 |
| VPF250H45 | 10130481202 | | | - | 42 x 42 | | | Cat. II | Art. 4.3 |
| VPF400H01 | 10130344902 | straight | with | 1 5/8 x 1 5/8 | - | 33 | 17,0 | Cat. II | Cat. I |
| VPF400H02 | 10130349002 | | | - | 42 x 42 | | | Cat. II | Cat. I |
| VPF400H03 | 10130343302 | | | 2 1/8 x 2 1/8 | 54 x 54 | | | Cat. II | Cat. I |
| VPF400H10 | 10130426002 | angle | with | 2 1/8 x 2 5/8 | 54 x 67 | 28,5 | 14,5 | O.R. | Cat. I |

**Note:** 1) Extent of delivery: valve body (reference number for connection cable see in the following pages)
2) Kv values valid for the flow direction inlet A to outlet B
O.R =On Request

### *VPF models for oil free application*

| Model | Part Number | Valve Shape | Sight Glass | Connections ød ODF Inlet A x Outlet B | | Kv[2)] | PED Cat Fluid Group 1 | PED Cat Fluid Group 2 |
|---|---|---|---|---|---|---|---|---|
| | | | | [inch] | [mm] | [m³/h] | | |
| VPF12.5H82 | 10130458302 | straight | Without | 5/8 x 5/8 | 16 × 16 | 0.8 | Art. 4.3 | Art. 4.3 |
| VPF25H83 | 10130438302 | straight | | 7/8 x 7/8 | 22 × 22 | 1.3 | Art. 4.3 | Art. 4.3 |
| VPF50H81 | 10130458902 | straight | | 7/8 x 7/8 | 22 × 22 | 2.4 | Art. 4.3 | Art. 4.3 |
| VPF50H83 | 10130432402 | straight | With | 1 1/8 x 1 1/8 | - | | Art. 4.3 | Art. 4.3 |
| VPF100H81 | 10130467502 | straight | | 1 1/8 x 1 1/8 | - | 4.0 | Cat. I | Art. 4.3 |
| VPF100H83 | 10130458402 | straight | | 1 3/8 x 1 3/8 | 35 x 35 | | Cat. I | Art. 4.3 |
| VPF150H82 | 10130458502 | angle | | 1 5/8 x 1 5/8 | - | 7.7 | Cat. II | Art. 4.3 |
| VPF250H92 | 10130492602 | straight | | 1 3/8 x 1 3/8 | | 14 | Cat. II | Art. 4.3 |
| VPF250H93 | 10130477402 | straight | | 1 5/8 x 1 5/8 | - | | Cat. II | Art. 4.3 |
| VPF400H81 | 10130461902 | straight | | 1 5/8 x 1 5/8 | - | 17 | Cat. II | Cat. I |
| VPF400H83 | 10130425802 | straight | | 2 1/8 x 2 1/8 | 54 x 54 | | Cat. II | Cat. I |

# ELECTRONIC EXPANSION VALVE

## COOLING CAPACITIES

| Model | Steps Completely Open | Nominal Cooling Capacity[1] [kW] | | | | | | | | | | | | |
|---|---|---|---|---|---|---|---|---|---|---|---|---|---|---|
| | | R134a | R407A | R407C | R407F | R404A R507A | R410A | R32 | R290 | R454B | R454C | R455A | R1234yf | R1234ze |
| VPF12.5 | 2600 | 54 | 67 | 71 | 76 | 50 | 82 | 126 | 77.4 | 101.2 | 66.1 | 72.8 | 41.9 | 43 |
| VPF25 | 2600 | 116 | 144 | 152 | 162 | 108 | 176 | 262 | 160.8 | 210.1 | 137.2 | 151.1 | 87 | 92 |
| VPF50 | 2600 | 221 | 275 | 290 | 310 | 206 | 336 | 527 | 323.1 | 422.3 | 275.7 | 303.6 | 173 | 175 |
| VPF100 | 3500 | 319 | 397 | 418 | 447 | 297 | 484 | 748 | 458.9 | 599.7 | 391.6 | 431.3 | 248 | 253 |
| VPF150 | 3800 | 574 | 714 | 752 | 804 | 534 | 871 | 1294 | 794 | 1036 | 676 | 745 | 435 | 455 |
| VPF250 | 3800 | 892 | 1108 | 1168 | 1249 | 830 | 1353 | 2073 | 1272 | 1661 | 1084 | 1194 | 700 | 706 |
| VPF400 | 3800 | 1495 | 1857 | 1958 | 2094 | 1392 | 2269 | 3475 | 2133 | 2784 | 1818 | 2001 | 1171 | 1183 |
| VPF400 | 2700 | 1301 | 1616 | 1703 | 1822 | 1211 | N.C | N.C | N.C | N.C | N.C | N.C | N.C | 1029 |

**Note:** 1) Nominal conditions: Condensing temperature = 38°C / Evaporating temperature = +4,4°C / liquid temperature = 37°C
2) For refrigerants with glide, performances are given in dew point
N.C = Not Certified

For others running points, others refrigerants, or oil free models, please contact your local support or download our selection software – Sanhua Selector with the link: www.sanhuaeurope.com

# ELECTRONIC EXPANSION VALVE

## FLOW CHARACTERISTIC

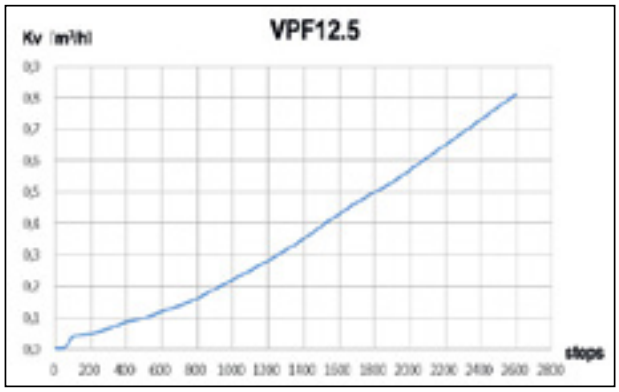


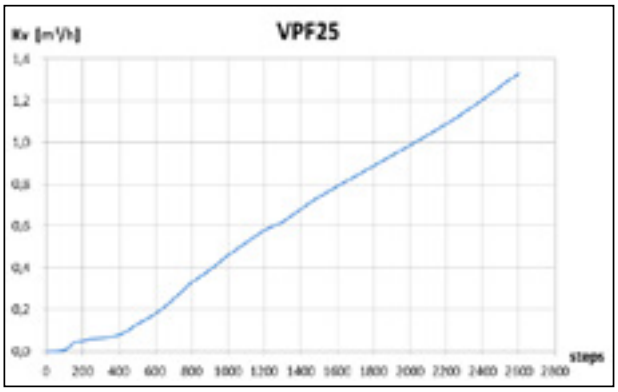


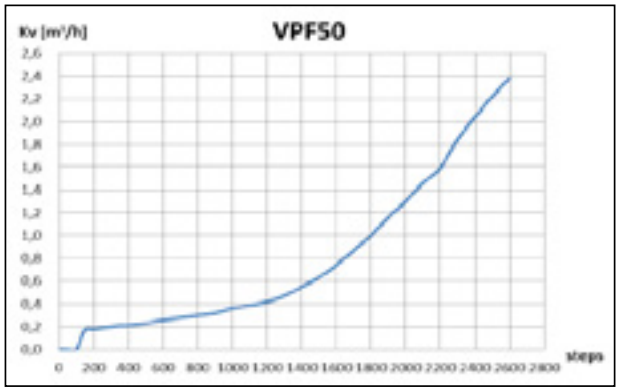


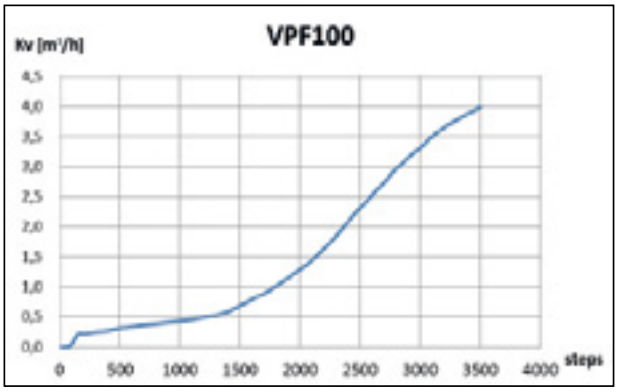


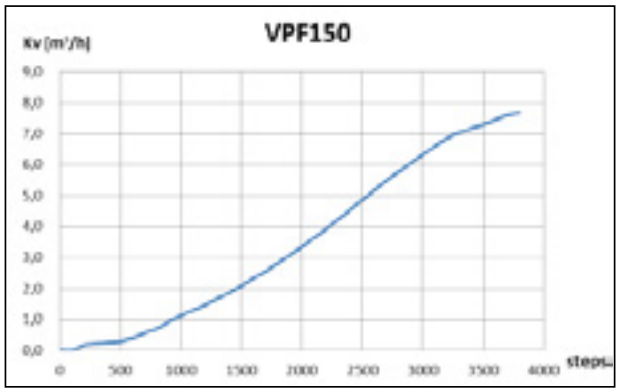


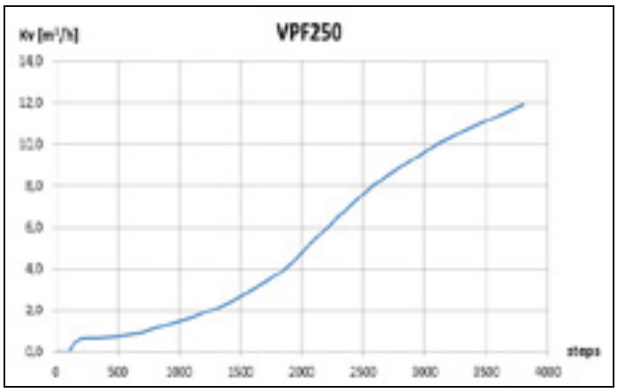


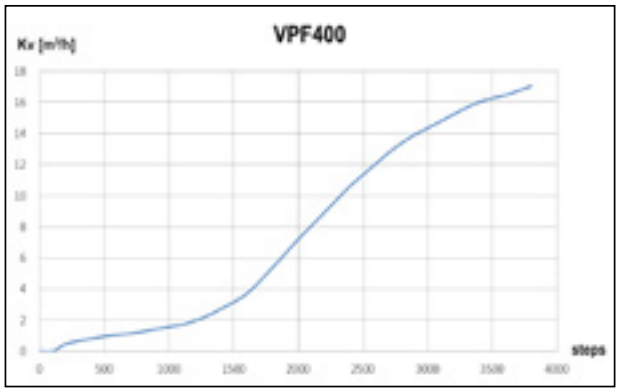

# ELECTRONIC EXPANSION VALVE

## DIMENSIONS

| Model | Part Number | Dimensions [ mm ] | | | | | | | | Weight (kg) |
|---|---|---|---|---|---|---|---|---|---|---|
| | | L1 | L2 | L3 | L4 | H1 | H2 | H4 | øD1 | |
| VPF12.5H52 | 10130349502 | 60 | 60 | 13 | 13 | 25,6 | 13 | 136 | 52 | 0.5 |
| VPF12.5H53 | 10130350202 | 60 | 60 | 20 | 20 | 25,6 | 13 | 136 | 52 | |
| VPF12.5H58 | 10130342102 | 60 | - | 13 | 13 | 22,5 | 66,5 | 178 | 52 | |
| VPF12.5H59 | 10130349802 | 60 | - | 20 | 20 | 22,5 | 66,5 | 178 | 52 | |
| VPF12.5H82 | 10130458302 | 60 | 60 | 13 | 13 | 13 | 136 | 52 | 52 | |
| VPF25H52 | 10130349202 | 60 | 60 | 13 | 13 | 25,6 | 13 | 136 | 52 | |
| VPF25H53 | 10130356202 | 60 | 60 | 20 | 20 | 25,6 | 13 | 136 | 52 | |
| VPF25H58 | 10130343202 | 60 | - | 13 | 13 | 22,5 | 66,5 | 178 | 52 | |
| VPF25H59 | 10130356102 | 60 | - | 20 | 20 | 22,5 | 66,5 | 178 | 52 | |
| VPF25H83 | 10130438302 | 60 | 60 | 20 | 20 | 25.6 | 13 | 136 | 52 | |

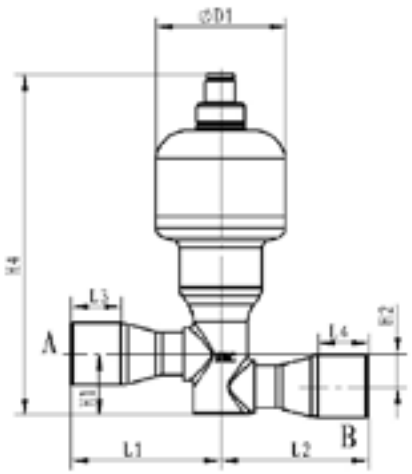


VPF12.5, VPF25, Straight version

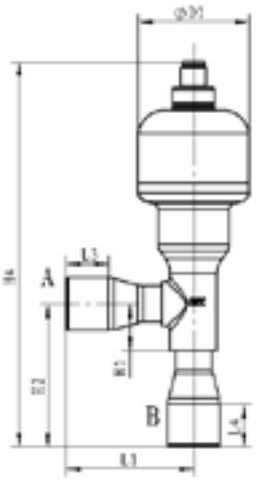


VPF12.5, VPF25, L-Shape version

# ELECTRONIC EXPANSION VALVE

| Model | Part Number | Dimensions [ mm ] | | | | | | | | | Weight (kg) |
|---|---|---|---|---|---|---|---|---|---|---|---|
| | | L | L1 | L2 | L3 | L4 | H1 | H2 | H4 | øD1 | |
| VPF50H51 | 10130337702 | 112 | 56 | 56 | 20 | 20 | 17 | 20,5 | 166 | 52 | 1.1 |
| VPF50H52 | 10130347002 | 122 | 56 | 66 | 20 | 25 | 17 | 20,5 | 166 | 52 | |
| VPF50H53 | 10130356502 | 132 | 66 | 66 | 25 | 25 | 17 | 20,5 | 166 | 52 | |
| VPF50H54 | 10130342302 | 142 | 66 | 76 | 25 | 30 | 17 | 20,5 | 166 | 52 | |
| VPF50H56 | 10130347102 | 122 | 56 | 66 | 20 | 25 | 17 | 20,5 | 166 | 52 | |
| VPF50H57 | 10130347202 | 132 | 66 | 66 | 25 | 25 | 17 | 20,5 | 166 | 52 | |
| VPF50H58 | 10130342402 | 142 | 66 | 76 | 25 | 30 | 17 | 20,5 | 166 | 52 | |
| VPF50H01 | 10130341102 | 112 | 56 | 56 | 20 | 20 | 17 | 20,5 | 166 | 52 | |
| VPF50H02 | 10130346702 | 122 | 56 | 66 | 20 | 25 | 17 | 20,5 | 166 | 52 | |
| VPF50H03 | 10130344802 | 132 | 66 | 66 | 25 | 25 | 17 | 20,5 | 166 | 52 | |
| VPF50H04 | 10130342802 | 142 | 66 | 76 | 25 | 30 | 17 | 20,5 | 166 | 52 | |
| VPF50H06 | 10130346802 | 122 | 56 | 66 | 20 | 25 | 17 | 20,5 | 166 | 52 | |
| VPF50H07 | 10130346902 | 132 | 66 | 66 | 25 | 25 | 17 | 20,5 | 166 | 52 | |
| VPF50H08 | 10130342502 | 142 | 66 | 76 | 25 | 30 | 17 | 20,5 | 166 | 52 | |
| VPF50H81 | 10130458902 | 122 | 56 | 56 | 20 | 20 | 17 | 20.5 | 166 | 52 | |
| VPF50H83 | 10130432402 | 132 | 66 | 66 | 25 | 25 | 17 | 20.5 | 166 | 52 | |
| VPF100H51 | 10130347502 | 132 | 66 | 66 | 25 | 25 | 17 | 20,5 | 166 | 52 | |
| VPF100H52 | 10130347602 | 142 | 66 | 76 | 25 | 30 | 17 | 20,5 | 166 | 52 | |
| VPF100H53 | 10130342602 | 152 | 76 | 76 | 30 | 30 | 17 | 20,5 | 166 | 52 | |
| VPF100H54 | 10130347702 | 132 | 66 | 66 | 25 | 25 | 17 | 20,5 | 166 | 52 | |
| VPF100H55 | 10130347802 | 142 | 66 | 76 | 25 | 30 | 17 | 20,5 | 166 | 52 | |
| VPF100H01 | 10130356802 | 132 | 66 | 66 | 25 | 25 | 17 | 20,5 | 166 | 52 | |
| VPF100H02 | 10130347302 | 142 | 66 | 76 | 25 | 30 | 17 | 20,5 | 166 | 52 | |
| VPF100H03 | 10130356602 | 152 | 76 | 76 | 30 | 30 | 17 | 20,5 | 166 | 52 | |
| VPF100H05 | 10130347402 | 142 | 66 | 76 | 25 | 30 | 17 | 20,5 | 166 | 52 | |
| VPF100H06 | 10130343102 | 132 | 66 | 66 | 25 | 25 | 17 | 20,5 | 166 | 52 | |
| VPF100H81 | 10130467502 | 132 | 66 | 66 | 25 | 25 | 17 | 20.5 | 166 | 52 | |
| VPF100H83 | 10130458402 | 152 | 76 | 76 | 30 | 30 | 17 | 20.5 | 166 | 52 | |

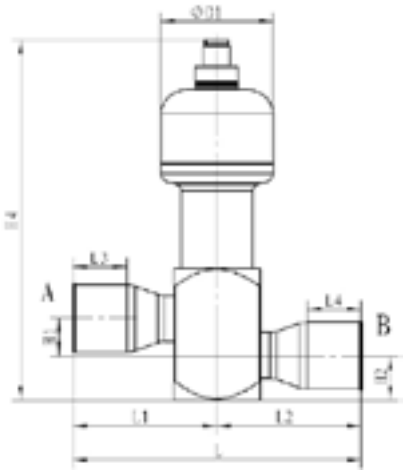


VPF50, VPF100 without sight glass

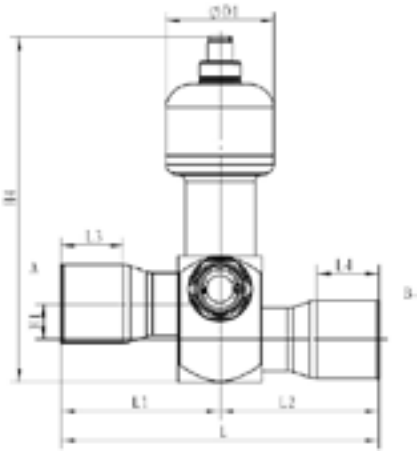

VPF50, VPF100 with sight glass

# ELECTRONIC EXPANSION VALVE

| Model | Part Number | Dimensions [ mm ] | | | | | | | | | Weight (kg) |
|---|---|---|---|---|---|---|---|---|---|---|---|
| | | L | L1 | L2 | L3 | L4 | H1 | H2 | H4 | øD1 | |
| VPF150H01 | 10130357002 | | 76 | | 30 | 25 | 24 | 70 | 195 | 52 | |
| VPF150H02 | 10130356702 | - | 76 | - | 25 | 25 | 33,5 | 89 | 212 | 52 | 1.0 |
| VPF150H82 | 10130458502 | | 76 | | 25 | 25 | 33,5 | 89 | 212 | 52 | |

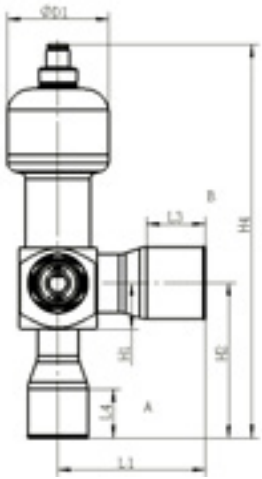

VPF150 with sight glass

# ELECTRONIC EXPANSION VALVE

| Model | Part Number | Dimensions [ mm ] | | | | | | | | | Weight (kg) |
|---|---|---|---|---|---|---|---|---|---|---|---|
| | | L | L1 | L2 | L3 | L4 | L5 | H3 | B1 | øD1 | |
| VPF250H41 | 10130481002 | 186 | 84 | 82 | 25 | 25 | 189 | 117 | 24 | 52 | |
| VPF250H42 | 10130478402 | 186 | 94 | 92 | 30 | 30 | 189 | 117 | 24 | 52 | |
| VPF250H43 | 10130477302 | 186 | 94 | 92 | 25 | 25 | 189 | 117 | 24 | 52 | |
| VPF250H44 | 10130481102 | 186 | 84 | 82 | 25 | 25 | 189 | 117 | 24 | 52 | 1.1 |
| VPF250H45 | 10130481202 | 186 | 94 | 92 | 25 | 25 | 189 | 117 | 24 | 52 | |
| VPF250H92 | 10130492602 | 186 | 94 | 92 | 25 | 25 | 189 | 117 | 24 | 52 | |
| VPF250H93 | 10130477402 | 186 | 94 | 92 | 25 | 25 | 189 | 117 | 24 | 52 | |
| VPF400H01 | 10130344902 | 203 | 104 | 99 | 30 | 30 | 198 | 118 | 24 | 52 | |
| VPF400H02 | 10130349002 | 203 | 104 | 99 | 30 | 30 | 198 | 118 | 24 | 52 | 1.7 |
| VPF400H03 | 10130343302 | 240 | 121 | 119 | 30 | 30 | 218 | 118 | 24 | 52 | |
| VPF400H10 | 10130426002 | 286 | - | - | 36 | 32 | - | - | - | - | 3.7 |
| VPF400H81 | 10130461902 | 203 | 104 | 99 | 30 | 30 | 198 | 118 | 24 | 52 | 1.7 |
| VPF400H83 | 10130425802 | 240 | 121 | 119 | 30 | 30 | 218 | 118 | 24 | 52 | 1.7 |

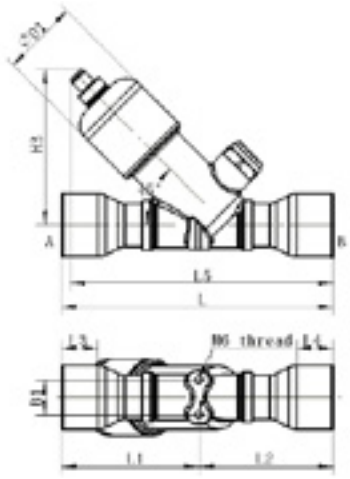

VPF250with sight glass

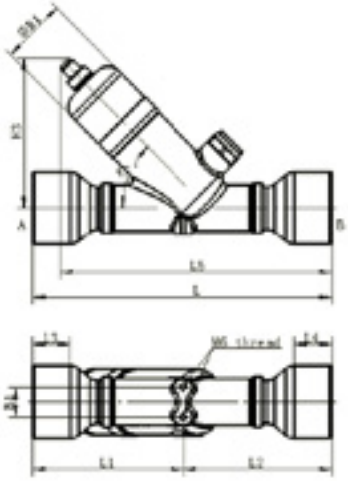

VPF400 with sight glass

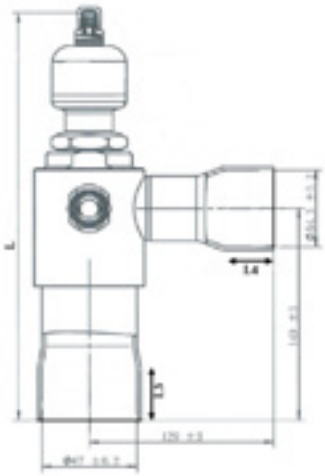

VPF400H10

# ELECTRONIC EXPANSION VALVE

## ACCESSORIES

*Connection Cable*

| Model | Part Number | Cable Length (L) [m] | Tolerance [mm] | IP |
|---|---|---|---|---|
| Y02A | 20130674902 | 2000 | ± 40 | 67 |
| Y04A | 20130675002 | 4000 | ± 80 | 67 |
| Y08A | 20130675102 | 8000 | ± 160 | 67 |

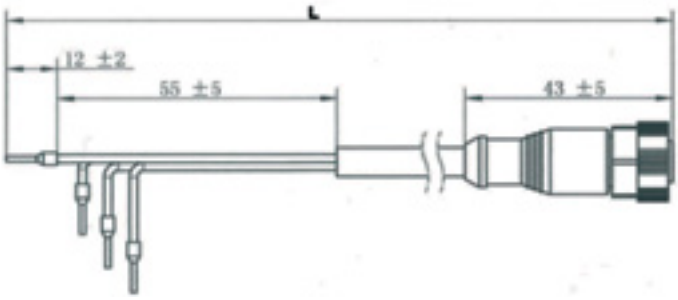



SANHUA

Technical information

**sanhuaeurope.com**

**DOWNLOAD NOW**

*OUR ONLINE*

**CATALOGUE**

# Sanhua Selector

# SELECT THE RIGHT PRODUCT

SANHUA

SanhuaSelector.com

***VSD2010*** *SERIES*

# ELECTRONIC EXPANSION VALVE DRIVER

## FEATURES

- UNIPOLAR EEV MOTOR DRIVER, SUITABLE FOR SANHUA DPF / LPF SERIES
- 0~10VDC OR 4~20mA ANALOG SIGNAL INPUT, CONTROL EEV OPENING
- MODEL WITH SUPERCAPACITOR AVAILABLE
- SMALL SIZE, SLIDE DESIGN, EASY TO INSTALL

### GENERAL SPECIFICATIONS

- Suitable 1-2 phase unipolar type EEV, E.g DPF & LPF series.
- Operating temperature: -30 ~ +55°C
- Storage temperature: -30 ~ +55°C
- Relative humidity: ≤90%RH
- Dimension: 102(W)mm×100(H)mm×44(D)mm (with terminal)
- Protection level: IP20
- Certification: CE Declaration according to EMC

# ELECTRONIC EXPANSION VALVE DRIVER

## ELECTRICAL PARAMETERS

- Power supply:

| | |
|---|---|
| VSD2010 | 24Vac (20~28Vac) 50/60Hz 25VA or 24Vdc (20~28Vdc) 12W, class 2 |
| VSD2010P | 24Vac (20~28Vac) 50/60Hz 35VA or 24Vdc (20~28Vdc) 15W, class 2 |

- Inputs: 4~20mA or 0~10VDC analog signal
- Output: 5 wires EEV output
- Self-holding mechanism: Maintain excitation in stop position min. 0.1s
- Drive speed: 30pps (normal operation) / 90pps (during supercapacitor close valve)

## MODEL LIST

| Model | Part Number | Detail |
|---|---|---|
| VSD2010 | 10685001002 | Standard model |
| VSD2010P | 10685000902 | Model with supercapacitor inside |

## DIMENSIONS (in mm)

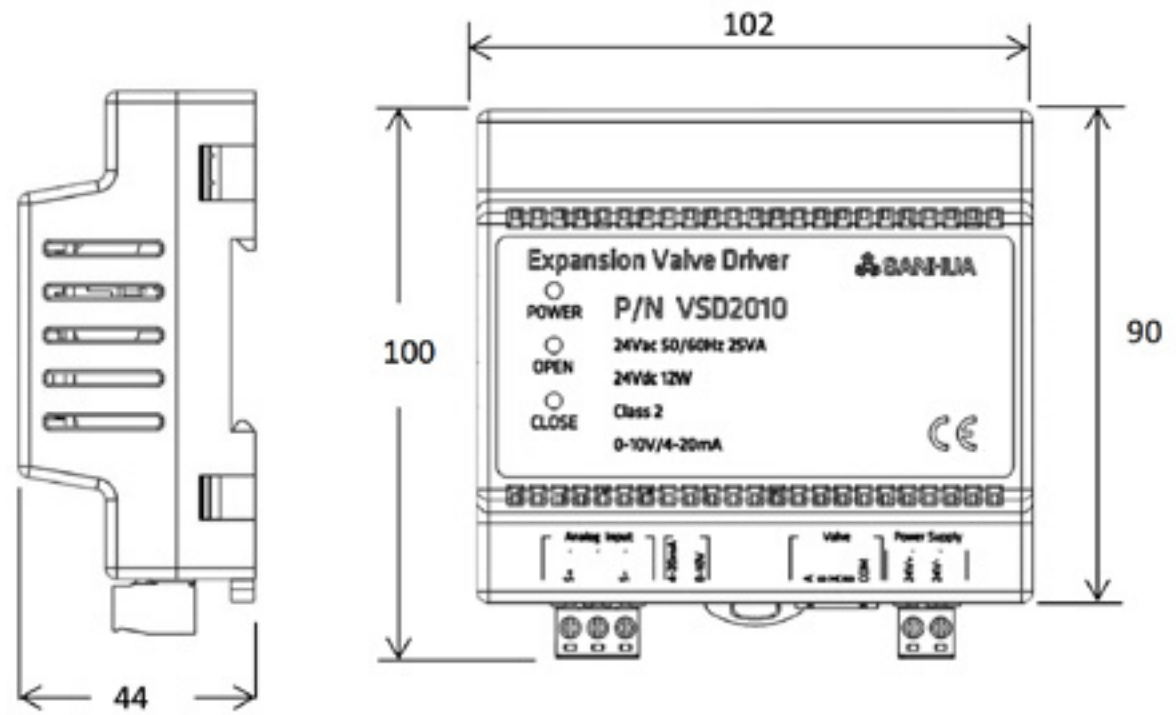

***VSD1002*** *SERIES*

# ELECTRONIC EXPANSION VALVE DRIVER

## FEATURES

- CONSTANT CURRENT CONTROL STEPPER MOTOR, PRECISE DRIVE CURRENT
- 0~10VDC OR 4~20MA ANALOG SIGNAL INPUT, CONTROL EEV OPENING
- FORCED OPEN/CLOSE VALVE CONTROL TO FACILITATE DEBUGGING
- SUPPORT MODBUS COMMUNICATION, UP TO 32 CASCADES
- SMALL SIZE, SLIDE DESIGN, EASY TO INSTALL

### GENERAL SPECIFICATION

- Suitable for all VPF series EEV
- Operating temperature: -30~+55°C
- Storage temperature: -30 ~ +55°C
- Relative humidity: ≤90%RH
- Dimension: 102(W)mm×90(H)mm×43.5(D)mm
- Protection level: IP20
- Certification: UL, CE Declaration according to EMC

### ELECTRICAL PARAMETERS

- Power supply:
  24Vac (20~28), 50/60Hz
  24Vdc (20~28), class 2
- Power consumption: Max 6W at 24Vdc
- Terminals: Spacing 5.08mm Pluggable
- Inputs: 4~20mA or 0~10VDC analog signal
- Output: 4 wires EEV output
- Communication: RS485

# ELECTRONIC EXPANSION VALVE DRIVER

## MODEL LIST

| Model | Part Number | Detail |
|---|---|---|
| VSD1002 | 10685000202 | Standard model |
| VSD1002P | 10685000302 | Model with battery backup inside |

## TECHNICAL PARAMETERS

*Pulse for different VPF models*

| Pulse | VPF models |
|---|---|
| 2700 | VPF12.5 VPF25 VPF50 |
| 3500 | VPF100 |
| 3800 | VPF150 VPF250 VPF400 |

## DIMENSIONS

*(in mm)*

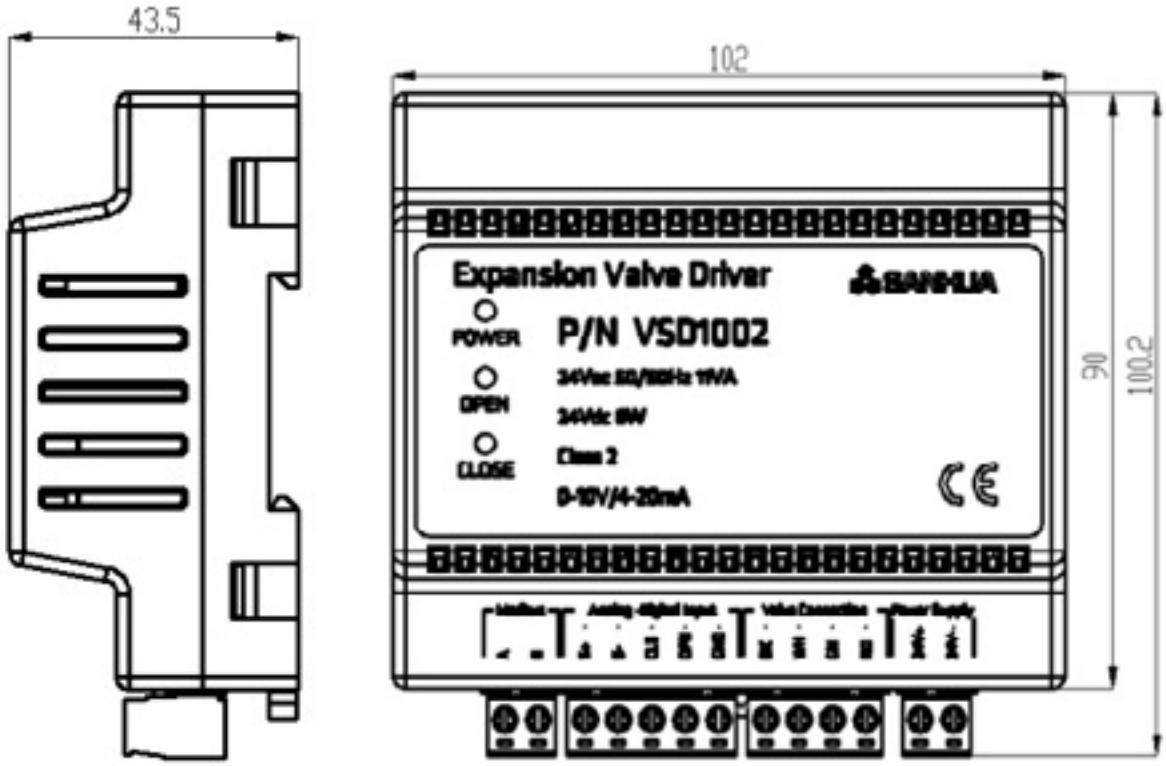

***VSD2001*** *SERIES*

# ELECTRONIC EXPANSION VALVE DRIVER

## FEATURES

- DRIVER FOR TWO IN DEPENDENT EEV
- UNIPOLAR/ BIPOLAR EEV CAN BE SELECTED INDEPENDENTLY
- SUITABLE FOR SANHUA DPF / LPF / VPF SERIES
- 0~10VDC OR 4~20mA ANALOG SIGNAL INPUT, CONTROL EEV OPENING
- SMALL SIZE, SLIDE DESIGN, EASY TO INSTALL

### GENERAL SPECIFICATIONS

- Operating temperature: -30 ~ +55°C
- Storage temperature: -30 ~ +55°C
- Relative humidity: ≤ 95%RH
- Dimension: 102(W)mm×111(H)mm×44(D)mm (with terminals)
- Protection level: IP20
- Certification: CE Declaration according to EMC

### ELECTRICAL PARAMETERS

- Power supply:
  24Vac (20~28), 50/60Hz, 60VA
  24Vdc (20~28), 30W, class 2
- Inputs: 4~20mA or 0~10VDC analog signal
- Output: Unipolar / Bipolar EEV output
- Self-holding mechanism:
  Maintain excitation in stop position min. 0.1s
- Drive speed: 200pps (30-200pps can be selected)

# ELECTRONIC EXPANSION VALVE DRIVER

## ORDERING

| Model | Part Number | Detail |
|---|---|---|
| VSD2001 | 10685000602 | Standard model |
| MD02-R5 | 10680002602 | Manual operator |

## DIMENSIONS (in mm)

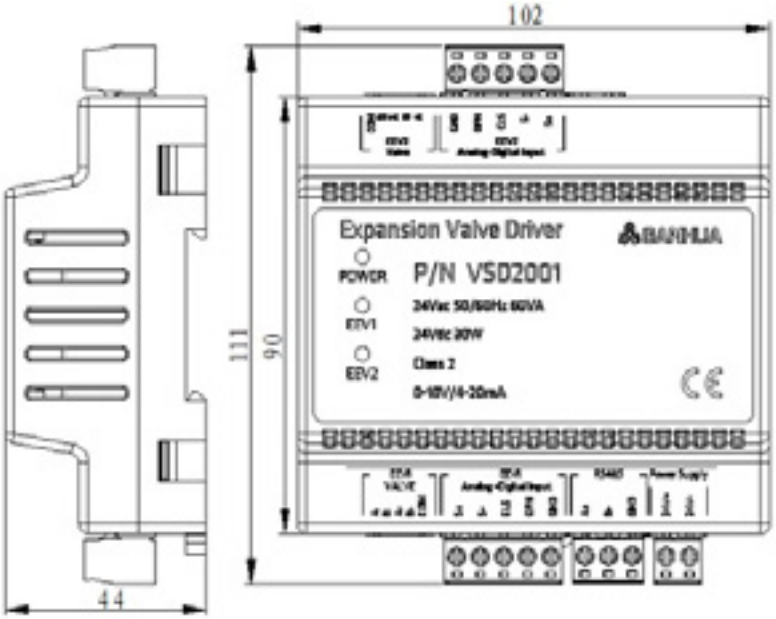


## DIMENSIONS (in mm)

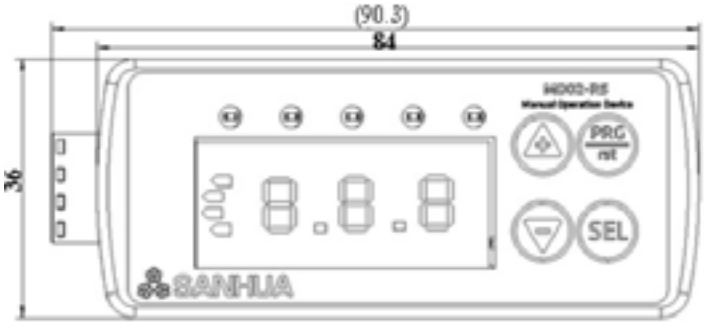


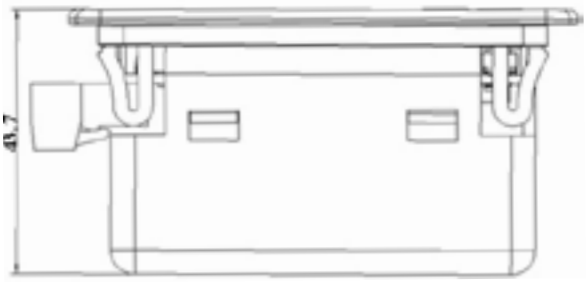

***SD2*** *SERIES*

# VARIABLE SPEED DRIVE

SANHUA SD2 variable speed drive series are dedicated to BLDC compressor and fans.

## FEATURES

- OPTIMIZED FOR HVAC&R APPLICATIONS SUCH AS HEAT PUMP, AIR CONDITIONING, REFRIGERATION RACKS AND CONDENSING UNITS.
- EXTENDED SPEED RANGE ALLOWING TO REDUCE THE NUMBER OF SHORT CYCLE AND PROVIDE MORE COOLING CAPACITY
- CUSTOMIZABLE HEATSINK ACCORDING TO THE CONFIGURATION OF YOUR UNITS
- REFRIGERANT COOLING AVAILABLE WITH EASY SERVICEABILITY
- THROUGH PANEL MOUNTING FOR LOWER FOOTPRINT
- COMPATIBLE WITH NUMEROUS OF HERMETIC BLDC COMPRESSOR. ALL TESTED IN OUR CERTIFIED TUV LABORATORY AT DIFFERENT CONDITIONS.
- DRIVE ALREADY SET ACCORDING TO YOUR COMPRESSOR AND YOUR APPLICATION

### GENERAL SPECIFICATIONS

- Adapted for application using A3 refrigerants
- Operating temperature: -25°C to +65°C
- Storage temperature: -40°C to +85°C
- Relative humidity: ≤ 95%RH
- Safe Torque Off (STO)
- Harmonic compliant according to EMC Directive (2014/30/EU)
- Certification: UL, CE Declaration according to low voltage directive
- Compliant with pollution degree 3 environment
- Installation method: wall mounting with screws
- Works well with Sanhua DPF and LPF EEVs

### ELECTRICAL SPECIFICATIONS

- Power supply:
  1Ph, 230VAC ±20%, 50/60Hz
  3Ph, 400VAC ±20%, 50/60Hz
- Modbus RTU (RS485)
- Pluggable terminals
- Analogue Input – Speed reference
- High Pressure switch
- NTC probe

# VARIABLE SPEED DRIVE

## MODEL DESIGNATION

| N° | | | | | | | Model Designation Legend |
|---|---|---|---|---|---|---|---|
| 1 | 2 | 3 | 4 | 5 | 6 | 7 | |
| **SD2** | 011 | A1 | H | 0 | X | A | SANHUA SD2 variable speed drive series |
| SD2 | **011** | A1 | H | 0 | X | A | **Output Current (Amps)**<br>011: 11A-RMS (Single Phase)<br>015: 15A-RMS (Single/Three Phase)<br>020: 20A-RMS (Single/Three Phase)<br>025: 25A-RMS (Three Phase)<br>032: 32A-RMS (Three Phase)<br>037: 37A-RMS (Three Phase)<br>045: 45A-RMS (Three Phase) |
| SD2 | 011 | **A1** | H | 0 | X | A | **Input Power Supply (VAC)**<br>A1: 1P 94-135VAC 50Hz (Under Development)<br>A2: 1P 220-240VAC 50Hz/60HzMP<br>B2: 3P 200-260VAC 60Hz (Under Development)<br>B4: 3P 380-415VAC 50Hz/60HzMP<br>C4: 3P 420-528VAC 60Hz (Under Development)<br>C5: 3P 520-630VAC 50Hz (Under Development) |
| SD2 | 011 | A1 | **H** | 0 | X | A | **Cooling Version**<br>A: Active Air Cooling FAN (Under Development)<br>H: Horizontal Heat Sink Cooled Finned MP<br>V: Vertical Hea t Sink Cooled Finned MP<br>F: Flat Plate Fluid Cooled MP |
| SD2 | 011 | A1 | H | **0** | X | A | **IP CLASS / Housing**<br>0: IP00 W/O Enclosure MP<br>2: IP20 Plastic Enclosure MP<br>5: IP54 (Under Development) |
| SD2 | 011 | A1 | H | 0 | **X** | A | **Drive Version**<br>X: Prototype Sample or Production Pilot<br>S: Mass Production Single Package<br>M: Mass Production Multi Package |
| SD2 | 011 | A1 | H | 0 | X | **A** | **Version Index:**<br>A: First Edition of each Sample or MP<br>B: Second Edition of each Sample or MP |

# VARIABLE SPEED DRIVE

## ORDERING METHOD

All SD2 drives are tested in our TÜV certified laboratory. This ensures a perfect matching for your application.
Contact your sales representative for the drive selection and best advice adapted to your application.
SD2 are available in different cooling type (see below).

**A Cooling type :**

Horizontal Finned

Vertical Finned

Flat plate

| Type | Max. output Current | Model | Cooling Type | SANHUA U11 Code | Frame size |
|---|---|---|---|---|---|
| 1PH 2.6KW Inverter IP20 | 11 A | SD2011A2H2XA000 | Horizontal Finned | 10501030801 | 1 |
| | | SD2011A2V2XA000 | Vertical Finned | 10501031301 | 1 |
| | | SD2011A2F2XA000 | Flat Plate | 10501034301 | 1 |
| 1PH 3.8KW Inverter IP20 | 15 A | SD2015A2H2XA000 | Horizontal Finned | 10501030101 | 1 |
| | | SD2015A2V2XA000 | Vertical Finned | 10501031401 | 1 |
| | | SD2015A2F2XA000 | Flat Plate | 10501034401 | 1 |
| 1PH 5.0KW Inverter IP20 | 20 A | SD2020A2H2XA000 | Horizontal Finned | 10501030201 | 2 |
| | | SD2020A2V2XA000 | Vertical Finned | 10501031501 | 2 |
| | | SD2020A2F2XA000 | Flat Plate | 10501034101 | 2 |
| 3PH 3.8KW Inverter IP20 | 15 A | SD2015B4H2XA000 | Horizontal Finned | 10501030401 | 3 |
| | | SD2015B4V2XA000 | Vertical Finned | 10501031601 | 3 |
| | | SD2015B4F2XA000 | Flat Plate | 10501034501 | 3 |
| 3PH 5.0KW Inverter IP20 | 20 A | SD2020B4H2XA000 | Horizontal Finned | 10501030501 | 3 |
| | | SD2020B4V2XA000 | Vertical Finned | 10501031701 | 3 |
| | | SD2020B4F2XA000 | Flat Plate | 10501034601 | 3 |
| 3PH 8.0KW Inverter IP20 | 25 A | SD2025B4H2XA000 | Horizontal Finned | 10501030601 | 3 |
| | | SD2025B4V2XA000 | Vertical Finned | 10501031801 | 3 |
| | | SD2025B4F2XA000 | Flat Plate | 10501034701 | 3 |
| 3PH 11.5KW Inverter IP20 | 32 A | SD2032B4H2XA000 | Horizontal Finned | 10501033701 | 3 |
| | | SD2032B4V2XA000 | Vertical Finned | 10501033501 | 3 |
| | | SD2032B4F2XA000 | Flat Plate | 10501034201 | 3 |
| 3PH 15KW Inverter IP20 | 37 A | SD2037B4V2XA000 | Horizontal Finned | 10501039101 | 4 |
| | | SD2037B4H2XA000 | Vertical Finned | 10501039001 | 4 |
| | | SD2037B4F2XA000 | Flat Plate | 10501039201 | 4 |
| | | SD2037B4A2XA000 | Active cooling* | 10501039301 | 4 |
| 3PH 18,5KW Inverter IP20 | 45 A | SD2045B4V2XA000 | Horizontal Finned | 10501039501 | 4 |
| | | SD2045B4H2XA000 | Vertical Finned | 10501039401 | 4 |
| | | SD2045B4F2XA000 | Flat Plate | 10501039601 | 4 |
| | | SD2045B4A2XA000 | Active cooling* | 10501039701 | 4 |

* This version uses internal fan for cooling

# VARIABLE SPEED DRIVE

## DIMENSIONS

**Frame size 1**

| Model | A (Length of different Cooling type) (mm) | | | Weight (kg) | | |
|---|---|---|---|---|---|---|
| | Horizontal | Vertical | Flat plate | Horizontal | Vertical | Flat plate |
| SD2011A2 | 39.5 | 39.5 | 8 | 2.38 | 2.38 | 2.24 |
| SD2015A2 | 59 | 59 | 8 | 3.59 | 3.59 | 2.79 |

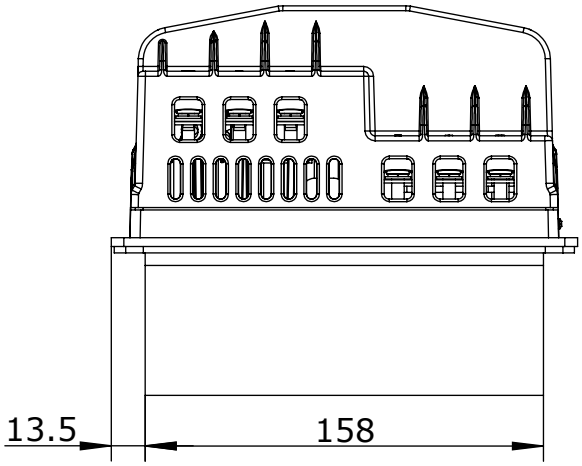


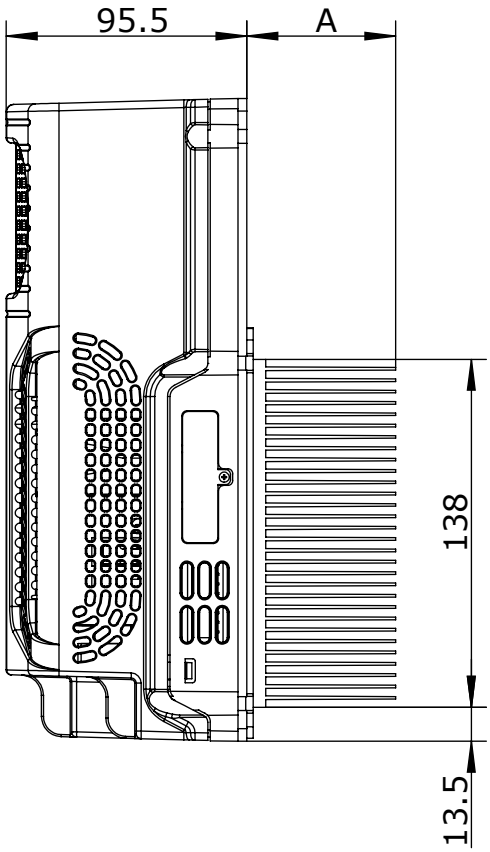


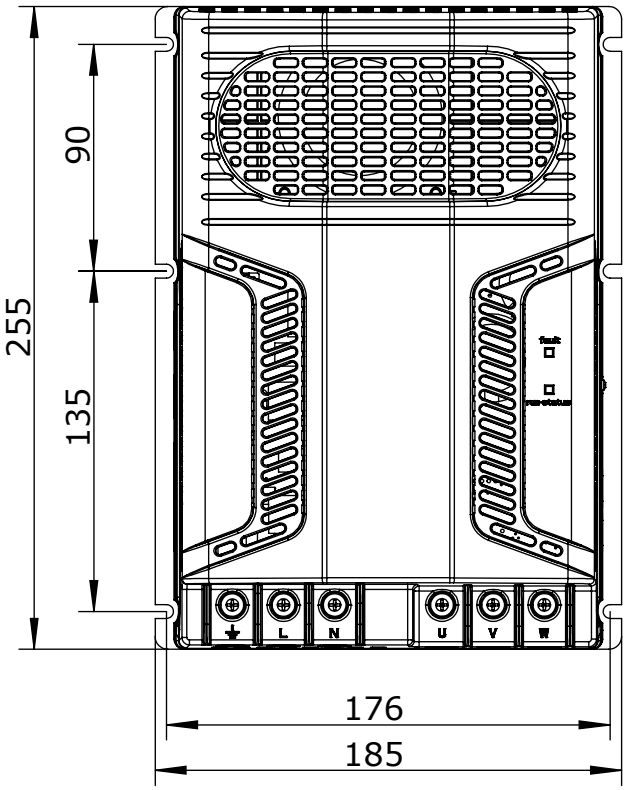

# VARIABLE SPEED DRIVE

**Frame size 2**

| Model | A (Length of different Cooling type) (mm) | | | Weight (kg) | | |
|---|---|---|---|---|---|---|
| | Horizontal | Vertical | Flat plate | Horizontal | Vertical | Flat plate |
| SD2020A2 | 59 | 59 | 8 | 3.95 | 3.95 | 2.95 |

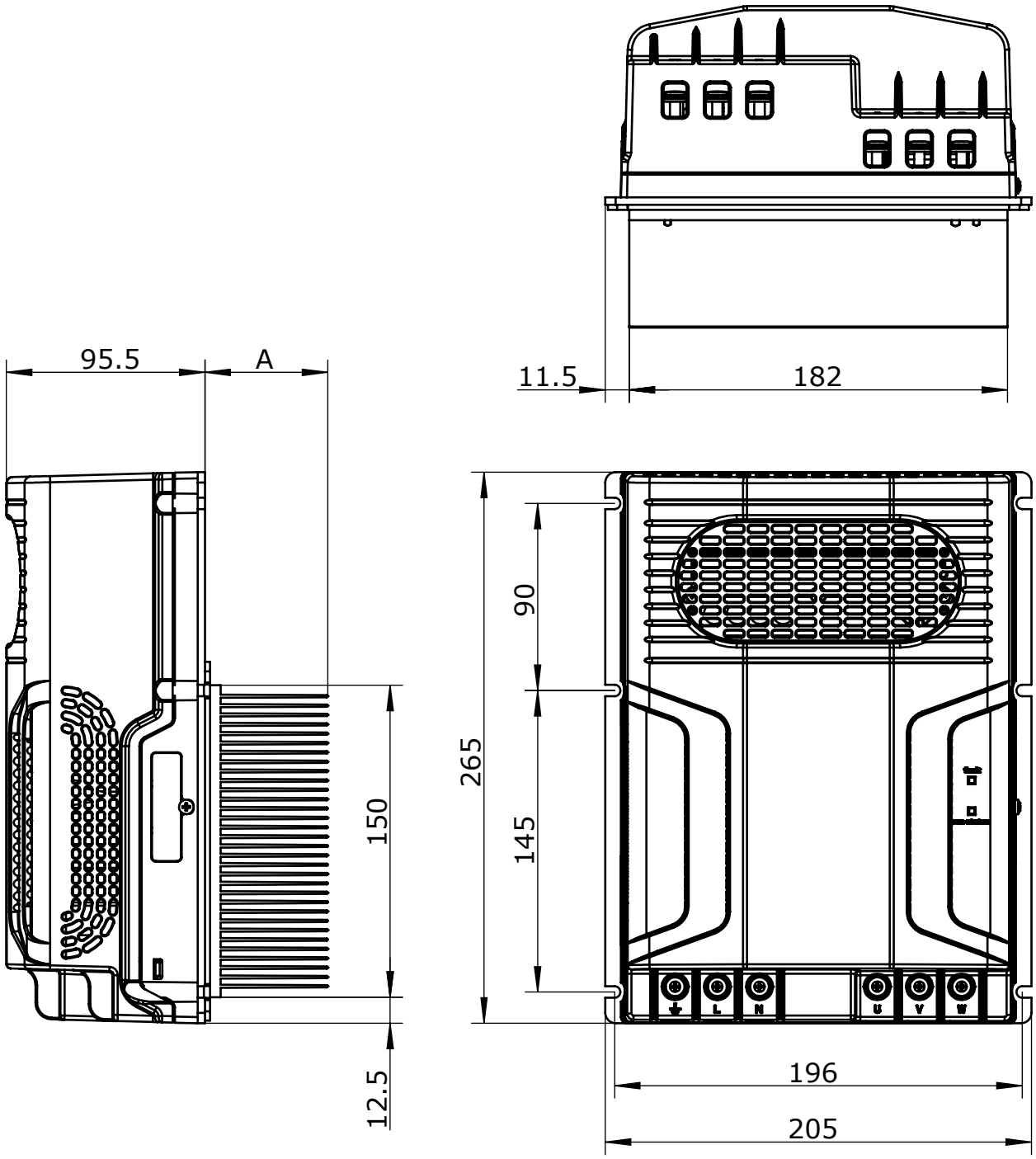

# VARIABLE SPEED DRIVE

**Frame size 3**

| Model | A (Length of different Cooling type) (mm) | | | Weight (kg) | | |
|---|---|---|---|---|---|---|
| | Horizontal | Vertical | Flat plate | Horizontal | Vertical | Flat plate |
| SD2015B4 | 39.5 | 39.5 | 8 | 3.1 | 3.1 | 2.4 |
| SD2020B4 | 59 | 59 | 8 | 3.84 | 3.84 | 2.61 |
| SD2025B4 | 59 | 59 | 8 | 4.46 | 4.46 | 2.98 |
| SD2032B4 | 69 | 69 | 8 | 4.14 | 4.14 | 3.13 |

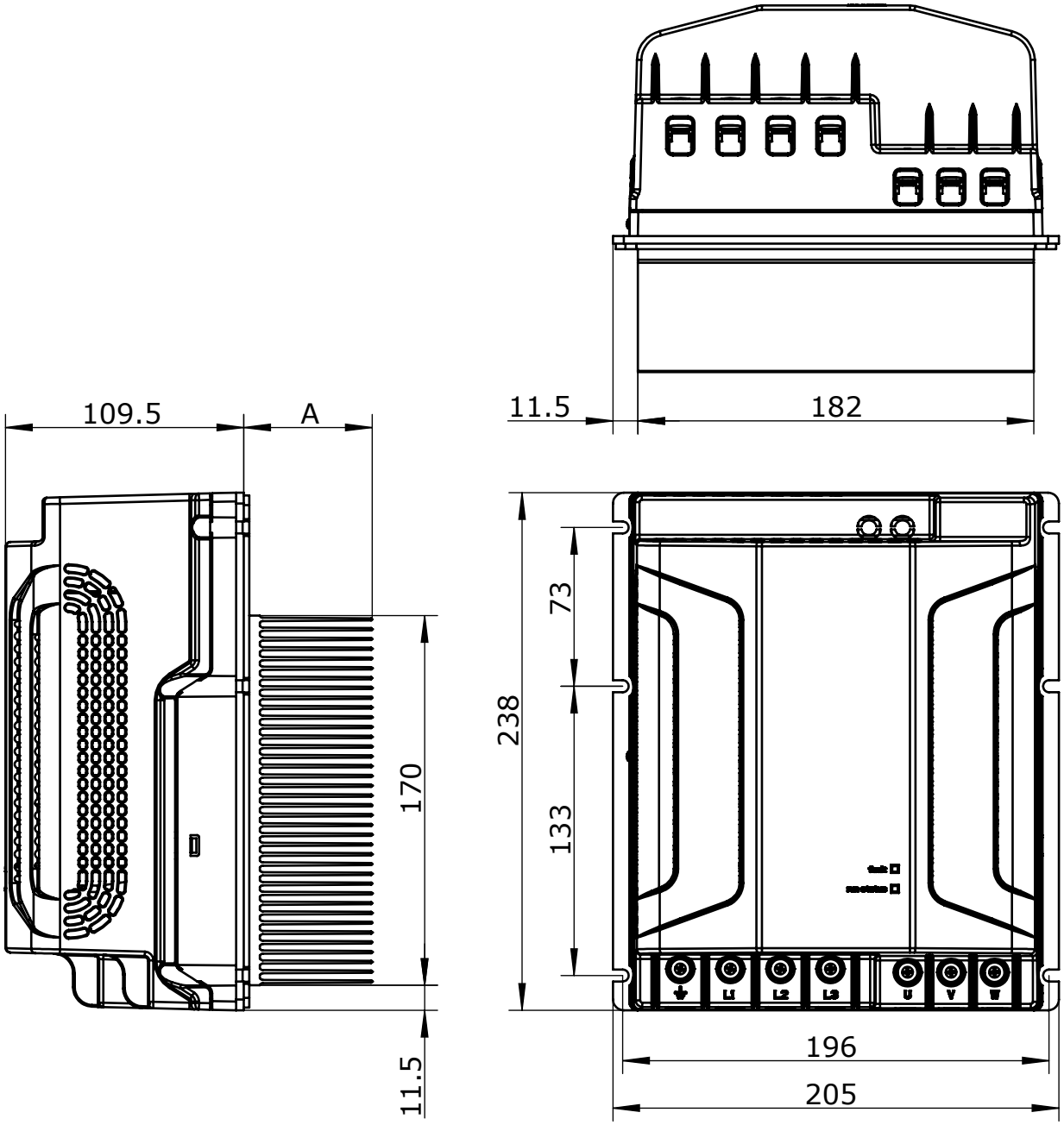

# VARIABLE SPEED DRIVE

**Frame size 4**

| Model | A (Length of different Cooling type) (mm) | | | | Weight (kg) | | | |
|---|---|---|---|---|---|---|---|---|
| | Active cooling | Horizontal | Vertical | Flat plate | Active cooling | Horizontal | Vertical | Flat plate |
| SD2037B4 | 84 | 70 | 70 | 11 | 7 | 5.6 | 5.6 | 4 |
| SD2045B4 | 84 | 80 | 80 | 11 | 7 | 5.6 | 5.6 | 4 |

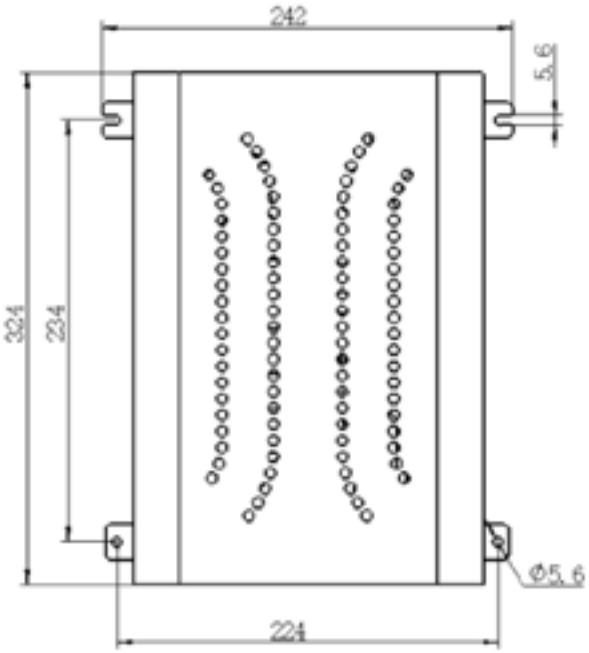


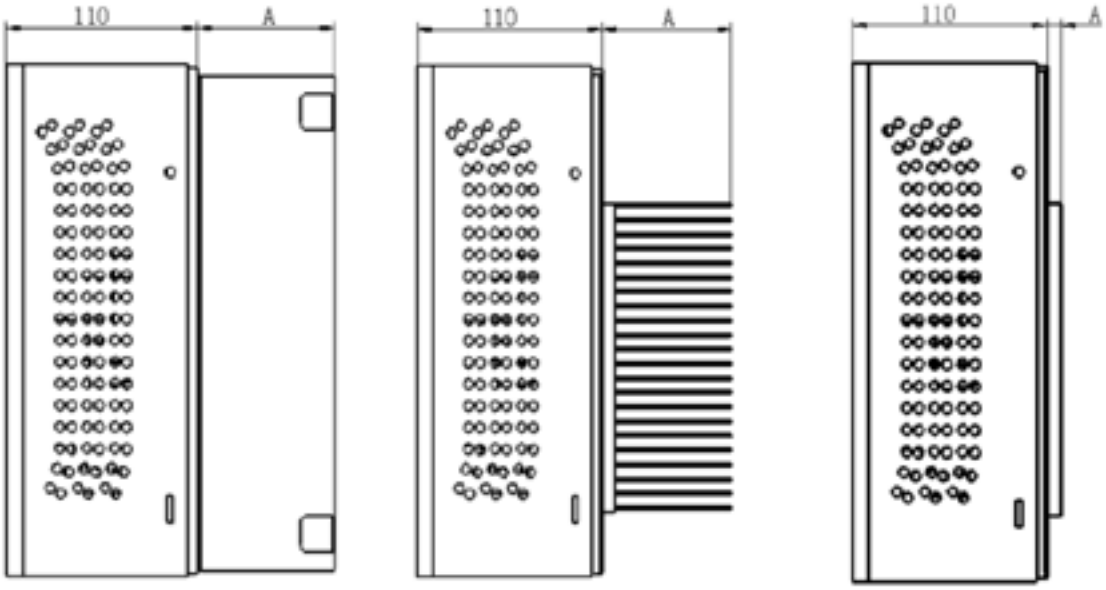


Active Air Cooling

Horizontal / Vertical

Flat plate

# VARIABLE SPEED DRIVE

## INSTALLATION DIAGRAM

**1ph - SD2011 / SD2015 / SD2020**

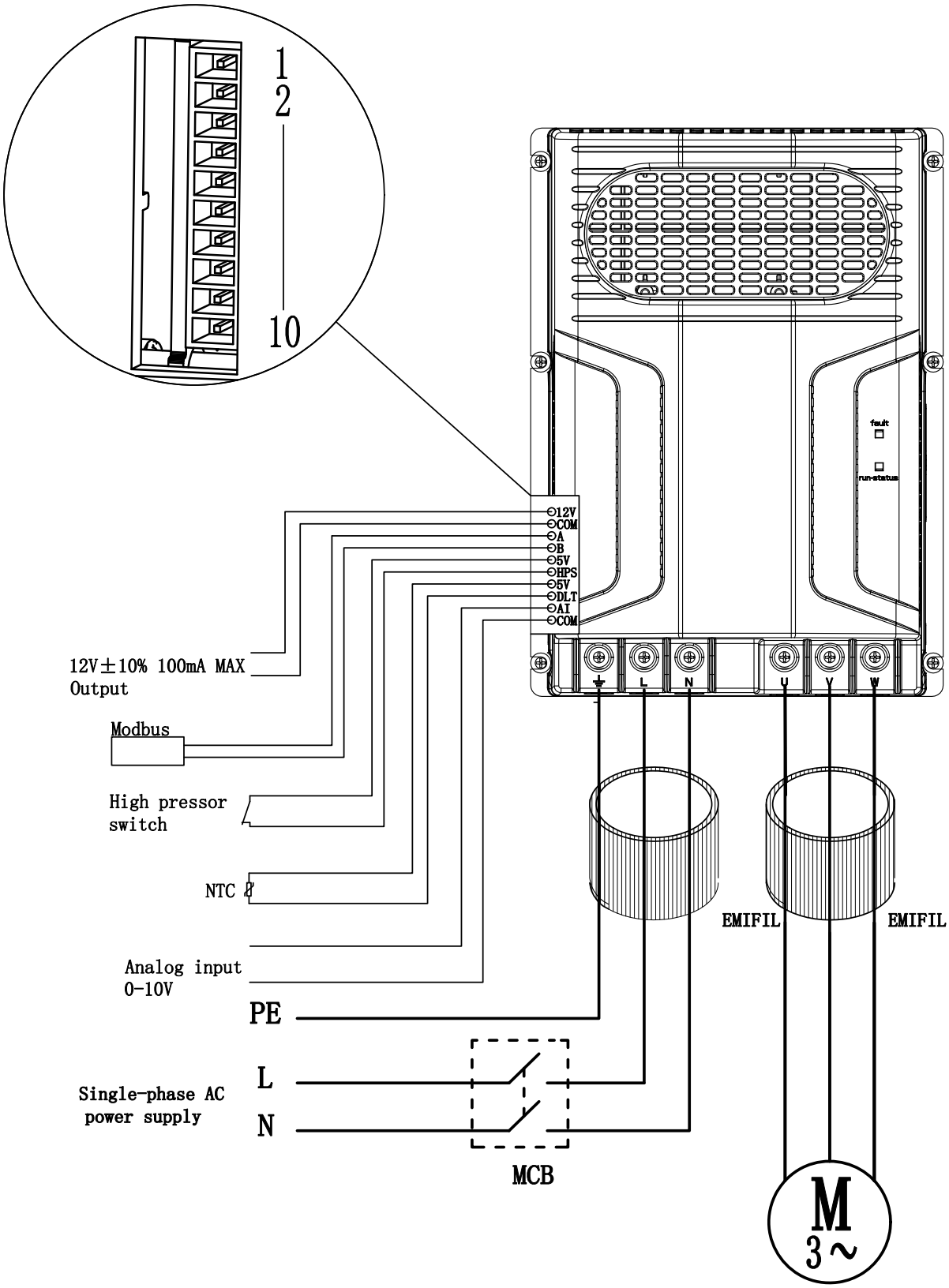

# VARIABLE SPEED DRIVE

## INSTALLATION DIAGRAM

**3ph - SD2015 / SD2020 / SD2025**

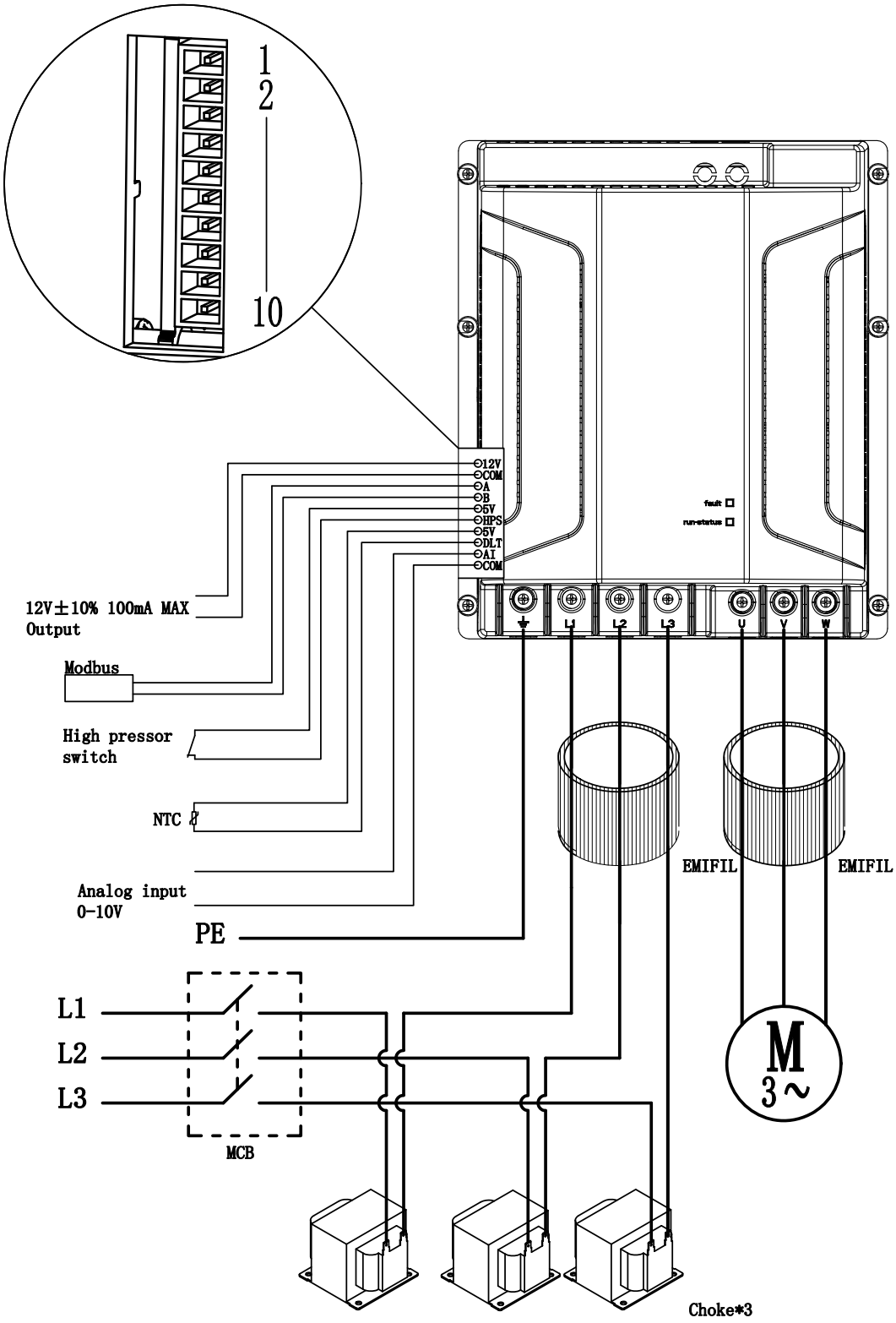

# VARIABLE SPEED DRIVE

**3ph – SD2032 / SD2037 / SD2045**

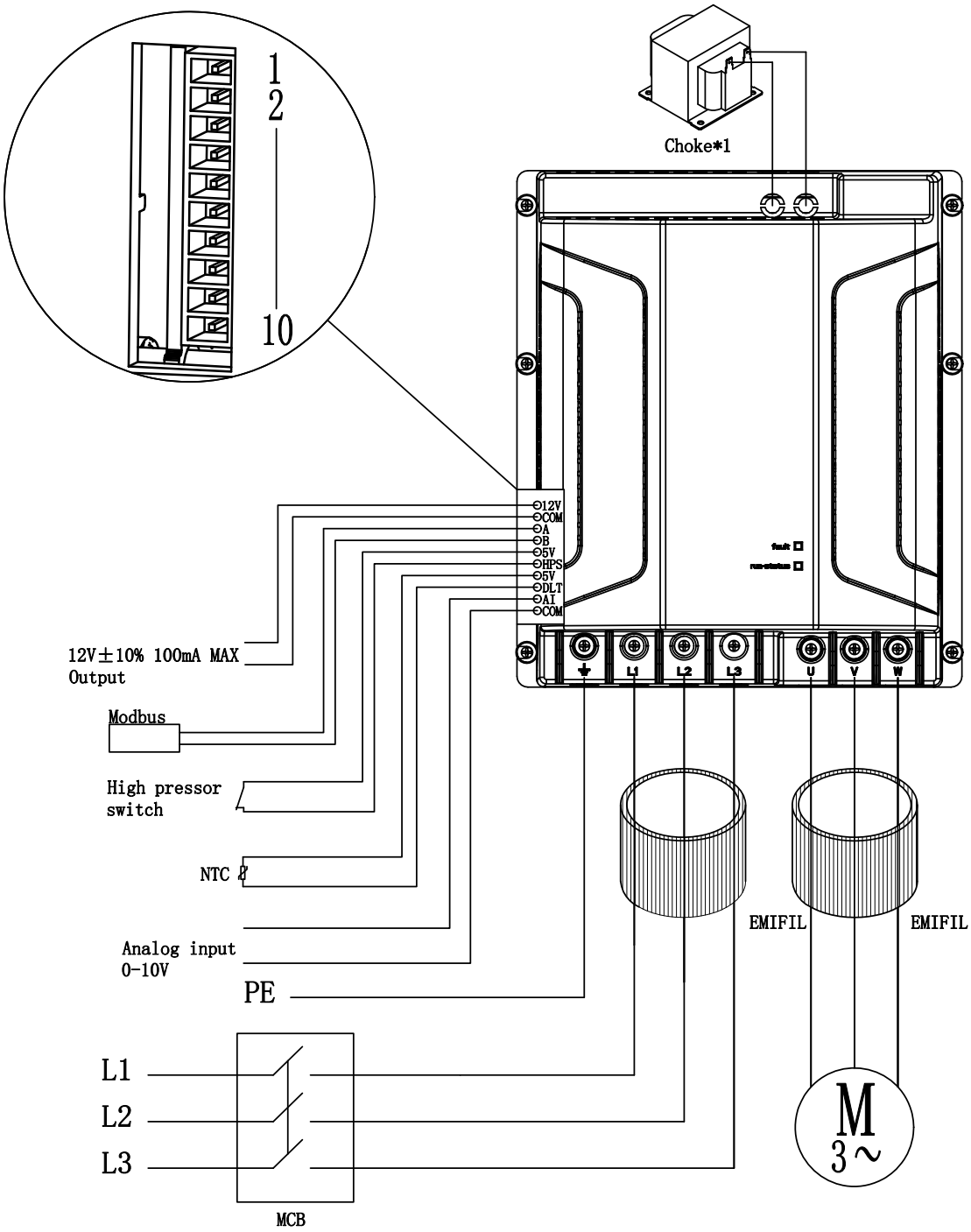

# VARIABLE SPEED DRIVE

## PRESSURE SWITCHES

| Pressure type | Reference | Electrical rating | Contact | Reset | Port fitting | Electrical connector |
|---|---|---|---|---|---|---|
| HP | MPS2AXXX | 240V / 1-4A | NO/NC | Automatic | "1/4 SAE, 1/4 solder, 6mm solder, 1/8 NPTF Male" | Lead wires, AMP connector, Automotive connector... |
| LP | MPS1AXXX | | | | | |

*Contact your sales representative for the pressures switch selection and best advice adapted to your application.*

## CHOKES

Three-phase models are supplied together with chokes to be externally connected to the drives.
Chokes for single phase version are embedded in the drive.

| SD2 drive | Type | Nb. | Choke Model | SANHUA U11 Code | Dimensions [ mm ] | | | | | | Weight (kg) |
|---|---|---|---|---|---|---|---|---|---|---|---|
| | | | | | A | B | C | D | E | F | |
| SD2015B4 | 3PH 3.8KW | 3 | LE76-0825-XT | 10530500401 | 64 | 64 | 78 | 76,2 | 65 | 5,2 | 1,5 |
| SD2020B4 | 3PH 5.0KW | | LE105-1325-XTA | 10530500501 | 88 | 90 | 105 | 110 | 89 | 6 | 3,9 |
| SD2025B4 | 3PH 8.0KW | | LE85.8-2503B-XTA | 10530500601 | 64 | 64 | 76,2 | 78 | 73 | 4 | 2 |
| SD2032B4 | 3PH 11.5KW | 1 | R3515 | 10521007201 | 79 | 88 | 93,2 | 112,5 | 73,5 | 5,8*16 | 1,86 |
| SD2037B4 | 3PH 15KW | | R5004 | 23000002001 | 103 | 104 | 133 | 135 | 97 | 6*15 | 6,0 |
| SD2045B4 | 3PH 18.5KW | | R6035 | 23000002101 | 103 | 104 | 133 | 135 | 113 | 6*15 | 6,3 |

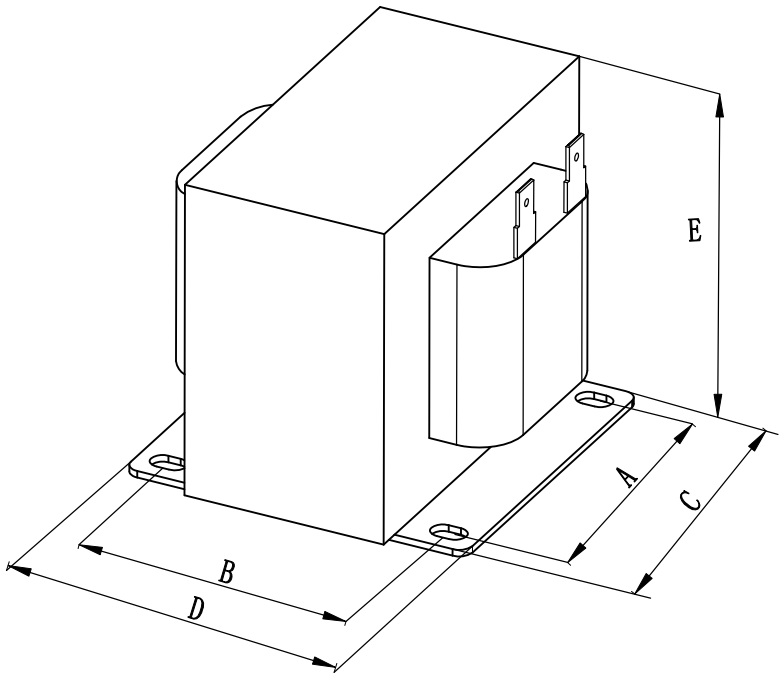


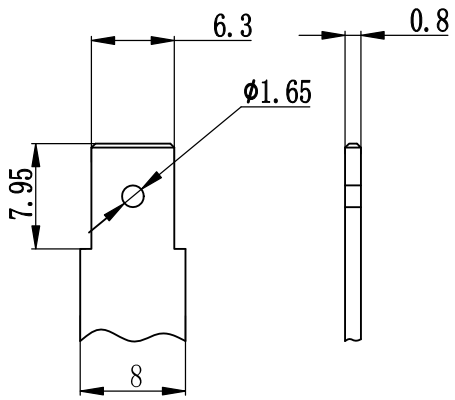

***YCQB*** *SERIES*

# PRESSURE SENSORS YCQB

Pressure sensors are widely used in Air Conditioning, Refrigeration and Heat Pump system. Using a 5V excitation input these sensors provide a 0.5-3.5 V or 0.5-4.5 V ratiometric signal output proportional to the pressure of the medium. This device requires no end user amplification. Pressure sensors permit to control and guarantee the system working under safe and stability condition.

## FEATURES

- OVERALL FEATURES: APPLIED HIGH PERFORMANCE DIGITAL CIRCUIT WHICH HAS GOOD LINEAR, SMALL TEMPERATURE EXCURSION AND HIGH LEVEL OF ACCURACY OVER WIDE OPERATING RANGE;
- SMALL SIZE AND SIMPLE INSTALLATION;
- MODELS AVAILABLE WITH LEAD WIRE DIRECT CONNECTOR OR WITH PACKARD AND MOLEX SOCKET CONNECTIONS
- STABILITY: APPLIED SUPERIOR PRESSURE CORE, GOOD STABILITY UNDER STRICT PROCESS CONTROL;
- DIVERSIFICATION: DIFFERENT PRESSURE RANGES AND DIFFERENT LEVEL OF ACCURACY

### GENERAL SPECIFICATIONS

- Applicable for HFC / HFO / flammables refrigerants and $CO_2$
- Relative humidity: 0 to 95% RH
- Installation position: preferably with vertical axis and sensor upwards
- Certifications: UL/CSA and declaration according to EMC directive

### ELECTRICAL SPECIFICATIONS

- Supply voltage: 5V ± 0.25V DC
- Current consumption: Max. 10 mA
- Response time: <10 ms
- Insulation resistance: Min. 100 MΩ
- Load resistance: Min. 10 kΩ
- Protection class: IP66/IP67

# PRESSURE SENSOR

## MODEL DESIGNATION

| | | | | | |
|---|---|---|---|---|---|
| **YCQ** | B | 02 | L | xxxx | YCQ = Pressure Transmitter |
| YCQ | **B** | 02 | L | xxxx | B = Voltage output / C = Current Output |
| YCQ | B | **02** | L | xxxx | Pressure range<br>01 : between 0 and 10 bar<br>02 : between 0 and 20 bar<br>03 : between 0 and 30 bar<br>04 : between 0 and 40 bar<br>05 : between 0 and 50 bar |
| YCQ | B | 02 | **L** | xxxx | L = Thread / H= Solder |
| YCQ | B | 02 | L | **xxxx** | Digits for additional information |

## GENERAL CHARACTERISTICS

*YCQB with 0.5 to 3.5V output signal*

| Model Name | Output signal = **0.5 to 3.5V** (compatible with Sanhua controller = SEC) | | | | | | |
|---|---|---|---|---|---|---|---|
| | Part Number | Connection type | Pressure range | Max Working pressure | Electrical connection | Accuracy | Medium Temp. |
| | | | [bar] | [bar] | Type | % | °C |
| YCQB02H01 | 10185004702 | Solder ¼" | 0-20 | 52,5 | 2m wires +XHP | ±2% FS | -30 / 120 |
| YCQB02H01-01 | 10185001502 | | 0-20 | 52,5 | 2m wires +XHP | ±0,8% FS | -40 / 120 |
| YCQB02H18-1 | 10185015402 | | 0-20 | 52,5 | 4.9m wires +XHP | ±0,8% FS | -40 / 120 |
| YCQB02H165 | 10185087602 | | -1-20 | 52.5 | Packard | ±0,8% FS | -40 / 120 |
| YCQB02H166 | 10185087002 | Solder 6mm | -1-20 | 52.5 | Packard | ±0,8% FS | -40 / 120 |
| YCQB03H05 | 10185046602 | Solder ¼" | 0-30 | 75 | 2m wires +XHP | ±0,8% FS | -40 / 120 |
| YCQB05H01 | 10185004802 | | 0-50 | 75 | 2m wires +XHP | ±2% FS | -30 / 120 |
| YCQB02L12-1 | 10185015502 | Flare 7/16-20UNF-2B | 0-20 | 52,5 | 2m wires +XHP | ±0,8% FS | -40 / 120 |
| YCQB02L28-1 | 10185015602 | | 0-20 | 52,5 | 4.9m wires +XHP | ±0,8% FS | -40 / 120 |
| YCQB02L171 | 10185060402 | | -1-20 | 52,5 | Packard | ±0,8% FS | -40 / 120 |
| YCQB03L156 | 10185046302 | | 0-30 | 75 | Packard | ±0,8% FS | -40 / 120 |
| YCQB06L01 | 10185067202 | | 0-60 | 90 | Packard | ±1.5% FS | -40 / 120 |
| YCQB09L02 | 10185044102 | G1/4 | 0-90 | 225 | 2m wires +XHP | ±2% FS | -30/+85 |

# PRESSURE SENSOR

*YCQB with 0.5 to 4.5V output signal*

| Output signal = **0.5 to 4.5V** | | | | | | | |
|---|---|---|---|---|---|---|---|
| **Model Name** | **Part Number** | **Connection type** | **Pressure range** | **Max Working pressure** | **Electrical connection** | **Accuracy** | **Medium Temp.** |
| | | | **[bar]** | **[bar]** | **Type** | **%** | **°C** |
| YCQB02H50 | 10185004502 | Solder ¼" | 0-13.8 | 52,5 | Packard | ±2% FS | -30 / 120 |
| YCQB02H153 | 10185021802 | | 0-17.3 | 52.5 | Packard | ±2% FS | -30 / 80 |
| YCQB04H50 | 10185004602 | | 0-34.5 | 75 | Packard | ±2% FS | -30 / 120 |
| YCQB03H06 | 10185046502 | | 0-30 | 75 | 2m wires +XHP | ±0,8% FS | -40 / 120 |
| YCQB05H11 | 10185046102 | | 0-50 | 75 | 2m wires +XHP | ±2% FS | -40 / 150 |
| YCQB05H154 | 10185109102 | | 0-50 | 75 | Packard | ±2% FS | -30 / 120 |
| YCQB02L01 | 10185004902 | Flare 7/16-20UNF-2B | 0-20 | 52,5 | 2m wires +XHP | ±2% FS | -30 / 120 |
| YCQB02L01-01 | 10185001402 | | 0-20 | 52,5 | 2m wires +XHP | ±0,8% FS | -40 / 120 |
| YCQB03L18 | 10185046402 | | 0-30 | 75 | 2m wires +XHP | ±0,8% FS | -40 / 120 |
| YCQB05L01 | 10185007002 | | 0-46 | 75 | 2m wires +XHP | ±2% FS | -30 / 120 |
| YCQB05L63 | 10185046002 | | 0-50 | 75 | 2m wires +XHP | ±2% FS | -40 / 150 |
| YCQB01L50 | 10185015702 | | -1 -9.3 | 52,5 | Packard | ±2% FS | -30 / 130 |
| YCQB02L50 | 10185004002 | | 0-13.8 | 52,5 | Packard | ±1% FS | -30 / 120 |
| YCQB02L51 | 10185014102 | | 0-17.2 | 52,5 | Packard | ±1% FS | -30 / 120 |
| YCQB02L154 | 10185028102 | | 0-20 | 52.5 | Packard | ±2% FS | -30 / 120 |
| YCQB03L157 | 10185046202 | | 0-30 | 75 | Packard | ±0,8% FS | -40 / 120 |
| YCQB04L50 | 10185004202 | | 0-34.5 | 52,5 | Packard | ±1% FS | -30 / 120 |
| YCQB05L50 | 10185004302 | | 0-46 | 75 | Packard | ±1% FS | -30 / 120 |
| YCQB05L53 | 10185013402 | | 0-45 | 75 | Packard | ±2% FS | -30 / 130 |
| YCQB05L161 | 10185045902 | | 0-50 | 75 | Packard | ±2% FS | -40 / 150 |
| YCQB02L100 | 10185009102 | | 0-20 | 52,5 | Molex | ±2% FS | -30 / 120 |
| YCQB05L100 | 10185009202 | | 0-46 | 75 | Molex | ±1% FS | -30 / 120 |

*YCQB for High pressure use - G ¼*

| **Model Name** | **U11** | **Connection type** | **Pressure range** | **Max Working pressure** | **Electrical connection** | **Cable length** | **Output signal** | **Medium Temp.** |
|---|---|---|---|---|---|---|---|---|
| | | | **[bar]** | **[bar]** | **Type** | **[m]** | **[VDC]** | **°C** |
| YCQB06L01* | 10185067202 | Flare 7/16-20UNF-2B | 0-60 | 180 | Packard | 0 | 0.5 to 3.5 | -40/+80 |
| YCQB09L02* | 10185044102 | G 1/4 | 0-90 | 180 | XHP | 2 | 0.5 to 3.5 | -30/+85 |
| YCQB15L01 | 10185030302 | G 1/4 | 0-150 | 225 | XHP | 2 | 0.5 to 4.5 | -30/+85 |

* suitable with Sanhua superheat controller SEC61.

# PRESSURE SENSOR

*YCQB for water use*

Suitable with pure water and water + glycol till 50%.

| Output signal = 0.5 to 4.5V | | | | | | | |
|---|---|---|---|---|---|---|---|
| Model Name | Part Number | Connection type | Pressure range | Max Working pressure | Electrical connection | Cable length | Medium Temp. |
| | | | [bar] | [bar] | Type | [m] | °C |
| YCQB01L503 | 10185042702 | Flare 7/16-20UNF-2B | 0-10 | 52.5 | XHP | 2 | -30/+100 |

**Note:** 1) Signal span: VFS=FS (Full Scale) = VA(pr) - VA0

2) Accuracy measured within the temperature ranges shown in Table 1:
Included Nonlinearity (L) and pressure hysteresis. The Nonlinearity is the deviation of the real sensor characteristic VA = f(p) from the ideal straight line. It can be approximated by a polynomial of second order, with the maximum at px = pr / 2.
The equation to calculate the nonlinearity is: L = (VA(px) – VA0) / (VA(pr) – VA0) – px / pr

3) Response Time: delay between a pressure change (10 to 90% pr) and the corresponding signal output change (10 to 90% FS)

4) Insulation Resistance measured with rated voltage: 500 VDC

For other connection types (M12, M16...) please contact your Sanhua local representative.

***YCQC*** *SERIES*

# PRESSURE SENSOR YCQC

Pressure sensors are widely used in Air Conditioning, Refrigeration and Heat Pump system. YCQC pressure sensor uses a DC 10-30V excitation input to provide a 4-20 mA signal output proportional to the pressure of the medium. This device requires no end user amplification. Pressure sensors permit to control and guarantee the system working under safe and stability condition.

## FEATURES

- OVERALL FEATURES: APPLIED HIGH PERFORMANCE DIGITAL CIRCUIT WHICH HAS GOOD LINEAR, SMALL TEMPERATURE EXCURSION AND HIGH LEVEL OF ACCURACY OVER WIDE OPERATING RANGE
- SMALL SIZE AND SIMPLE INSTALLATION; MODELS AVAILABLE WITH PACKARD CONNECTOR OR WIRES
- STABILITY: APPLIED SUPERIOR PRESSURE CORE, GOOD STABILITY UNDER STRICT PROCESS CONTROL

### GENERAL SPECIFICATIONS

- Applicable for HFC / HFO / flammables refrigerants and $CO_2$
- Relative humidity: 0 to 95% RH
- Installation position: preferably with vertical axis and sensor upwards
- Certifications: declarations according to EMC & PED directives

### ELECTRICAL SPECIFICATIONS

- Supply voltage: from 10V to 30V DC
- Rated output signal: from 4 to 20 mA
- Voltage dependency: < 0,05% FS/10 V
- Current Limitation (linear output signal up to 1.5 x rated range): 28 mA
- Signal Span ($V_{FS}$): 16 V
- Insulation resistance: Min. 100 MΩ
- Protection class: IP65/IP66

# PRESSURE SENSOR

## GENERAL CHARACTERISTICS

*YCQC with 4-20mA signal output*

| Model Name | Output signal = 4- 20mA | | | | | | |
|---|---|---|---|---|---|---|---|
| | Part Number | Connection type | Pressure range | Max Working pressure | Electrical connection | Accuracy | Medium Temp. |
| | | | [bar] | [bar] | Type | % | °C |
| YCQC03L04 | 10185011002 | Flare 7/16-20UNF-2B | 0-30 | 75 | Hirschmann | ±0,8% FS | 40 / 80 |
| YCQC01L13 | 10185015202 | | -0.5-7 | 52.5 | Packard | ±0,8% FS | -40 / 80 |
| YCQC01L501 | 10185036002 | | -0.8-7 | 52.5 | Packard | ±0,8% FS | -40 / 80 |
| YCQC02L18 | 10185017102 | | -1-12 | 52.5 | Packard | ±0,8% FS | -40 / 80 |
| YCQC02L24 | 10185023002 | | 0-18 | 52.5 | Packard | ±0,8% FS | -40 / 80 |
| YCQC02L107 | 10185056402 | | -1-20 | 52.5 | Packard | ±0,8% FS | -40 / 80 |
| YCQC03L05 | 10185009302 | | 0-30 | 75 | Packard | ±0,5% FS | -40 / 80 |
| YCQC03L06 1 | 10185009402 | Flare 7/16-20UNF-2A | 0-30 | 75 | Packard | ±0,5% FS | -40 / 80 |
| YCQC03L11 | 10185014402 | Flare 7/16-20UNF-2B | 0-30 | 75 | Packard | ±0,8% FS | -40 / 80 |
| YCQC05L09 | 10185015302 | | 0-44.8 | 75 | Packard | ±0,8% FS | -40 / 80 |
| YCQC05L25 | 10185047002 | | 0-50 | 75 | Packard | ±0,8% FS | -40/150 |
| YCQC01H101 | 10185035902 | Solder ¼” | 0-10 | 52.5 | Packard | ±0,8% FS | -40 / 80 |
| YCQC02H106 | 10185102302 | Solder 6 mm | -1-12 | 52.5 | Packard | ±1% FS | -40 / 80 |
| YCQC03H101 | 10185028201 | Solder ¼” | 0-30 | 75 | Packard | ±0,8% FS | -40 / 80 |

# PRESSURE SENSOR

*YCQC with G 3/8A connector*

| Output signal = **4- 20mA** | | | | | | |
|---|---|---|---|---|---|---|
| **Model Name** | **Part Number** | **Pressure range** | **Max Working pressure** | **Electrical connection** | **Accuracy** | **Medium Temp.** |
| | | **[bar]** | **[bar]** | **Type** | **%** | **°C** |
| YCQC02L04 | 10185009902 | -1 - 12 | 52.5 | Hirschmann | ±0,8% FS | -40 / 80 |
| YCQC02L05 | 10185009802 | -1 - 20 | 52.5 | Hirschmann | ±0,8% FS | -40 / 80 |

*YCQC for High pressure use*

| Output signal = **4- 20mA** | | | | | | |
|---|---|---|---|---|---|---|
| **Model Name** | **Part Number** | **Connection type** | **Pressure range** | **Max Working pressure** | **Electrical connection** | **Medium Temp.** |
| | | | **[bar]** | **[bar]** | **Type** | **°C** |
| YCQC15L02 | 10185042302 | G 1/4 | 0-150 | 225 | Packard +10 cm | -20 / 100 |
| YCQC09L02 | 10185042402 | Flare | 0-90 | 135 | Packard + 10 cm | -20 / 100 |
| YCQC06L101 | 10185088202 | Flare-Female | 0-60 | 90 | Packard | -40 / 80 |
| YCQC06L102 | 10185088302 | Flare-Male | 0-60 | 90 | Packard | -40 / 80 |
| YCQC06L103 | 10185088402 | Flare-Female | 0-60 | 90 | M12 | -40 / 80 |
| YCQC06L104 | 10185088502 | Flare-Male | 0-60 | 90 | M12 | -40 / 80 |
| YCQC06H101 | 10185087702 | Solder ¼” | 0-60 | 90 | Packard | -40 / 80 |
| YCQC06H102 | 10185087902 | Solder 6 mm | 0-60 | 90 | Packard | -40 / 80 |
| YCQC06H103 | 10185088002 | Solder ¼” | 0-60 | 90 | M12 | -40 / 80 |
| YCQC06H104 | 10185088102 | Solder 6 mm | 0-60 | 90 | M12 | -40 / 80 |
| YCQC15H04 | 10185064601 | Solder 6 mm | 0-150 | 225 | Packard | -40 / 80 |

# PRESSURE SENSOR

*YCQC for water use*

Suitable with pure water and water + glycol till 50%.

| Output signal = **4- 20mA** | | | | | | |
|---|---|---|---|---|---|---|
| **Model Name** | **Part Number** | **Connection type** | **Pressure range** | **Max Working pressure** | **Electrical connection** | **Medium Temp.** |
| | | | **[bar]** | **[bar]** | **Type** | **°C** |
| YCQC01L501 | 10185036002 | Flare 7/16-20UNF-2B | -0.8 -7 | 52.5 | Packard | -40/80 |

**Note:** 1) Signal span: $V_{FS}$=FS (Full Scale) = $V_A(p_r)$ - $V_{A0}$

2) Insulation Resistance measured with rated voltage: 500 VDC

## DIMENSIONS

Please refer to the 2D drawing or contact your local representative.

## OPERATING TEMPERATURES

**YCQB or YCQC**
**Flare and Brazed**

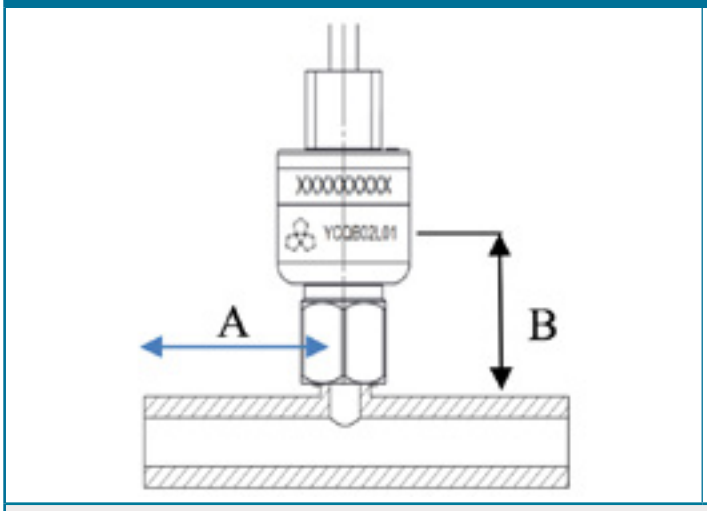


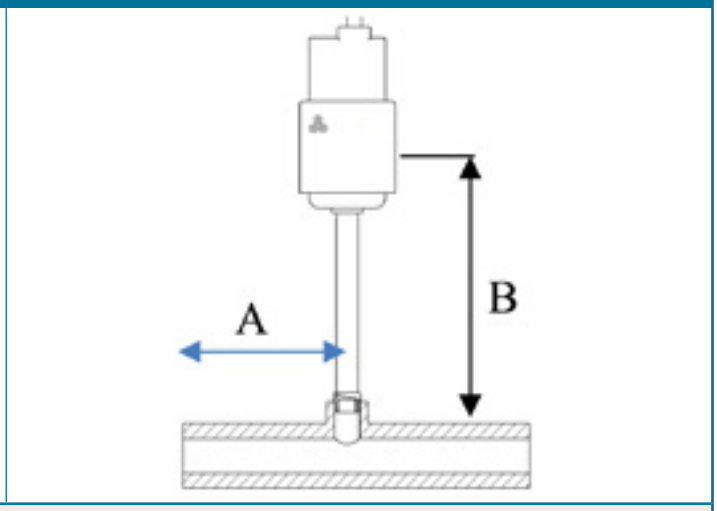


| Maxi Medium Temperature | Ambient Temperature | Distance "A" | Distance "B" Flare | Distance "B" Brazed |
|---|---|---|---|---|
| [°C] | [°C] | [mm] | [mm] | [mm] |
| 150 | 60 | >30 | 40 | 70 |

# PRESSURE SENSOR

## ACCESSORIES

Packard Cables IP **67** with 3 wires

| Model Name | Part Number | Connector Type | Total Cable Length | Terminal |
|---|---|---|---|---|
| YCQB02-013251 | 20185108201 | Packard | 2000 mm | XHP-3 |
| YCQB02-013252 | 20185108101 | Packard | 5000 mm | XHP-3 |
| YCQB02-013253 | 20185108001 | Packard | 9000 mm | XHP-3 |

**Note:** Can be used also with YCQC pressure transmitter models

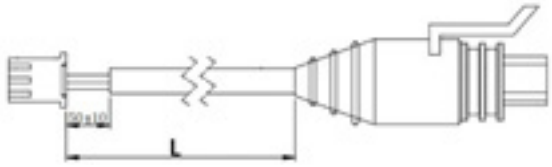


Packard Cables IP **67** with 3 wires

| Model Name | Part Number | Connector Type | Total Cable Length | Terminal |
|---|---|---|---|---|
| YCQB02-013050 | 20185034002 | Packard | 1500 mm | Lead Wires |
| YCQB02-013056 | 20185034102 | Packard | 5000 mm | Lead Wires |
| YCQB02-013084 | 20185044902 | Packard | 8000 mm | Lead Wires |

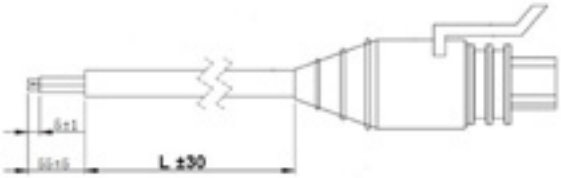


Packard Cables IP **67** + XHP connector with 2 wires

| Model Name | Part Number | Connector Type | Total Cable Length | Terminal |
|---|---|---|---|---|
| YCQC02-013037 | 20185051102 | Packard | 2000 mm | XHP-3 |
| YCQC02-013038 | 20185051202 | Packard | 5000 mm | XHP-3 |
| YCQC02-013039 | 20185051302 | Packard | 9000 mm | XHP-3 |

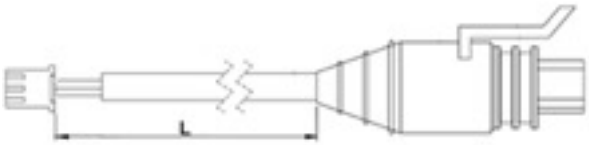

# PRESSURE SENSOR

Packard Cables IP **67** with 2 wires

| Model Name | Part Number | Connector Type | Total Cable Length | Terminal |
|---|---|---|---|---|
| YCQC02-013034 | 20185046602 | Packard | 2000 mm | Lead Wires |
| YCQC02-013036 | 20185051002 | Packard | 4000 mm | Lead Wires |

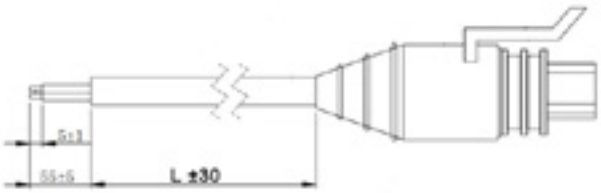


M12 cable with 2 wires

| Model Name | Part Number | Connector Type | Total Cable Length | Terminal |
|---|---|---|---|---|
| YCQC02-013080 | 20185040302 | M12 | 7000 mm | Wires with end cap Pins 1-4 |
| YCQC02-013081 | 20185069302 | M12 | 3000 mm | Wires with end cap Pins 1-3 |

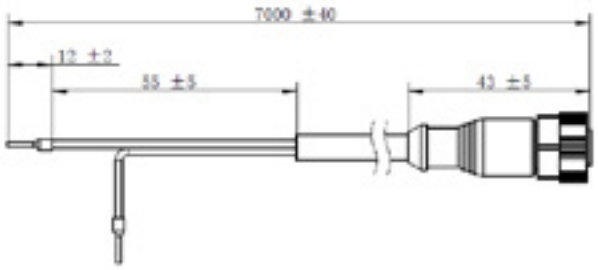

## ***PSV01/50/60/15/16*** *SERIES*

# PRESSURE CONTROLS

Pressure controls can be used in refrigeration and air conditioning systems to protect the systems from extremely low suction pressure or extremely high discharge pressure. The pressure controls are also used to start or stop the refrigeration compressors and air-cooled condenser fans, to regulate other components in the systems which require pressure control function.

## FEATURES

- HIGH PRECISION AND EXCELLENT STABILITY
- LONG LIFE TIME WITH BOTH EXCELLENT ELECTRIC AND MECHANICAL RELIABILITY
- SPDT SWITCH TO ENSURE GOOD CONTACT AND DISCONNECT CONVERSION WITH FAST REACTIONS
- VARIOUS PRESSURE CONTROLLING RANGES
- INSTALLATION PLATE FOR OPTION

### GENERAL SPECIFICATION

- Refrigerant: HCFC, HFC, HFO (R134a, R404A/R507, R407C, R22, R407A/F, R448A/449A, R452A, R513A, R450A, R410A); approved A2L[1] refrigerants: R1234ze, R1234yz, R1234yf, R32, R452B, R454A, R454B, R454C, R455A
- Medium Temperature: -40°C /+120°C
- Ambient Temperature: -30°C/+65°C
- Relative Humidity: 0-95% RH
- Max. Working Pressure: HP: 3.5MPa/4.5MPa; LP: 1.65MPa
- Enclosure: IP30 (IP44 as option)
- Certification:
  - CE acc. LVD 2014/35/EU (EN60730-1:2011 EN60730-2-6:2016)
  - CE acc. PED 2014/68/EU, category IV (EN 12263)
  - UL acc. UL508 (E480941)

| Contact load | AC1 | AC3 | AC15 | DC |
|---|---|---|---|---|
| Rated Voltage (V) | 400 | 400 | 400 | 24 |
| Rated Current (A) | 16 | 16 | 10 | 8 |

1) Approved electrical load for selected A2L refrigerants

| Voltage | Current | Power factor | Frequency |
|---|---|---|---|
| 250 V AC | ≤ 4 A | cos φ ≥ 0,4 | 50/60 Hz |
| 250 V AC | ≤ 6 A | cos φ ≥ 0,594 | 50/60 Hz |
| 250 V AC | ≤ 16 A | cos φ ≥ 0,78 | 50/60 Hz |

# PRESSURE CONTROLS

## MODEL DESIGNATION

| Position Number | Model Designation Legend | |
|---|---|---|
| 1 | **Type** | **Description** |
| | PSV | Pressure control |
| 2 | **Pressure regulating range** | **Description** |
| | 01 | LP: -0.5~7 bar(g) |
| | 50 | HP: 6~32 bar(g) |
| | 60 | HP: 8~42 bar(g) |
| | 15 | Dual (LP): -0.5~7 bar(g) / Dual (HP): 6~32 bar(g) |
| | 16 | Dual (LP): -0.5~7 bar(g) / Dual (HP): 8~42 bar(g) |
| 3 | **Reset Mode** | **Description** |
| | A | **A**utomatic reset |
| | M | **M**anual reset |
| | AA | **A**uto LP/ **A**uto HP |
| | AM/MA/MM/MC/CA/CM/CC | …… |
| 4 | **Connection type** | **Description** |
| | L | Flare |
| | H | Solder |
| | M | Capillary |
| 5 | **Product design (type)** | **Description** |
| | S | Standard Model - IP30 |
| | F | Standard Model - IP44 |
| | C | Customized Model |
| 6 | **Serial number, Certification type** | **Description** |
| | 0X (01/03/05/…..); X = odd | PED IV Certified, HP Double bellow. Inch or unified Inch & Metric |
| | 0X (02/04/06/…..); X = even | PED IV Certified, HP Double bellow. Metric only |
| | 5X (51/53/55...); X = odd | Ordinary Model, HP Single bellow. Inch or unified Inch & Metric |
| | 5X (52/54/56...); X = even | Ordinary Model, HP Single bellow. Metric only |

## MODEL DESIGNATION EXAMPLE

| Position Number | | | | | | | Model designation example (according above legend) |
|---|---|---|---|---|---|---|---|
| 1 | 2 | 3 | 4 | - | 5 | 6 | |
| **PSV** | 15 | AA | L | - | S | 01 | Pressure control |
| PSV | **15** | AA | L | - | S | 01 | Dual: LP: -0.5~7 bar(g) / HP: 6~32 bar(g) |
| PSV | 15 | **AA** | L | - | S | 01 | Auto reset HP, Auto reset LP |
| PSV | 15 | AA | **L** | - | S | 01 | Flare connection |
| PSV | 15 | AA | L | **-** | **S** | 01 | Standard Model |
| PSV | 15 | AA | L | - | S | **01** | PED IV Certified, HP Double bellows |

# PRESSURE CONTROLS

## SELECTION AND ORDERING



| PSV01, PSV50, PSV60, PSV15, PSV60 Flare Connection | | | | | | | | | | |
|---|---|---|---|---|---|---|---|---|---|---|
| Pressure | Type | Low Pressure (LP) | | High Pressure (HP) | | Reset | | PED 2014 68/EU EN 12263 Certified[1)] | Ordering Code | |
| | | Range | Differential Pressure ΔP | Range | Differential Pressure ΔP | | | | Flare Connection 7/16-20UNF (1/4in. & 6mm) | |
| | | [bar] | [bar] | [bar] | [bar] | Low Pressure | High Pressure | | Model | U11 Code |
| LP | PSV01 | -0.5~7 | 0.7~5 | — | — | Auto | — | √ | PSV01AL-S01 | 10660012102 |
| LP | PSV01 | -0.5~7 | 0.7~5 | — | — | Auto | — | √ | PSV01AL-F01 | PSVX0000602 |
| LP | PSV01 | -0.5~7 | 0.7 | — | — | Man | — | √ | PSV01ML-S01 | 10660013102 |
| HP | PSV50 | — | — | 6~32 | 3~15 | — | Auto | × | PSV50AL-S51 | 10660012902 |
| HP | PSV50 | — | — | 6~32 | 3~15 | — | Auto | × | PSV50AL-F51 | PSVX0001102 |
| HP | PSV50 | — | — | 6~32 | 3 | — | Man | × | PSV50ML-S51 | 10660013002 |
| HP | PSV50 | — | — | 6~32 | 3 | — | Man | × | PSV50ML-F51 | PSVX0001502 |
| HP | PSV50 | — | — | 6~32 | 4~15 | — | Auto | √ | PSV50AL-S01 | 10660014202 |
| HP | PSV50 | — | — | 6~32 | 4~15 | — | Auto | √ | PSV50AL-F01 | PSVX0001002 |
| HP | PSV50 | — | — | 6~32 | 4 | — | Man | √ | PSV50ML-S01 | 10660018402 |
| HP | PSV50 | — | — | 6~32 | 4 | — | Man | √ | PSV50ML-F01 | PSVX0001202 |
| HP | PSV60 | — | — | 8~42 | 5~15 | — | Auto | √ | PSV60AL-S01 | 10660014302 |
| HP | PSV60 | — | — | 8~42 | 5~15 | — | Auto | √ | PSV60AL-F01 | PSVX0001602 |
| HP | PSV60 | — | — | 8~42 | 5 | — | Man | √ | PSV60ML-S01 | 10660019202 |
| HP | PSV60 | — | — | 8~42 | 5 | — | Man | √ | PSV60ML-F01 | PSVX0001802 |
| Dual | PSV15 | -0.5~7 | 0.7~5 | 6~32 | 4 | Auto | Auto | × | PSV15AAL-S51 | 10660012302 |
| Dual | PSV15 | -0.5~7 | 0.7~5 | 6~32 | 4 | Auto | Auto | × | PSV15AAL-F51 | PSVX0000802 |
| Dual | PSV15 | -0.5~7 | 0.7~5 | 6~32 | 4 | Auto | Man | × | PSV15AML-S51 | 10660012202 |
| Dual | PSV15 | -0.5~7 | 0.7~5 | 6~32 | 4 | Auto | Man | × | PSV15AML-F51 | PSVX0001402 |
| Dual | PSV15 | -0.5~7 | 0.7~5 | 6~32 | 5 | Auto | Auto | √ | PSV15AAL-S01 | 10660014402 |
| Dual | PSV15 | -0.5~7 | 0.7~5 | 6~32 | 5 | Auto | Auto | √ | PSV15AAL-F01 | PSVX0000702 |
| Dual | PSV15 | -0.5~7 | 0.7~5 | 6~32 | 5 | Auto | Man | √ | PSV15AML-S01 | 10660016702 |
| Dual | PSV15 | -0.5~7 | 0.7~5 | 6~32 | 5 | Auto | Man | √ | PSV15AML-F01 | PSVX0000902 |
| Dual | PSV16 | -0.5~7 | 0.7~5 | 8~42 | 5 | Auto | Auto | × | PSV16AAL-S51 | 10660018602 |
| Dual | PSV16 | -0.5~7 | 0.7~5 | 8~42 | 5 | Auto | Man | × | PSV16AML-S51 | 10660019402 |
| Dual | PSV16 | -0.5~7 | 0.7~5 | 8~42 | 6 | Auto | Auto | √ | PSV16AAL-S01 | 10660014102 |
| Dual | PSV16 | -0.5~7 | 0.7~5 | 8~42 | 6 | Auto | Auto | √ | PSV16AAL-F01 | PSVX0001702 |
| Dual | PSV16 | -0.5~7 | 0.7~5 | 8~42 | 6 | Auto | Man | √ | PSV16AML-S01 | 10660018702 |

# PRESSURE CONTROLS

| PSV01, PSV50, PSV60, PSV15, PSV16 Solder Connection | | | | | | | | | | | | |
|---|---|---|---|---|---|---|---|---|---|---|---|---|
| Pressure | Type | Low Pressure (LP) | | High Pressure (HP) | | Reset | | PED 2014 68/EU EN 12263 Certi-fied[1)] | Ordering Code | | Ordering Code | |
| | | Range | Differential Pressure ΔP | Range | Differential Pressure ΔP | | | | Solder ODF 1/4 in. | | Solder ODF 6mm | |
| | | [bar] | [bar] | [bar] | [bar] | LP | HP | | Model | U11 Code | Model | U11 Code |
| LP | PSV01 | -0.5~7 | 0.7~5 | — | — | Auto | — | √ | PSV01AH-S01 | 10660021702 | | |
| LP | PSV01 | -0.5~7 | 0.7~5 | — | — | Auto | — | √ | | | PSV01AH-F02 | PSVX0000502 |
| HP | PSV50 | — | — | 6~32 | 3~15 | — | Auto | × | PSV50AH-S51 | 10660020802 | | |
| HP | PSV50 | — | — | 6~32 | 4~15 | — | Auto | √ | PSV50AH-S01 | 10660020702 | | |
| Dual | PSV15 | -0.5~7 | 0.7~5 | 6~32 | 4 | Auto | Auto | × | PSV15AAH-S51 | 10660021302 | | |
| Dual | PSV15 | -0.5~7 | 0.7~5 | 6~32 | 4 | Auto | Man | × | PSV15AMH-S51 | 10660020302 | | |
| Dual | PSV15 | -0.5~7 | 0.7~5 | 6~32 | 5 | Auto | Auto | √ | PSV15AAH-S01 | 10660020102 | | |
| Dual | PSV15 | -0.5~7 | 0.7~5 | 6~32 | 5 | Auto | Auto | √ | | | PSV15AAH-F02 | PSVX0001902 |
| Dual | PSV15 | -0.5~7 | 0.7~5 | 6~32 | 5 | Auto | Man | √ | PSV15AMH-S01 | 10660020202 | | |
| Dual | PSV16 | -0.5~7 | 0.7~5 | 8~42 | 5 | Auto | Auto | × | PSV16AAH-S51 | 10660022502 | | |
| Dual | PSV16 | -0.5~7 | 0.7~5 | 8~42 | 5 | Auto | Man | × | PSV16AMH-S51 | 10660022402 | | |
| Dual | PSV16 | -0.5~7 | 0.7~5 | 8~42 | 6 | Auto | Auto | √ | PSV16AAH-S01 | 10660020402 | | |
| Dual | PSV16 | -0.5~7 | 0.7~5 | 8~42 | 6 | Auto | Man | √ | PSV16AMH-S01 | 10660020502 | | |

# PRESSURE CONTROLS

| PSV01, PSV50, PSV15, Capillary with nut | | | | | | | | | | |
|---|---|---|---|---|---|---|---|---|---|---|
| Pressure | Type | Low Pressure (LP) | | High Pressure (HP) | | Reset | | PED 2014 68/EU Certified | Ordering Code | |
| | | Range | Differential Pressure ΔP | Range | Differential Pressure ΔP | | | | Capillary+Nut 7/16-20UNF (1/4in. & 6mm) | |
| | | [bar] | [bar] | [bar] | [bar] | Low Pressure | High Pressure | | Model | U11 Code |
| LP | PSV01 | -0.5~7 | 0.7~5 | — | — | Auto | — | √ | PSV01AM-S01 | 10660012802 |
| LP | PSV01 | -0.5~7 | 0.7 | — | — | Man | — | √ | PSV01MM-S01 | 10660019502 |
| HP | PSV50 | — | — | 6~32 | 3~15 | — | Auto | × | PSV50AM-S51 | 10660012702 |
| HP | PSV50 | — | — | 6~32 | 3 | — | Man | × | PSV50MM-S51 | 10660019702 |
| HP | PSV50 | — | — | 6~32 | 4~15 | — | Auto | √ | PSV50AM-S01 | 10660016502 |
| HP | PSV50 | — | — | 6~32 | 4 | — | Man | √ | PSV50MM-S01 | 10660019602 |
| HP | PSV60 | — | — | 8~42 | 5~15 | — | Auto | √ | PSV60AM-S01 | 10660019802 |
| HP | PSV60 | — | — | 8~42 | 5 | — | Man | √ | PSV60MM-S01 | 10660020602 |
| Dual | PSV15 | -0.5~7 | 0.7~5 | 6~32 | 4 | Auto | Auto | × | PSV15AAM-S51 | 10660018502 |
| Dual | PSV15 | -0.5~7 | 0.7~5 | 6~32 | 4 | Auto | Man | × | PSV15AMM-S51 | 10660022702 |
| Dual | PSV15 | -0.5~7 | 0.7~5 | 6~32 | 5 | Auto | Auto | √ | PSV15AAM-S01 | 10660021602 |
| Dual | PSV15 | -0.5~7 | 0.7~5 | 6~32 | 5 | Auto | Man | √ | PSV15AMM-S01 | 10660021502 |
| Dual | PSV16 | -0.5~7 | 0.7~5 | 8~42 | 5 | Auto | Auto | × | PSV16AAM-S51 | 10660022102 |
| Dual | PSV16 | -0.5~7 | 0.7~5 | 8~42 | 5 | Auto | Man | × | PSV16AMM-S51 | 10660021902 |
| Dual | PSV16 | -0.5~7 | 0.7~5 | 8~42 | 6 | Auto | Auto | √ | PSV16AAM-S01 | 10660021402 |
| Dual | PSV16 | -0.5~7 | 0.7~5 | 8~42 | 6 | Auto | Man | √ | PSV16AMM-S01 | 10660019902 |

**Tips:** Pressure controls which are certified by TÜV, Rheinland acc. to PED 2014 68/EU, EN12263 are designed with double bellows at high pressure, and they provide "fail-safe" function.
The double bellows system prevents loss of charge in the event of the inner bellow rupture.
A rupture in the inner bellow will cause the control cut-out pressure to fall about 3 times less the set value and the compressor will stop.
A rupture in the outer bellows will cause the control cut-out pressure to fall to about 3 bar under the set value and providing the so-called "fail-safe" function.

# PRESSURE CONTROLS

## DIMENSIONAL DRAWING

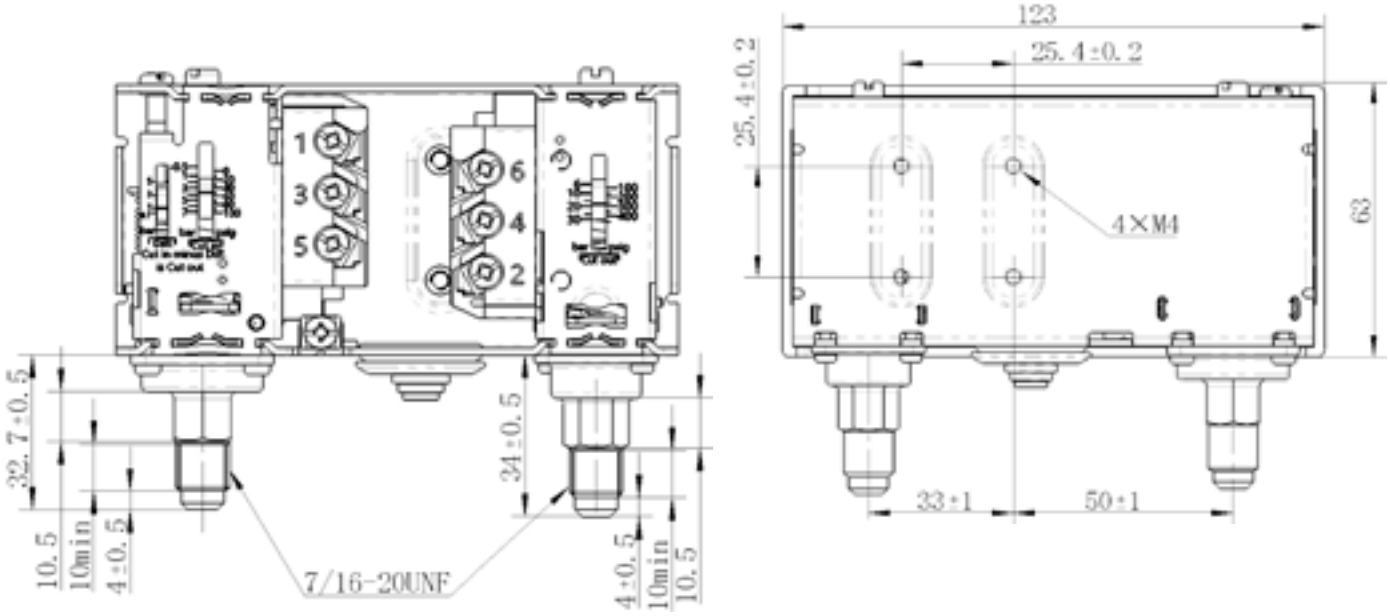


***PSV15/16××L***

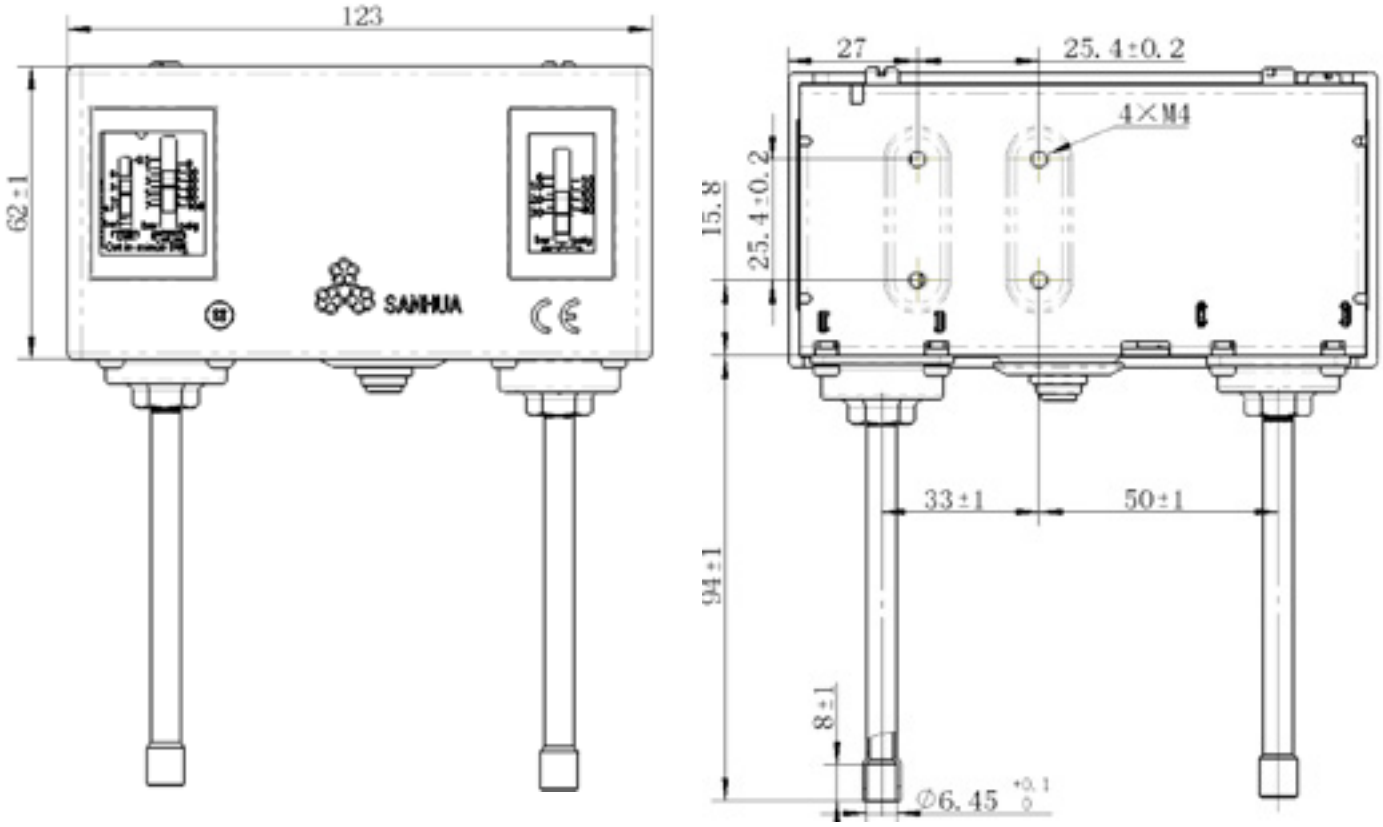


***PSV15/16 ××H***

# PRESSURE CONTROLS

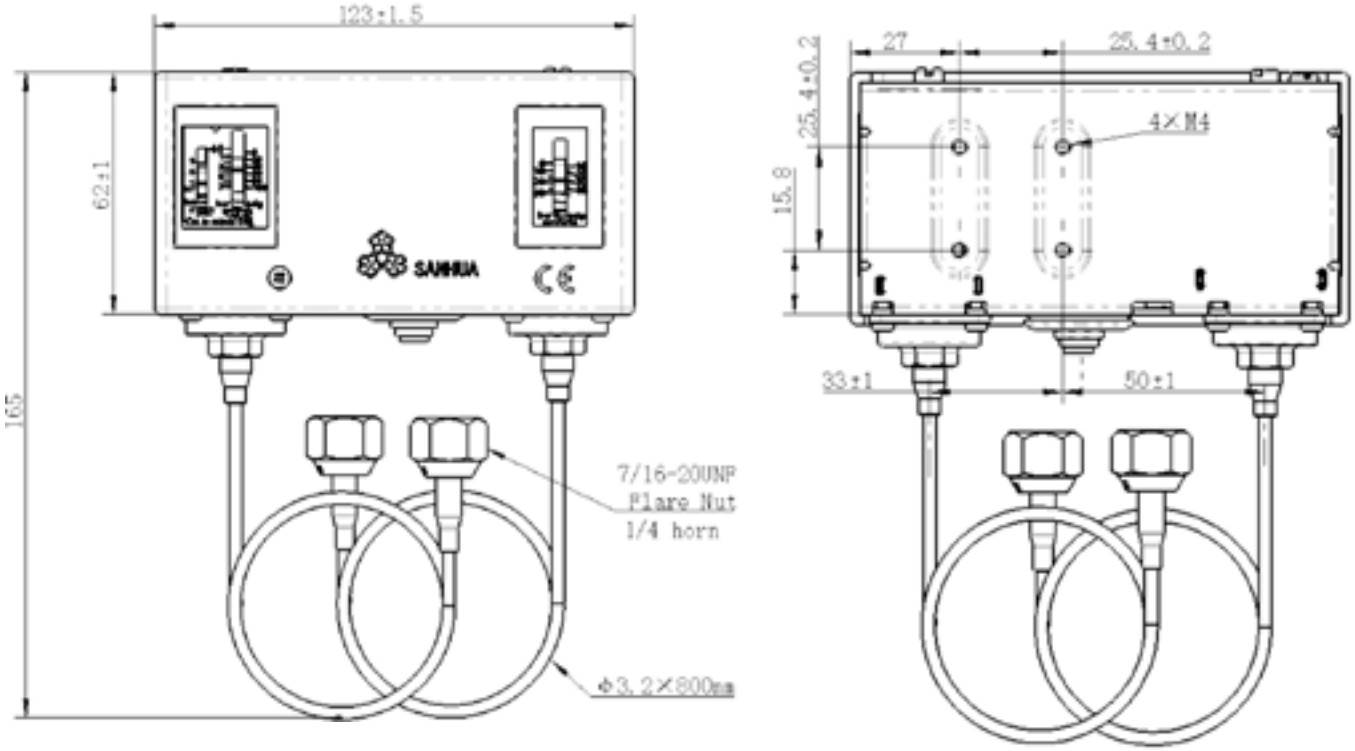


***PSV15/16 ××M***

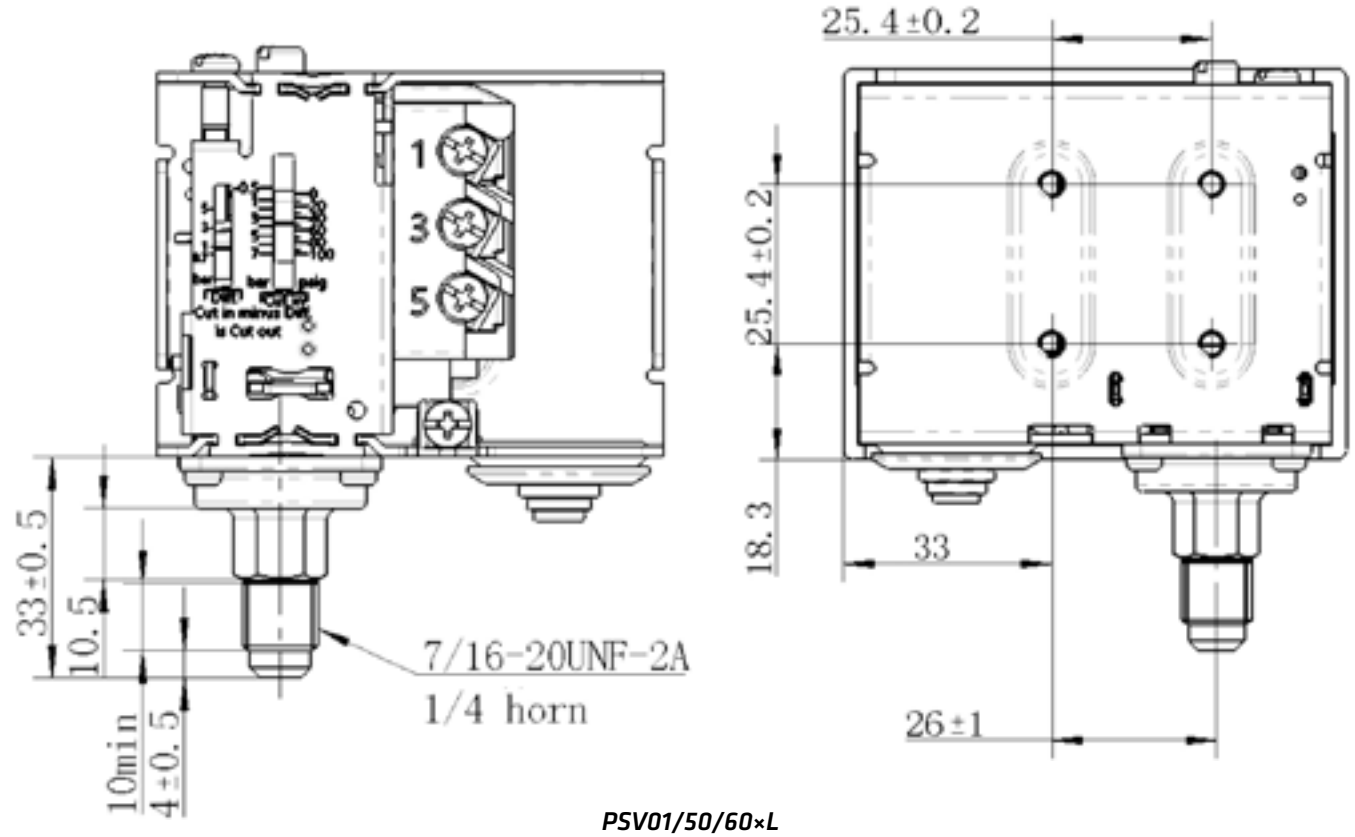


***PSV01/50/60×L***

# PRESSURE CONTROLS

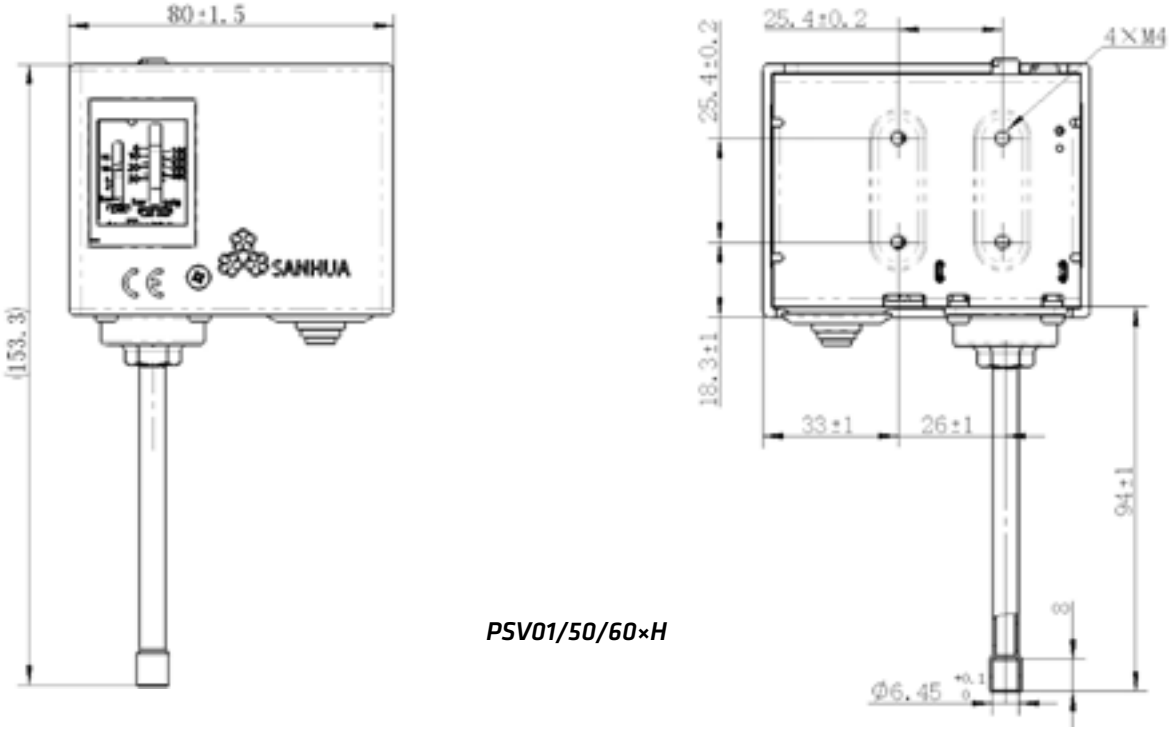


***PSV01/50/60×H***

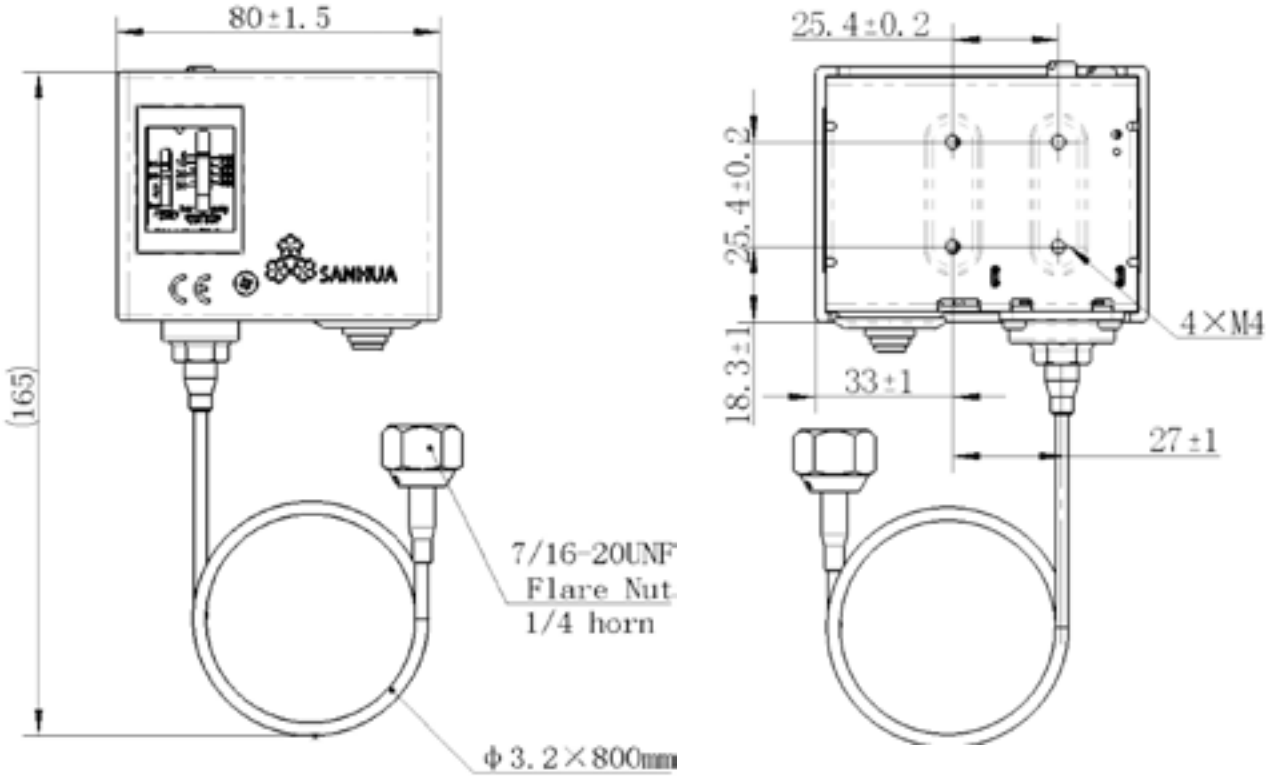


***PSV01/50/60×M***

# PRESSURE CONTROLS

## INSTALLATION PLATE

| Model | U11 code |
|---|---|
| PS50-50001 | 20660018502 |

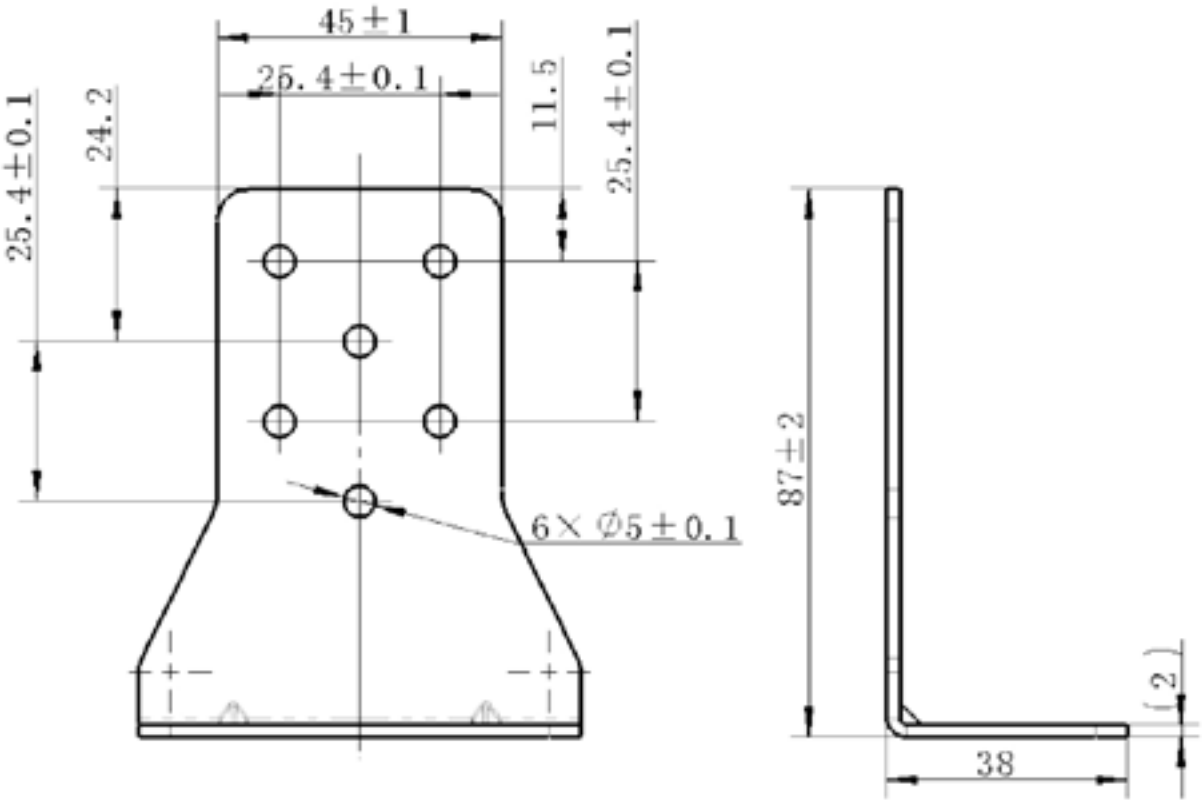

# PRESSURE CONTROLS

## CONTACT SYSTEM

***Single PSV01***

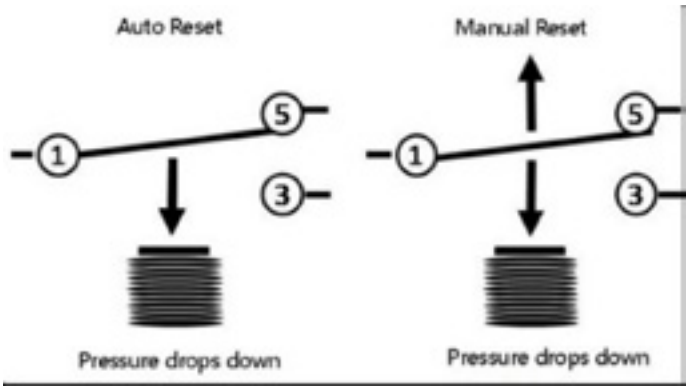


***Single PSV50/60***

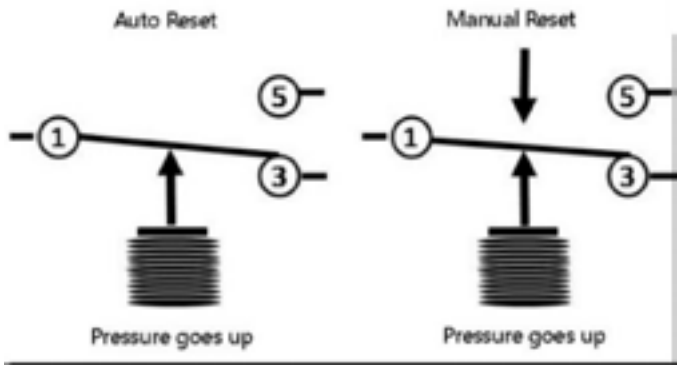


***Dual PSV15/16AA***

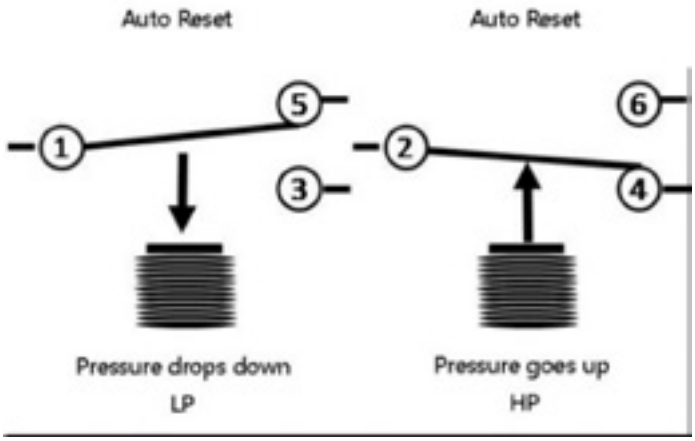


***Dual PSV15/16AM***

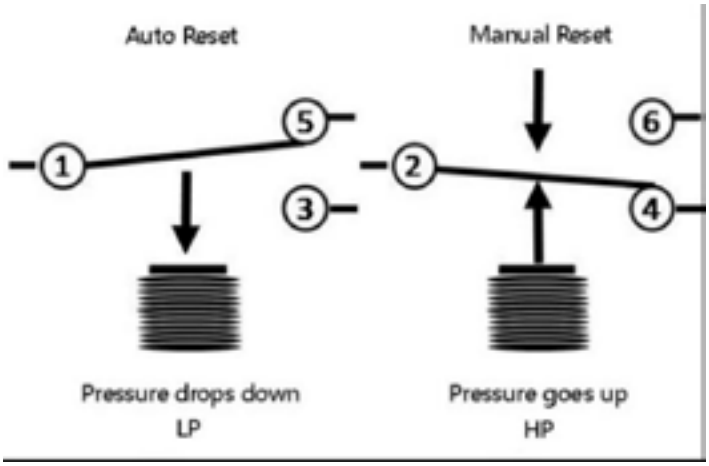


***Dual PSV15/16MM***

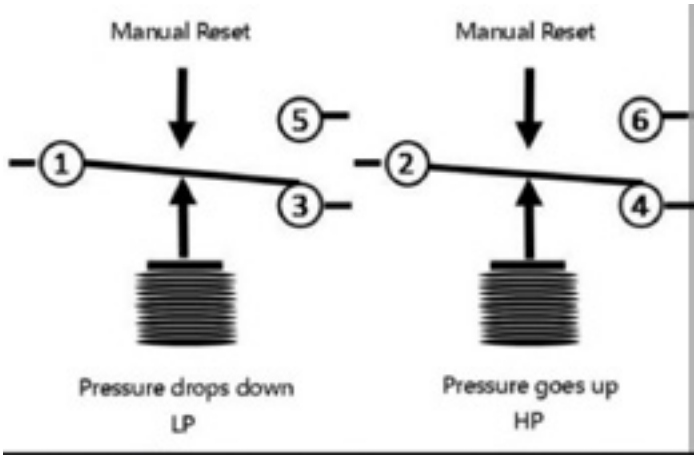

# PRESSURE CONTROLS

Requirements for usage with approved A2L refrigerants (R1234ze, R1234yz, R1234yf, R32, R452B, R454A, R454B, R454C, R455A):

- Only trained and experienced personnel can work with flamable refigerants and make instalation, handling and service of PSV pressure switches in such systems with appropriate tools
- It is strictly forbidden to exceed declared electrical loads for PSV
- PSV has to be used as integrated component into the system with necessary protection against unautorized access
- Necessary to avoid extreme working conditions which can cause damage of presure switch or its critical mulfunctioning : e.g. excessive vibration, contact with water, external mechnical impact which can destroy PSV, corrosive environment
- System has to be designed in a way to avoid very frequent cycling of pressure switch (by setting resonable on/off pressures, differential, etc)
- Design of complete system should prevent accumulation and storage of high concentration of refigerant around pressure switch.

***MPS*** *SERIES*

# MINI PRESSURE SWITCHES

(Standard range: for fluids GROUP 2 or 1 according to Directive 2014/68/EU or GROUP A1, A2L and A3 according to ANSI-ASHRAE 34-2016)
MPS are mini pressure switches with non-adjustable settings. Due to its low weight and compact size, they are usually directly installed on the refrigeration, air conditioning, heat pump systems for high-pressure, low-pressure protection or for fan control.

## FEATURES

- MODELS FOR DIFFERENT APPLICATIONS: HP/LP PROTECTION, FAN CONTROL
- VARIOUS PRESSURE SETTING AND CONNECTIONS.
- ENCAPSULATED, WATER AND DUST PROTECTED WITH IP67 PROTECTION LEVEL
- SMALL SIZE AND LIGHT WEIGHT FOR DIRECT MOUNTING

### GENERAL SPECIFICATION

- Applicable for all common HFC, HFO, HC refrigerants such as: R134a, R404A, R407A/F, R407C, R410A, R448A, R449A, R450A, R452A, R513A, R507A, R290, R1234ze(E), R1234yf, R447A, R452B, R454B, R454C, R455A
- Medium temperature TS min./max.: -40°C/135 °C
- Ambient temperature min./max.: -25°C / +70°C
- MWP: MPS1AL/AH 10 bar; MPS2AL/AH 50 bar
- IP67 after Installation (Lead Wire); IP65 after Installation (Tab Terminal)
- Relative humidity: 0 to 95% RH
- Installation position: Liquid, suction, and discharge line (respecting pressure and temperature limits)
- Declarations/Certification/Approvals:
  DoC acc. PED (2014/68/EU), LVD (2014/35/EU), EN60335-2-24/40/89
  CE – EN60730 (LVD), EN60335-2-24/40/89
  CE – EN12263 (PED Cat. IV)
  UL – UL60730: UL file SA44584

# MINI PRESSURE SWITCHES

## ELECTRICAL RATINGS

*AC 120V/240V, DC 5V/12V Rated current 1A to 6A*
*DC 24 Rated current 1A to 4A*

| Application | Model | Code | Cut-out & tolerance bar | Cut-in & tolerance bar | Reset | Contact system type | Connections Solder | | Connections Flare | Cable length (mm) |
|---|---|---|---|---|---|---|---|---|---|---|
| | | | | | | | 6 mm | ¼ inch | Female (with depressor) | |
| Hight pressure Cut-out | MPS2AH17 | 10570001901 | 19 ±1 | 15 ±1.5 | Auto | SPST-NC | • | | | 1000 |
| | MPS2AH26 | 10570004101 | 26 ±1 | 20 ±1.5 | Auto | SPST-NC | | • | | 2000 |
| | MPS2AH29 | 10570002401 | 31 ±1 | 24 ±1.5 | Auto | SPST-NC | • | | | 1500 |
| | MPS2AH82[1)] | 10570004801 | 30 ±1 | 25 ±1.5 | Auto | SPST-NC | | • | | |
| | MPS2AH01 | 10570000301 | 41.5 +0/-1.5 | 32 ±2 | Auto | SPST-NC | | • | | 1000 |
| | MPS2AH02 | 10570000101 | 45 +0/-3 | 34 ±2 | Auto | SPST-NC | | • | | 1000 |
| Low pressure Cut-out | MPS1AH13 | 10570004201 | 0.3 ±0.3 | 1.2 ±0.3 | Auto | SPST-NO | • | | | 2000 |
| | MPS1AH09 | 10570003401 | 0.6 ±0.5 | 1.8 ±0.4 | Auto | SPST-NO | • | | | 1000 |
| | MPS1AH12 | 10570002501 | 0.7 ±0.5 | 1.7 ±0.4 | Auto | SPST-NO | • | | | 1500 |
| | MPS1AL01 | 10570000901 | 1 ±0.2 | 1.6 ±0.2 | Auto | SPST-NO | | | • | 1000 |
| Fan control | MPS2AL05[2)] | 10570001101 | 9 ±0.5 | 12 ±0.7 | Auto | SPST-NO | | | • | 1000 |

**Note:** 1) model with tab terminals
2) with AMP 2-520263-2 connectors on electrical cables

# SOLENOID VALVES

*EASIER AUTOMATIC CONTROL*
*HIGHER EFFICIENCY*

SANHUA

*"Yearly SANHUA supplies over 20 Million solenoid valves to the refrigeration, HVAC&R and home appliances Industries worldwide."*

*DISCOVER WHY*
**sanhuaeurope.com**

***MDF*** *SERIES*

# SOLENOID VALVE

**(Standard range:** for fluids GROUP 2 according to Directive 2014/68/EU or GROUP A1 according to ANSI-ASHRAE 34-2016).
MDF series solenoid valves are direct operated or pilot operated solenoid valves, mainly used in refrigerant control of various devices such as refrigerating and freezing systems, air conditioners and heat pumps.

## FEATURES

- COILS: LOW ENERGY CONSUMPTION, RELIABLE
- GREAT VALVE OPENING PERFORMANCE, HIGH MOPD
- COILS ARE DOUBLE SEALED, WATER TIGHT AND SAFE
- QUICK INSTALLATION COIL MQ-A11 FOR FAST AND EASY INSTALLATION AVAILABLE

### GENERAL SPECIFICATIONS[1)]

- Applicable for all common HFC, HFO refrigerants such as: R134a, R404A, R407A/F, R407C, R410A, R448A, R449A, R450A, R452A, R513A, R507A
- Suitable for oil-free systems
- Maximum Operating Pressure:
  - MDF 2H...22H and MDF 2L...15L: 4,9 MPa (49 bar)
  - MDF 25H...40H: 4,5 MPa (45 bar)
- Medium temperature TS min./max.:
  - MDF 2H...22H and MDF 2L...15L: -30°C/105°C
  - MDF 25H...40H: -40°C/140°C
- Ambient temperature min./max.: -30°C / +55°C
- Relative humidity: 0 to 95% RH
- Installation position:
  - Liquid, suction and discharge line
  - Preferably coil upwards and flow direction corresponds to the arrow
- Declarations/Certification/Approvals:
  DoC acc. PED (2014/68/EU), LVD (2014/35/EU), UL approval

# SOLENOID VALVE

## TECHNICAL PARAMETERS OF VALVE BODY

| Valve Body | | Usable Coils | Normal position | Actuation | Kv [m³/h] | MOP [Mpa] | Max. OPD [MPa] Air[7] | | Min. OPD[7] [Mpa] |
|---|---|---|---|---|---|---|---|---|---|
| Solder | Flare | | | | | | AC[4] coil | DC[5][6] coil | |
| MDF-A03-2H | MDF-A03-2L | AC + DC | NC[1] | Direct | 0,16 | 4,9 | 3,1 | 3,1 | 0,00 |
| MDF-A03-3H | MDF-A03-3L | | | | 0,23 | | | | |
| MDF-A03-6H | MDF-A03-6L | AC | | Pilot[2] | 0,8 | | | NR | 0,005 |
| MDF-D03-6H | MDF-D03-6H | DC | | | | | NP | 2,8 | |
| MDF-A03-10H | MDF-A03-10L | AC | | | 1,9 | | 3,1 | NR | |
| MDF-D03-10H | MDF-D03-10H | DC | | | | | NP | 2,8 | |
| MDF-A03-15H | MDF-A03-15L | AC | | | 2,3 | | 3,1 | NR | |
| MDF-D03-15H | MDF-D03-15L | DC | | | | | NP | 2,8 | |
| MDF-A03-15H | - | AC | | | 3,3 | | 3,1 | NR | |
| MDF-A03-20H | | AC + DC | | | 5,0 | | | 3,1 | 0,02 |
| MDF-A03-22H | | | | | 5,9 | | | | |
| MDF-B03-25H | | | | Pilot (P)[3] | 10,0 | 4,5 | | | |
| MDF-B03-32H | | | | | 15,0 | | | | |
| MDF-B03-40H | | | | | 25,0 | | | | |

**Note:** 1) NC means: Normally closed valve
2) Membrane operated
3) Piston operated
4) NP means: not permitted to use, select MDF-A03 model
5) NR means: not recommended to use. Only possible with R134a and min. evaporation temp. / max. condensing temp. -15°C/+58°C, select MDF-D03 model
6) Pressure values valid for 24V DC coil. Values for 12V DC coils on request
7) Max. OPD at 85% Ue.(AC, Air); Max. OPD at 90% Ue.(DC, Air)

# SOLENOID VALVE

## DIMENSIONS

*Valve Body*
*Thread Connection*

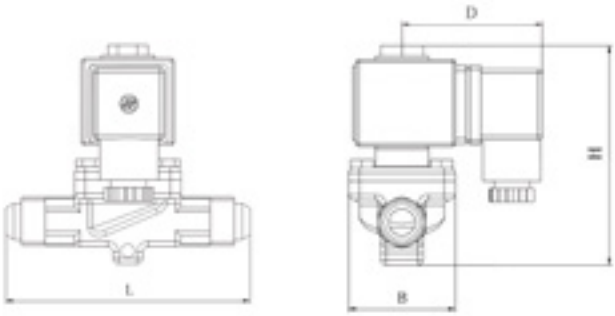


| Model Valve Body | Part Number[1) 2)] | SAE Flare Connection [inch] | Kv [m³/h] | PED Category Group 2 | Dimensions [mm] | | | |
|---|---|---|---|---|---|---|---|---|
| | | | | | L | B | D | H |
| MDF-A03-2L 001 | 10125000102 | 1/4 | 0,16 | 4.3 | 59 | 30 | 53 | 82 |
| MDF-A03-3L 001 | 10125009202 | 1/4 | 0,23 | 4.3 | 59 | 30 | 53 | 82 |
| MDF-A03-3L 003 | 10125004402 | 3/8 | 0,23 | 4.3 | 70 | 30 | 53 | 82 |
| MDF-A03-6L 001 | 10125009302 | 3/8 | 0,8 | 4.3 | 69 | 36 | 53 | 88 |
| MDF-D03-6L 005 | 10125018002 | 3/8 | 0,8 | 4.3 | 69 | 36 | 53 | 88 |
| MDF-A03-6L 003 | 10125004502 | 1/2 | 0,8 | 4.3 | 75 | 36 | 53 | 88 |
| MDF-D03-6L 003 | 10125017802 | 1/2 | 0,8 | 4.3 | 75 | 36 | 53 | 88 |
| MDF-A03-10L 003 | 10125005402 | 1/2 | 1,9 | 4.3 | 84 | 42 | 53 | 96 |
| MDF-D03-10L 003 | 10125018902 | 1/2 | 1,9 | 4.3 | 84 | 42 | 53 | 96 |
| MDF-A03-10L 001 | 10125009402 | 5/8 | 1,9 | 4.3 | 92 | 42 | 53 | 96 |
| MDF-D03-10L 001 | 10125018702 | 5/8 | 1,9 | 4.3 | 92 | 42 | 53 | 96 |
| MDF-A03-15L 001 | 10125009502 | 5/8 | 2,3 | 4.3 | 104 | 52 | 53 | 100 |
| MDF-D03-15L 001 | 10125019302 | 5/8 | 2,3 | 4.3 | 104 | 52 | 53 | 100 |
| MDF-A03-15L 003 | 10125004802 | 7/8 | 2,3 | 4.3 | 119 | 52 | 53 | 100 |
| MDF-D03-15L 003 | 10125019502 | 7/8 | 2,3 | 4.3 | 119 | 52 | 53 | 100 |

**Note:** 1) Extent of delivery: valve body without coil
2) Available also as industrial package. Contact Sanhua for more details.
3) Please contact Sanhua if you need MDF15 with Kv value 3.3.

# SOLENOID VALVE

## DIMENSIONS

*Valve Body - Inch Solder Connection*

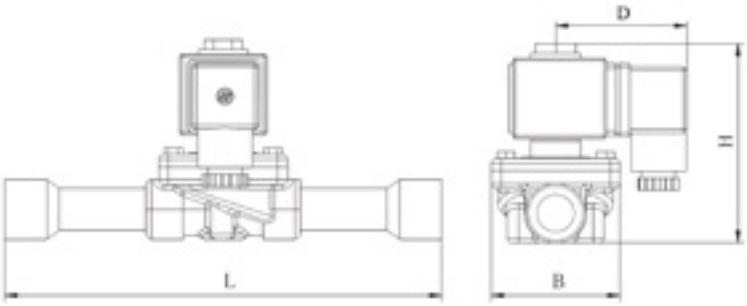


| Model Valve Body | Part Number[1) 2)] | Solder Connection ODF | Kv | PED Category Group 2 | Dimensions [mm] | | | |
|---|---|---|---|---|---|---|---|---|
| | | [inch] | [m³/h] | | L | B | D | H |
| MDF-A03-2H 001 | 10125011202 | 1/4 | 0,16 | 4.3 | 102 | 30 | 53 | 82 |
| MDF-A03-3H 001 | 10125011302 | 1/4 | 0,23 | 4.3 | 102 | 30 | 53 | 82 |
| MDF-A03-3H 003 | 10125003602 | 3/8 | 0,23 | 4.3 | 117 | 30 | 53 | 82 |
| MDF-A03-6H 001 | 10125011402 | 3/8 | 0,8 | 4.3 | 111 | 36 | 53 | 88 |
| MDF-D03-6H 001 | 10125017402 | 3/8 | 0,8 | 4.3 | 111 | 36 | 53 | 88 |
| MDF-A03-6H 003 | 10125004202 | 1/2 | 0,8 | 4.3 | 127 | 36 | 53 | 88 |
| MDF-D03-6H 003 | 10125017502 | 1/2 | 0,8 | 4.3 | 127 | 36 | 53 | 88 |
| MDF-A03-10H 001 | 10125011502 | 1/2 | 1,9 | 4.3 | 127 | 42 | 53 | 95 |
| MDF-D03-10H 001 | 10125017202 | 1/2 | 1,9 | 4.3 | 127 | 42 | 53 | 95 |
| MDF-A03-10H 003 | 10125006302 | 5/8 | 1,9 | 4.3 | 160 | 42 | 53 | 95 |
| MDF-D03-10H 003 | 10125018402 | 5/8 | 1,9 | 4.3 | 160 | 42 | 53 | 95 |
| MDF-A03-15H 005 | 10125003702 | 5/8 | 2,3 | 4.3 | 176 | 52 | 53 | 100 |
| MDF-D03-15H 005 | 10125017102 | 5/8 | 2,3 | 4.3 | 176 | 52 | 53 | 100 |
| MDF-A03-15H 003 | 10125005002 | 7/8 | 2,3 | 4.3 | 176 | 52 | 53 | 100 |
| MDF-D03-15H 003 | 10125019002 | 7/8 | 2,3 | 4.3 | 176 | 52 | 53 | 100 |
| MDF-A03-15H 051 | MDFX0002102 | 5/8 | 3,3 | 4.3 | 176 | 52 | 53 | 100 |
| MDF-A03-15H 052 | MDFX0002202 | 7/8 | 3,3 | 4.3 | 176 | 52 | 53 | 100 |
| MDF-A03-20H 001 | 10125011702 | 7/8 | 5 | 4.3 | 191 | 60 | 53 | 117 |
| MDF-A03-22H 001 | 10125011802 | 7/8 | 5,9 | 4.3 | 281 | 60 | 53 | 117 |
| MDF-A03-20H 003 | 10125005602 | 1-1/8 | 5 | 4.3 | 214 | 52 | 53 | 117 |
| MDF-A03-22H 009 | 10125006202 | 1-1/8 | 5,9 | 4.3 | 281 | 60 | 53 | 117 |
| MDF-B03-25H 003 | 10125006902 | 1-1/8 | 10 | 4.3 | 256 | 76 | 53 | 144 |
| MDF-A03-22H 003 | 10125005102 | 1-3/8 | 5,9 | 4.3 | 281 | 60 | 53 | 117 |
| MDF-B03-25H 004 | 10125006802 | 1-3/8 | 10 | 4.3 | 280 | 76 | 53 | 144 |
| MDF-B03-32H 001 | 10125009102 | 1-3/8 | 15 | 4.3 | 281 | 76 | 53 | 144 |
| MDF-B03-32H 002 | 10125007502 | 1-5/8 | 15 | I | 281 | 76 | 53 | 144 |
| MDF-B03-40H 002 | 10125004302 | 1-5/8 | 25 | I | 281 | 84 | 53 | 152 |
| MDF-B03-40H 004 | 10125007702 | 2-1/8 | 25 | I | 281 | 84 | 53 | 152 |

**Note:** 1) Extent of delivery: valve body without coil
2) Available also as industrial package. Contact Sanhua for more details.

# SOLENOID VALVE

## DIMENSIONS

*Valve Body – Metrical Solder Connection*

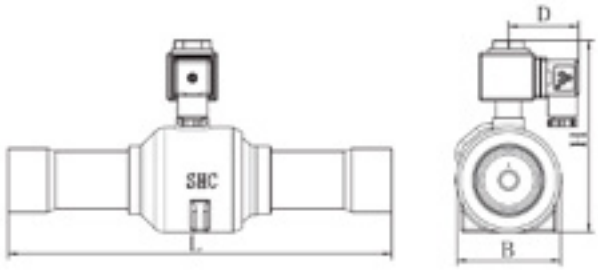


| Model Valve Body | Part Number[1) 2)] | Solder Connection ODF | Kv | PED Category Group 2 | Dimensions [mm] | | | |
|---|---|---|---|---|---|---|---|---|
| | | [mm] | [m³/h] | | L | B | D | H |
| MDF-A03-2H 003 | 10125006502 | 6 | 0,16 | 4.3 | 102 | 30 | 53 | 82 |
| MDF-A03-3H 005 | 10125003802 | 6 | 0,23 | 4.3 | 102 | 30 | 53 | 82 |
| MDF-A03-3H 007 | 10125003402 | 10 | 0,23 | 4.3 | 117 | 30 | 53 | 82 |
| MDF-A03-6H 005 | 10125004102 | 10 | 0,8 | 4.3 | 111 | 36 | 53 | 88 |
| MDF-D03-6H 005 | 10125016802 | 10 | 0,8 | 4.3 | 111 | 36 | 53 | 88 |
| MDF-A03-6H 007 | 10125006702 | 12 | 0,8 | 4.3 | 127 | 36 | 53 | 88 |
| MDF-D03-6H 007 | 10125018202 | 12 | 0,8 | 4.3 | 127 | 36 | 53 | 88 |
| MDF-A03-10H 005 | 10125003502 | 12 | 1,9 | 4.3 | 127 | 42 | 53 | 95 |
| MDF-D03-10H 005 | 10125017002 | 12 | 1,9 | 4.3 | 127 | 42 | 53 | 95 |
| MDF-A03-10H 003 | 10125006302 | 16 | 1,9 | 4.3 | 160 | 42 | 53 | 95 |
| MDF-D03-10H 003 | 10125018402 | 16 | 1,9 | 4.3 | 160 | 42 | 53 | 95 |
| MDF-A03-15H 005 | 10125003702 | 16 | 2,3 | 4.3 | 176 | 52 | 53 | 100 |
| MDF-D03-15H 005 | 10125017102 | 16 | 2,3 | 4.3 | 176 | 52 | 53 | 100 |
| MDF-A03-15H 003 | 10125005002 | 22 | 2,3 | 4.3 | 176 | 52 | 53 | 100 |
| MDF-D03-15H 003 | 10125019002 | 22 | 2,3 | 4.3 | 176 | 52 | 53 | 100 |
| MDF-A03-15H 051 | MDFX0002102 | 16 | 3,3 | 4.3 | 176 | 52 | 53 | 100 |
| MDF-A03-15H 052 | MDFX0002202 | 22 | 3,3 | 4.3 | 176 | 52 | 53 | 100 |
| MDF-A03-20H 001 | 10125011702 | 22 | 5 | 4.3 | 191 | 52 | 53 | 117 |
| MDF-A03-22H 001 | 10125011802 | 22 | 5,9 | 4.3 | 281 | 60 | 53 | 117 |
| MDF-A03-20H 007 | 10125005702 | 28 | 5 | 4.3 | 214 | 52 | 53 | 117 |
| MDF-A03-22H 011 | 10125000302 | 28 | 5,9 | 4.3 | 281 | 60 | 53 | 117 |
| MDF-B03-25H 005 | 10125007002 | 28 | 10 | 4.3 | 256 | 76 | 53 | 144 |
| MDF-A03-22H 003 | 10125005102 | 35 | 5,9 | 4.3 | 281 | 60 | 53 | 117 |
| MDF-B03-25H 004 | 10125006802 | 35 | 10 | 4.3 | 280 | 76 | 53 | 144 |
| MDF-B03-32H 001 | 10125009102 | 35 | 15 | 4.3 | 281 | 76 | 53 | 144 |
| MDF-B03-32H 003 | 10125007102 | 42 | 15 | I | 281 | 76 | 53 | 144 |
| MDF-B03-40H 003 | 10125007602 | 42 | 25 | I | 281 | 84 | 53 | 152 |
| MDF-B03-40H 004 | 10125007702 | 54 | 25 | I | 281 | 84 | 53 | 152 |

**Note:** 1) Extent of delivery: valve body without coil
2) Available also as industrial package. Contact Sanhua for more details.

# SOLENOID VALVE

## TECHNICAL PARAMETERS OF COIL

| Model Coil[1)] | Part Number[2)] | Plug type | Supply | Rated Voltage [V] | Power [W] | Voltage Tolerance | Insu-lation Class | Protection Class (w/plug) | UL Approval |
|---|---|---|---|---|---|---|---|---|---|
| MQ-A03024-000001 | 10820009902 | DIN Plug | AC | 24 | 10,5W (50Hz) 8,5W (60Hz) | -15% +10% | F | IP67 | NO |
| MQ-A03024-000018 | 10820013702 | | | | | | | IP65 | YES |
| MQ-A0311A-000001 | 10820010102 | | | 110 to 120 | 12W (50Hz) 10W (60Hz) | | | IP67 | NO |
| MQ-A0311A-000005 | 10820016502 | | | | | | | IP65 | YES |
| MQ-A0322G-000001[4)] | 10820010002 | | | 220 to 240 | 12W (50Hz) 10W (60Hz) | | | IP67 | NO |
| MQ-A0322G-000024 | 10820015002 | | | | | | | IP65 | YES |
| MQ-A11024-000001 | 10820009402 | Quick Install Plug[3)] | AC | 24 | 9,5 (50Hz) 8,5 (60Hz) | | | IP67 | OR[5)] |
| MQ-A1111A-000001 | 10820009202 | | | 110 to 120 | 11,5 (50Hz) 10,0 (60Hz) | | | | OR |
| MQ-A1122G-000001 | 10820009002 | | | 220 to 240 | 11 (50Hz) 9,5 (60Hz) | | | | OR |
| MQ-D03012-000002 | 10820001302 | DIN Plug | DC | 12 | 15 | ±10% | | IP67 | NO |
| MQ-D03024-000002 | 10820001002 | | | 24 | | | | | NO |
| MQ-D03110-000003 | OR | | | 110 | | | | | NO |

**Note:** 1) Match with valve body: Please respect information in table "Technical Parameters of valve body". See page 2 of this document
2) Extent of delivery: coil body, fastening screw for the coil body, plug for electrical connection incl. Gaskets and fastening screws
3) Outer cable diameter: 7,1 to 9,7mm and cable core 0,75 to 2,5mm$^2$
4) Coil MQ-A0322G-000001 is third party certified for usage with flammable refrigerants (A2L, A3). Usage of the other coils (only without UL approval) with flammable refrigerants – please contact Sanhua.
5) OR: On Request

## DIMENSIONS - COILS

*MQ-A03 and MQ-D03 (Coils with DIN Plug):*

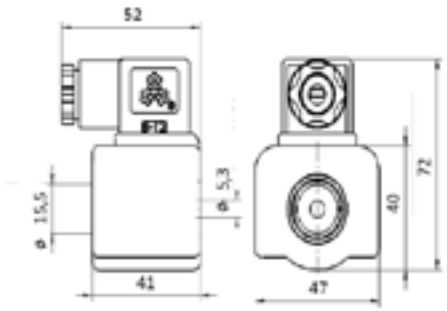


*MQ-11 (Coils with Quick Install Plug):*

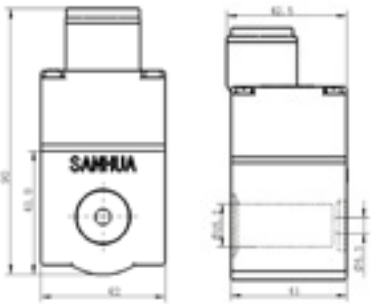


## ACCESSORIES

*Bracket*

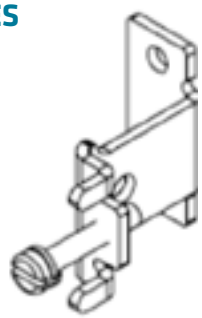

| Model[1)] | Part Number | Applicable Valve Models | |
|---|---|---|---|
| | | Solder | Flare |
| MDF-A03-033001 | 20125000902 | MDF-A03-2H | MDF-A03-2L |
| | | MDF-A03-3H | MDF-A03-3L |
| | | MDF-A03-6H | MDF-A03-6L |
| | | MDF-A03-10H | MDF-A03-10L |
| | | MDF-A03-15H | MDF-A03-15L |

**Note:** 1) Extent of delivery: bracket and screw

## FOR SERVICE PURPOSE PERMANENT MAGNET COIL AVAILABLE

| Coil Model | Part Number |
|---|---|
| KCT01 | 10108000102 |

***MDF*** *SERIES*

# SOLENOID VALVE

**(GreenTech range:** for fluids GROUP 1 according to Directive 2014/68/EU or GROUP A3/A2L according to ANSI-ASHRAE 34-2016).

MDF series solenoid valves are direct operated or pilot operated solenoid valves, mainly used in refrigerant control of various devices such as refrigerating and freezing systems, air conditioners and heat pumps.

## FEATURES

- COILS: LOW ENERGY CONSUMPTION, RELIABLE
- GREAT VALVE OPENING PERFORMANCE, HIGH MOPD
- COILS ARE DOUBLE SEALED, WATER TIGHT AND SAFE

### GENERAL SPECIFICATIONS[1)]

- Applicable for HC, HFC/HFO, HFO refrigerants such as: R290, R1234ze(E), R1234yf, R447A, R452B, R454B, R454C, R455A
- Suitable for oil-free systems
- Maximum Operating Pressure:
  - MDF 2H...22H: 4,9 MPa (49 bar)
  - MDF 25H...40H: 4,5 MPa (45 bar)
- Medium temperature TS min./max.:
  - MDF 2H...22H: -30°C/105°C
  - MDF 25H...40H: -40°C/140°C
- Ambient temperature min./max.: -30°C / +55°C
- Relative humidity: 0 to 95% RH
- Installation position:
  - Liquid, suction and discharge line
  - Preferably coil upwards and flow direction corresponds to the arrow
- Declarations/Certification/Approvals:
  DoC acc. PED (2014/68/EU), LVD (2014/35/EU)
  Certification acc. EN60335-2-24/40/89 as "not source of ignition"; EN60730
  Certification acc. PED Cat II: EN ISO 21922-2021 (for models in PED Cat. II)

# SOLENOID VALVE

## TECHNICAL PARAMETERS OF VALVE BODY

| Valve Body<br>Solder | Normal position | Actuation | Kv [m³/h] | MOP [MPa] Air | Max. OPD [Mpa] | Min. OPD [Mpa] |
|---|---|---|---|---|---|---|
| MDF-A03-2H | NC[1] | Direct | 0,16 | 4,9 | 3,1[3] | 0,00 |
| MDF-A03-3H | | | 0,23 | | | |
| MDF-A03-6H | | Pilot[2] | 0,8 | | | 0,005 |
| MDF-A03-10H | | | 1,9 | | | |
| MDF-A03-15H | | | 2,3 | | | |
| MDF-A03-15H | | | 3,3 | | | 0,02 |
| MDF-A03-20H | | | 5,0 | | | |
| MDF-A03-22H | | | 5,9 | | | |
| MDF-B03-25H | | Pilot (P)[3] | 10,0 | 4,5 | | |
| MDF-B03-32H | | | 15,0 | | | |
| MDF-B03-40H | | | 25,0 | | | |

**Note:** 1) NC means: Normally closed valve
2) Membrane operated
3) Piston operated
4) Max. OPD at 85% Ue.(Air). Other coils on request

## DIMENSIONS

*Valve Body - Inch Solder Connection, Models with MOP 45 bar*

| Model Valve Body | Part Number[1) 2)] | SAE Flare Connection [inch] | Kv [m³/h] | PED Category Fluid Group I | Dimensions [mm] | | | |
|---|---|---|---|---|---|---|---|---|
| | | | | | L | B | D | H |
| MDF-A03-2H 001 | 10125011202 | 1/4 | 0,16 | 4.3 | 102 | 30 | 53 | 82 |
| MDF-A03-3H 001 | 10125011302 | 1/4 | 0,23 | 4.3 | 102 | 30 | 53 | 82 |
| MDF-A03-3H 003 | 10125003602 | 3/8 | 0,23 | 4.3 | 117 | 30 | 53 | 82 |
| MDF-A03-6H 001 | 10125011402 | 3/8 | 0,8 | 4.3 | 111 | 36 | 53 | 88 |
| MDF-A03-6H 003 | 10125004202 | 1/2 | 0,8 | 4.3 | 127 | 36 | 53 | 88 |
| MDF-A03-10H 001 | 10125011502 | 1/2 | 1,9 | 4.3 | 127 | 42 | 53 | 95 |
| MDF-A03-10H 003 | 10125006302 | 5/8 | 1,9 | 4.3 | 160 | 42 | 53 | 95 |
| MDF-A03-15H 005 | 10125003702 | 5/8 | 2,3 | 4.3 | 176 | 52 | 53 | 100 |
| MDF-A03-15H 003 | 10125005002 | 7/8 | 2,3 | 4.3 | 176 | 52 | 53 | 100 |
| MDF-A03-15H 051 | MDFX0002102 | 5/8 | 3,3 | 4.3 | 176 | 52 | 53 | 100 |
| MDF-A03-15H 052 | MDFX0002202 | 7/8 | 3,3 | 4.3 | 176 | 52 | 53 | 100 |
| MDF-A03-20H 001 | 10125011702 | 7/8 | 5 | 4.3 | 191 | 52 | 53 | 117 |
| MDF-A03-22H 001 | 10125011802 | 7/8 | 5,9 | 4.3 | 281 | 60 | 53 | 117 |
| MDF-A03-20H 003 | 10125005602 | 1-1/8 | 5 | 4.3 | 214 | 52 | 53 | 117 |
| MDF-A03-22H 009 | 10125006202 | 1-1/8 | 5,9 | II | 281 | 60 | 53 | 117 |
| MDF-B03-25H 003 | 10125006902 | 1-1/8 | 10 | II | 256 | 76 | 53 | 144 |
| MDF-A03-22H 003 | 10125005102 | 1-3/8 | 5,9 | II | 281 | 60 | 53 | 117 |
| MDF-B03-25H 004 | 10125006802 | 1-3/8 | 10 | II | 280 | 76 | 53 | 144 |
| MDF-B03-32H 001 | 10125009102 | 1-3/8 | 15 | II | 281 | 76 | 53 | 144 |
| MDF-B03-32H 002 | 10125007502 | 1-5/8 | 15 | II | 281 | 76 | 53 | 144 |
| MDF-B03-40H 002 | 10125004302 | 1-5/8 | 25 | II | 281 | 84 | 53 | 152 |
| MDF-B03-40H 004 | 10125007702 | 2-1/8 | 25 | II | 281 | 84 | 53 | 152 |

# SOLENOID VALVE

*Valve Body – Metrical Solder Connection, Models with MOP 45 bar*

| Model Valve Body | Part Number[1) 2)] | SAE Flare Connection [mm] | Kv [m³/h] | PED Category Fluid Group I | Dimensions [mm] | | | |
|---|---|---|---|---|---|---|---|---|
| | | | | | L | B | D | H |
| MDF-A03-2H 003 | 10125006502 | 6 | 0,16 | 4.3 | 102 | 30 | 53 | 82 |
| MDF-A03-3H 005 | 10125003802 | 6 | 0,23 | 4.3 | 102 | 30 | 53 | 82 |
| MDF-A03-3H 007 | 10125003402 | 10 | 0,23 | 4.3 | 117 | 30 | 53 | 82 |
| MDF-A03-6H 005 | 10125004102 | 10 | 0,8 | 4.3 | 111 | 36 | 53 | 88 |
| MDF-A03-6H 007 | 10125006702 | 12 | 0,8 | 4.3 | 127 | 36 | 53 | 88 |
| MDF-A03-10H 005 | 10125003502 | 12 | 1,9 | 4.3 | 127 | 42 | 53 | 95 |
| MDF-A03-10H 003 | 10125006302 | 16 | 1,9 | 4.3 | 160 | 42 | 53 | 95 |
| MDF-A03-15H 005 | 10125003702 | 16 | 2,3 | 4.3 | 176 | 52 | 53 | 100 |
| MDF-A03-15H 003 | 10125005002 | 22 | 2,3 | 4.3 | 176 | 52 | 53 | 100 |
| MDF-A03-15H 051 | MDFX0002102 | 16 | 3,3 | 4.3 | 176 | 52 | 53 | 100 |
| MDF-A03-15H 052 | MDFX0002202 | 22 | 3,3 | 4.3 | 176 | 52 | 53 | 100 |
| MDF-A03-20H 001 | 10125011702 | 22 | 5 | 4.3 | 191 | 52 | 53 | 117 |
| MDF-A03-22H 001 | 10125011802 | 22 | 5,9 | 4.3 | 281 | 60 | 53 | 117 |
| MDF-A03-20H 007 | 10125005702 | 28 | 5 | 4.3 | 214 | 52 | 53 | 117 |
| MDF-A03-22H 011 | 10125000302 | 28 | 5,9 | 4.3 | 281 | 60 | 53 | 117 |
| MDF-B03-25H 005 | 10125007002 | 28 | 10 | II | 256 | 76 | 53 | 144 |
| MDF-A03-22H 003 | 10125005102 | 35 | 5,9 | II | 281 | 60 | 53 | 117 |
| MDF-B03-25H 004 | 10125006802 | 35 | 10 | II | 280 | 76 | 53 | 144 |
| MDF-B03-32H 001 | 10125009102 | 35 | 15 | II | 281 | 76 | 53 | 144 |
| MDF-B03-32H 003 | 10125007102 | 42 | 15 | II | 281 | 76 | 53 | 144 |
| MDF-B03-40H 003 | 10125007602 | 42 | 25 | II | 281 | 84 | 53 | 152 |
| MDF-B03-40H 004 | 10125007702 | 54 | 25 | II | 281 | 84 | 53 | 152 |

**Note:** 1) Extent of delivery: valve body without coil
2) Available also as industrial package. Contact Sanhua for more details

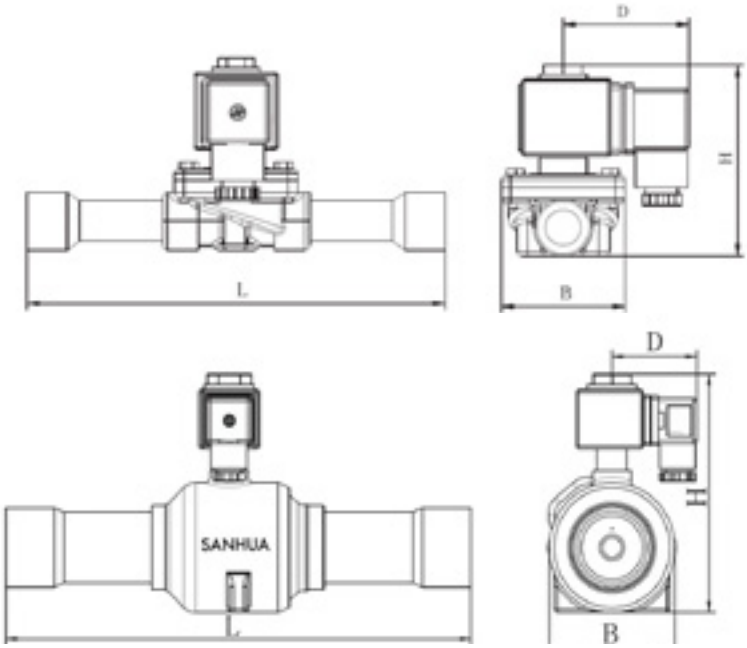

# SOLENOID VALVE

## TECHNICAL PARAMETERS OF COIL

| Model Coil[1)] | Part Number | Plug type | Supply | Rated Voltage [V] | Power [W] | Voltage Tolerance | Insulation Class | Protection Class (w/plug) | UL Approval |
|---|---|---|---|---|---|---|---|---|---|
| MQ-A03024-000001 | 10820009902 | DIN | AC | 24 | 10,5 (50Hz)<br>8,5 (60Hz) | -15%<br>+10% | F | IP67 | NO |
| MQ-A0311A-000001 | 10820010102 | | | 110 to 120 | 12 (50Hz)<br>10 (60Hz) | | | IP67 | NO |
| MQ-A0322G-000001 | 10820010002 | | | 220 to 240 | 12 (50Hz)<br>10 (60Hz) | | | IP67 | NO |

**Note:** 1) Extent of delivery: coil body, fastening screw for the coil body, plug for electrical connection incl. Gaskets and fastening screws

## DIMENSIONS - COILS

*MQ-A03 (Coil with DIN Plug):*

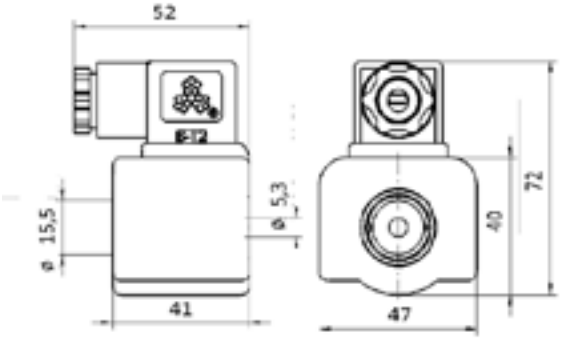


## ACCESSORIES

*Bracket*

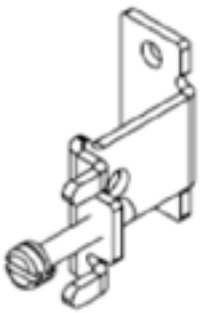

| Model[1)] | Part Number | Applicable Valve Models |
|---|---|---|
| | | Solder |
| MDF-A03-033001 | 20125000902 | MDF-A03-2H |
| | | MDF-A03-3H |
| | | MDF-A03-6H |
| | | MDF-A03-10H |
| | | MDF-A03-15H |

**Note:** 1) Extent of delivery: bracket and screw

## FOR SERVICE PURPOSE PERMANENT MAGNET COIL AVAILABLE

| Coil Model | Part Number |
|---|---|
| KCT01 | 10108000102 |

## ***MDF-A02 (NO)*** *SERIES*

# SOLENOID VALVE

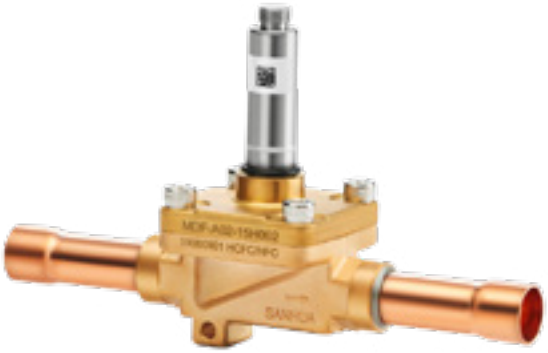

**(Standard range:** for fluids GROUP 2 according to Directive 2014/68/EU or GROUP A1 according to ANSI-ASHRAE 34-2016).
MDF-A02 series solenoid valves are normally open (NO) pilot operated solenoid valves, mainly used in refrigerant control of various devices such as refrigerating and freezing systems, air conditioners and heat pumps.

## FEATURES

- COILS: LOW ENERGY CONSUMPTION, RELIABLE
- GREAT VALVE OPENING PERFORMANCE, HIGH MOPD
- COILS ARE DOUBLE SEALED, WATERTIGHT AND SAFE

### GENERAL SPECIFICATIONS[1)]

- Applicable for all common HFC, HFO refrigerants such as: R134a, R404A, R407A/F, R407C, R410A, R448A, R449A, R450A, R452A, R513A, R507A
- Medium temperature: -30°C ~ +105°C
- Ambient temperature: -30°C ~ +55°C
- Relative humidity: 0 to 95%RH
- Installation position:
  - liquid, suction and discharge line
  - preferably coil upwards and flow direction corresponds to the arrow
- Declaration according to LVD and PED

**Note:** 1) Please contact Sanhua to get models for oil-free application.

# SOLENOID VALVE

## TECHNICAL PARAMETERS OF VALVE BODY

| Valve Body | | Usable Coils | Normal position | Actuation | Kv [m³/h] | MOP [Mpa] | Max. OPD [Mpa] | Min. OPD[4] [Mpa] |
|---|---|---|---|---|---|---|---|---|
| Solder | Flare | | | | | | | |
| MDF-A02-6H | MDF-A02-6L | AC/DC | NO[1] | Pilot[2] | 0,8 | 4,5 | 2,8[3] | 0,02 |
| MDF-A02-10H | MDF-A02-10L | | | | 1,9 | | | |
| MDF-A02-15H | MDF-A02-15L | | | | 2,3 | | | |
| MDF-A02-20H | | | | | 5 | | | |
| MDF-A02-22H | | | | | 6 | | | |

**Note:** 1) NO means: Normally open valve
2) Membrane operated
3) Max. OPD with liquid is 2,1 MPa, Max. OPD at 85% Ue
4) Min. OPD: values referred to 100% of nominal flow

## DIMENSIONS

*Valve Body - Thread Connection*

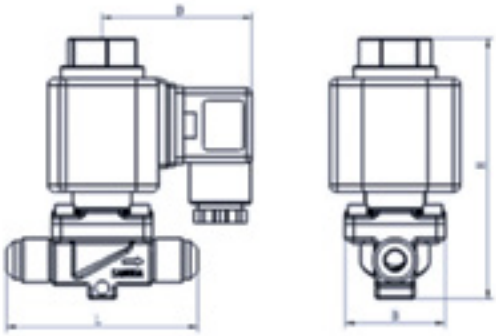

| Model Valve Body | Part Number[1)2)] | SAE Flare Connection [inch] | Kv [m³/h] | PED Category Group 2 | Dimensions [mm] | | | |
|---|---|---|---|---|---|---|---|---|
| | | | | | L | B | D | H |
| MDF-A02-6L 002 | 10125012502 | 3/8 | 0,8 | 4.3 | 69 | 36 | 53 | 95 |
| MDF-A02-6L 004 | 10125012602 | 1/2 | 0,8 | 4.3 | 75 | 36 | 53 | 95 |
| MDF-A02-10L 002 | 10125012902 | 5/8 | 1,9 | 4.3 | 92 | 42 | 53 | 102,5 |
| MDF-A02-10L 004 | 10125013002 | 1/2 | 1,9 | 4.3 | 84 | 42 | 53 | 102,5 |
| MDF-A02-15L 002 | 10125013302 | 5/8 | 2,3 | 4.3 | 104 | 52 | 53 | 107,5 |
| MDF-A02-15L 004 | 10125013402 | 7/8 | 2,3 | 4.3 | 119 | 52 | 53 | 107,5 |

**Note:** 1) Extent of delivery: valve body without coil
2) Available also as industrial package. Contact Sanhua for more details.

# SOLENOID VALVE

## DIMENSIONS

*Valve Body - Solder Connection*

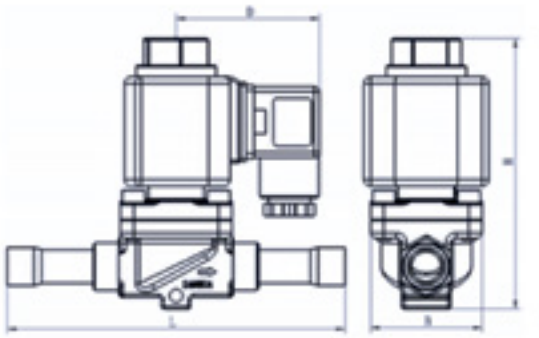

| Model Valve Body | Part Number[1)2)] | Solder Connection ODF | | Kv | PED Category Fluid Group 2 | Dimensions [mm] | | | |
|---|---|---|---|---|---|---|---|---|---|
| | | [inch] | [mm] | [m³/h] | | L | B | D | H |
| MDF-A02-6H 002 | 10125001802 | 3/8 | | 0,8 | 4.3 | 111 | 36 | 53 | 95 |
| MDF-A02-6H 004 | 10125012302 | 1/2 | | 0,8 | 4.3 | 127 | 36 | 53 | 95 |
| MDF-A02-6H 006 | 10125009702 | | 10 | 0,8 | 4.3 | 111 | 36 | 53 | 95 |
| MDF-A02-6H 008 | 10125012402 | | 12 | 0,8 | 4.3 | 127 | 36 | 53 | 95 |
| MDF-A02-10H 002 | 10125012002 | 1/2 | | 1,9 | 4.3 | 127 | 42 | 53 | 102,5 |
| MDF-A02-10H 004 | 10125012702 | 5/8 | 16 | 1,9 | 4.3 | 160 | 42 | 53 | 102,5 |
| MDF-A02-10H 006 | 10125012802 | | 12 | 1,9 | 4.3 | 127 | 42 | 53 | 102,5 |
| MDF-A02-15H 004 | 10125013102 | 7/8 | 22 | 2,3 | 4.3 | 176 | 52 | 53 | 107,5 |
| MDF-A02-15H 006 | 10125013202 | 5/8 | 16 | 2,3 | 4.3 | 176 | 52 | 53 | 107,5 |
| MDF-A02-20H 002 | 10125013502 | 7/8 | 22 | 5 | 4.3 | 191 | 60 | 53 | 124 |
| MDF-A02-20H 004 | 10125013602 | 1-1/8 | | 5 | 4.3 | 214 | 60 | 53 | 124 |
| MDF-A02-20H 008 | 10125013702 | | 28 | 5 | 4.3 | 214 | 60 | 53 | 124 |
| MDF-A02-22H 002 | 10125013802 | 7/8 | 22 | 6 | 4.3 | 281 | 60 | 53 | 124 |
| MDF-A02-22H 004 | 10125013902 | 1-3/8 | 35 | 6 | I | 281 | 60 | 53 | 124 |
| MDF-A02-22H 008 | 10125014002 | 1-1/8 | | 6 | 4.3 | 281 | 60 | 53 | 124 |
| MDF-A02-22H 012 | 10125015202 | | 28 | 6 | 4.3 | 281 | 60 | 53 | 124 |

**Note:** 1) Extent of delivery: valve body without coil
2) Available also as industrial package. Contact Sanhua for more details.

# SOLENOID VALVE

## TECHNICAL PARAMETERS OF COIL

| Model Coil | Part Number[1)] | Plug type[2)] | Supply | Rated Voltage [V] | Power [W] | Voltage Tolerance | Insu-lation Class | Protection Class (w/plug) | UL Approval |
|---|---|---|---|---|---|---|---|---|---|
| MQ-A02024-000001 | 10820004502 | DIN Plug | AC | 24 | 12,5 (50Hz) 10,5 (60Hz) | -15% +10% | F | IP67 | NO |
| MQ-A0211A-000001 | 10820003702 | | | 110 to 120 | | | | | NO |
| MQ-A0222G-000001 | 10820004102 | | | 220 to 240 | | | | | NO |
| MQ-D02012-000001 | 10820006702 | | DC | 12 | 10 | ±10% | | | NO |
| MQ-D02024-000001 | 10820006902 | | | 24 | | | | | NO |

**Note:** 1) Extent of delivery: coil body, fastening screw for the coil body, plug for electrical connection incl. Gaskets and fastening screws
2) Outer cable diameter: 7,1 to 9,7mm and cable core 0,75 to 2,5mm$^2$

## DIMENSIONS - COILS

*MQ-A02 (Coils with DIN Plug):*

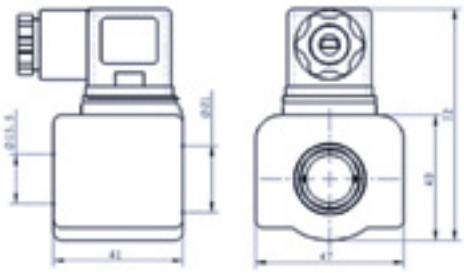

## ACCESSORIES

*Bracket*

| Model[1)] | Part Number | Applicable Valve Models | |
|---|---|---|---|
| | | Solder | Flare |
| MDF-A03-033001 | 20125000902 | MDF-A02-6H | MDF-A02-6L |
| | | MDF-A02-10H | MDF-A02-10L |
| | | MDF-A02-15H | MDF-A02-15L |

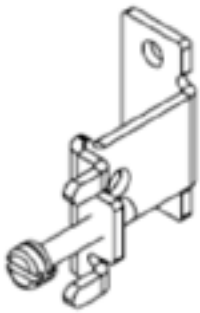

**Note:** 1) Extent of delivery: bracket and screw

## ***MDF-A02 (NO)*** *SERIES*

# SOLENOID VALVE

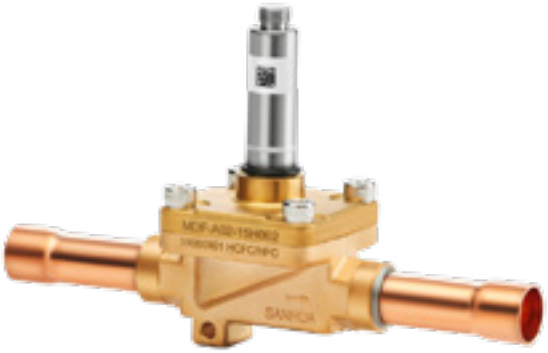

**(GreenTech range:** for fluids GROUP 1 according to Directive 2014/68/EU or GROUP A3/A2L according to ANSI-ASHRAE 34-2016)
MDF-A02 series solenoid valves are normally open (NO) pilot operated solenoid valves, mainly used in refrigerant control of various devices such as refrigerating and freezing systems, air conditioners and heat pumps.

## FEATURES

- COILS: LOW ENERGY CONSUMPTION, RELIABLE
- GREAT VALVE OPENING PERFORMANCE, HIGH MOPD
- COILS ARE DOUBLE SEALED, WATERTIGHT AND SAFE

### GENERAL SPECIFICATIONS[1)]

- Applicable for all common HFC/HFO/HC refrigerants such as: R290, R1234yf, R1234ze(E), R32[2)], R454B, R454C
- Medium temperature: -30°C ~ +105°C
- Ambient temperature: -30°C ~ +55°C
- Relative humidity: 0 to 95%RH
- Installation position:
  - liquid, suction and discharge line
  - preferably coil upwards and flow direction corresponds to the arrow
- Declaration according to LVD and PED

**Note:** 1) MDF series is not suitable for "oil free" systems; customized models for such application are available on request
2) With R32 only respecting MOP 45 bar

# SOLENOID VALVE

## TECHNICAL PARAMETERS OF VALVE BODY

| Valve Body<br>Solder | Usable Coils | Normal position | Actuation | Kv [m³/h] | MOP [Mpa] | Max. OPD [Mpa] | Min. OPD[4] [Mpa] |
|---|---|---|---|---|---|---|---|
| MDF-A02-6H | AC/DC | NO[1] | Pilot[2] | 0,8 | 4,5 | 2,8[3] | 0,02 |
| MDF-A02-10H | | | | 1,9 | | | |
| MDF-A02-15H | | | | 2,3 | | | |
| MDF-A02-20H | | | | 5 | | | |
| MDF-A02-22H | | | | 6 | | | |

**Note:** 1) NO means: Normally open valve
2) Membrane operated
3) Max. OPD with liquid is 2,1 MPa, Max. OPD at 85% Ue
4) Min. OPD: values referred to 100% of nominal flow

# SOLENOID VALVE

## DIMENSIONS

*Valve Body - Solder Connection*

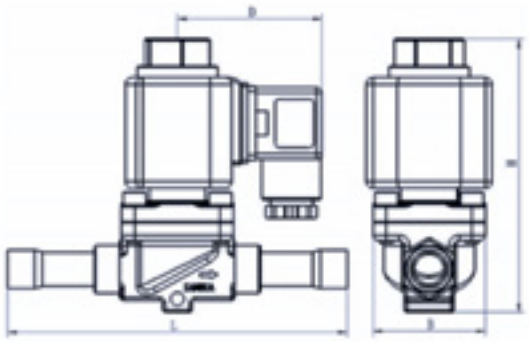

| Model Valve Body | Part Number[1)2)] | Solder Connection ODF | | Kv [m³/h] | PED Category Fluid Group 1 | Dimensions [mm] | | | |
|---|---|---|---|---|---|---|---|---|---|
| | | [inch] | [mm] | | | L | B | D | H |
| MDF-A02-6H 002 | 10125001802 | 3/8 | | 0,8 | 4.3 | 111 | 36 | 53 | 95 |
| MDF-A02-6H 004 | 10125012302 | 1/2 | | 0,8 | 4.3 | 127 | 36 | 53 | 95 |
| MDF-A02-6H 006 | 10125009702 | | 10 | 0,8 | 4.3 | 111 | 36 | 53 | 95 |
| MDF-A02-6H 008 | 10125012402 | | 12 | 0,8 | 4.3 | 127 | 36 | 53 | 95 |
| MDF-A02-10H 002 | 10125012002 | 1/2 | | 1,9 | 4.3 | 127 | 42 | 53 | 102,5 |
| MDF-A02-10H 004 | 10125012702 | 5/8 | 16 | 1,9 | 4.3 | 160 | 42 | 53 | 102,5 |
| MDF-A02-10H 006 | 10125012802 | | 12 | 1,9 | 4.3 | 127 | 42 | 53 | 102,5 |
| MDF-A02-15H 004 | 10125013102 | 7/8 | 22 | 2,3 | 4.3 | 176 | 52 | 53 | 107,5 |
| MDF-A02-15H 006 | 10125013202 | 5/8 | 16 | 2,3 | 4.3 | 176 | 52 | 53 | 107,5 |
| MDF-A02-20H 002 | 10125013502 | 7/8 | 22 | 5 | 4.3 | 191 | 60 | 53 | 124 |
| MDF-A02-20H 004 | 10125013602 | 1-1/8 | | 5 | 4.3 | 214 | 60 | 53 | 124 |
| MDF-A02-20H 008 | 10125013702 | | 28 | 5 | 4.3 | 214 | 60 | 53 | 124 |
| MDF-A02-22H 002 | 10125013802 | 7/8 | 22 | 6 | 4.3 | 281 | 60 | 53 | 124 |
| MDF-A02-22H 008 | 10125014002 | 1-1/8 | | 6 | 4.3 | 281 | 60 | 53 | 124 |
| MDF-A02-22H 012 | 10125015202 | | 28 | 6 | 4.3 | 281 | 60 | 53 | 124 |

**Note:** 1) Extent of delivery: valve body without coil
2) Available also as industrial package. Contact Sanhua for more details.

# SOLENOID VALVE

## TECHNICAL PARAMETERS OF COIL

| Model Coil | Part Number[1)] | Plug type[2)] | Supply | Rated Voltage [V] | Power [W] | Voltage Tolerance | Insu-lation Class | Protection Class (w/plug) | UL Approval |
|---|---|---|---|---|---|---|---|---|---|
| MQ-A02024-000001 | 10820004502 | DIN Plug | AC | 24 | 12,5 (50Hz) 10,5 (60Hz) | -15% +10% | F | IP67 | NO |
| MQ-A0211A-000001 | 10820003702 | | | 110 to 120 | | | | | NO |
| MQ-A0222G-000001 | 10820004102 | | | 220 to 240 | | | | | NO |
| MQ-D02012-000001 | 10820006702 | | DC | 12 | 10 | ±10% | | | NO |
| MQ-D02024-000001 | 10820006902 | | | 24 | | | | | NO |

**Note:** 1) Extent of delivery: coil body, fastening screw for the coil body, plug for electrical connection incl. Gaskets and fastening screws
2) Outer cable diameter: 7,1 to 9,7mm and cable core 0,75 to 2,5mm$^2$

## DIMENSIONS - COILS

*MQ-A02 (Coils with DIN Plug):*

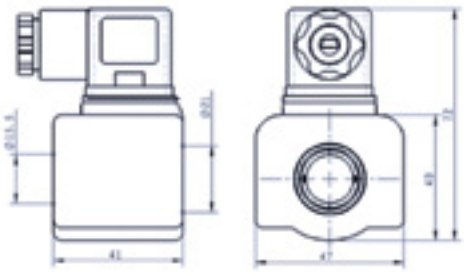

## ACCESSORIES

*Bracket*

| Model[1)] | Part Number | Applicable Valve Models | |
|---|---|---|---|
| | | Solder | Flare |
| MDF-A03-033001 | 20125000902 | MDF-A02-6H | MDF-A02-6L |
| | | MDF-A02-10H | MDF-A02-10L |
| | | MDF-A02-15H | MDF-A02-15L |

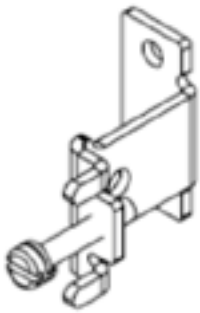

**Note:** 1) Extent of delivery: bracket and screw

## ***MQ-A11*** *SERIES*

# SOLENOID COIL

The special strength of the MQ-A11 coil series is the quick and easy installation. At the same time the product offers outstanding product features and it fulfill additionally the installation requirements of a wide range of applications. Typically are such coils used e.g. in the refrigeration, freezing systems, air conditioning and heat pump industry.
The MQ-A11 coil fits to all MDF-A03 and MDF-B03 solenoid valves.

## FEATURES

- QUICK INSTALLATION VIA TOOLLESS WIRE CONNECTION SYSTEM
- EASY CABLE ENTRY MANAGEMENT DUE TO JAM SCREW CABLE TIGHTENING
- IMPROVED PROTECTION CLASS
- FLEXIBLE AND SOLID CABLES USABLE
- REDUCED ENERGY CONSUMPTION

### TECNHICAL PARAMETERS

| Model Coil[1)] | Part Number[2)] | Rated Voltage [V] | Supply | Power [W] | Frequ. [Hz] | Voltage Tolerance | Insulation Class | Protection class | Outer Cable φ [mm] | Cable core [mm²] |
|---|---|---|---|---|---|---|---|---|---|---|
| MQ-A11 024-000001 | 10820009402 | 24 | AC | 9,5 (50Hz)<br>8,5 (60Hz) | 50/60 | -15% to +10% | F | IP67 | 7,1 to 9,7 | 0,75 to 2,5 |
| MQ-A11 11A-000001 | 10820009202 | 110 to 120 | | 11,5 (50Hz)<br>10,0 (60Hz) | | | | | | |
| MQ-A11 22G-000001 | 10820009002 | 220 to 240 | | 11,0 (50Hz)<br>9,5 (60Hz) | | | | | | |

**Note:** 1) Applicable to MDF-A03 and MDF-B03 valve bodies
2) Extent of delivery: coil body, junction box, gasket, 4x fixing screws, terminal strip and jam screw

# SOLENOID COIL

## DIMENSIONS - COIL

*Coils with junction box (MQ-A11)*

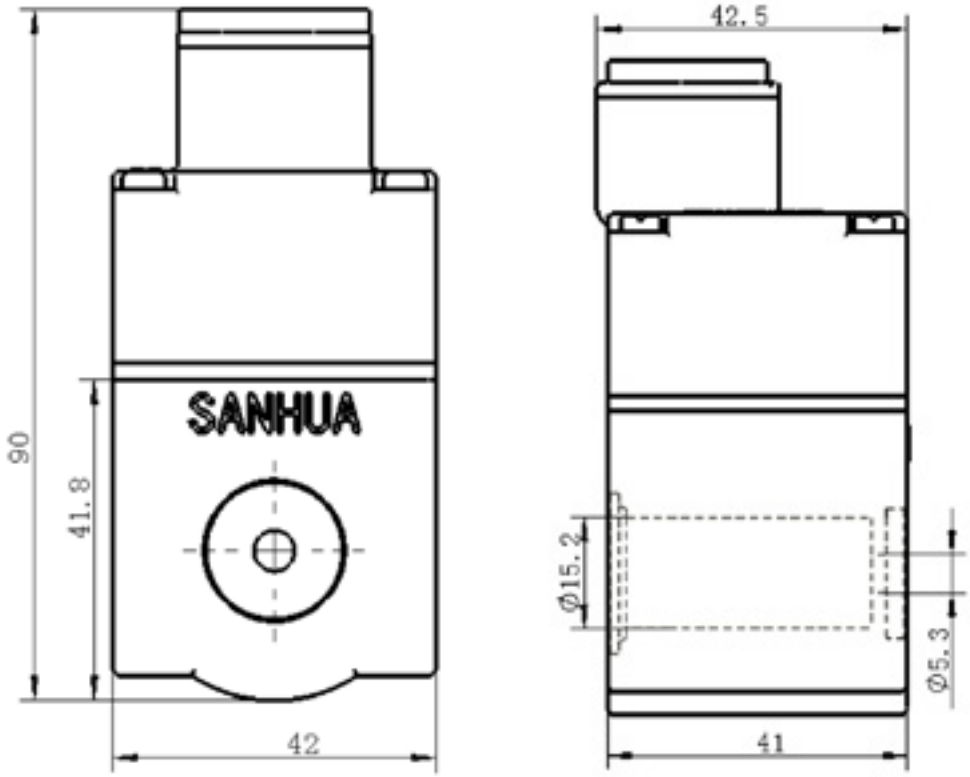

## ***FDF (NC)*** *SERIES*

# SOLENOID VALVE

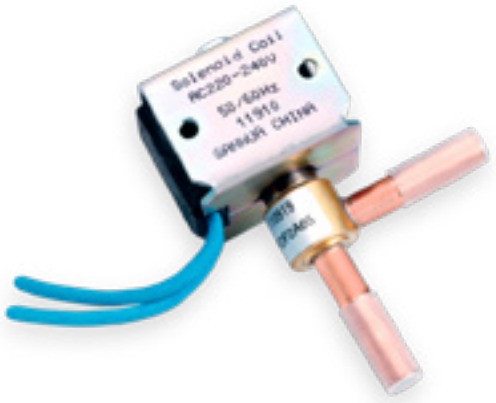

FDF series solenoid valves are direct operated or pilot operated solenoid valves, mainly used in refrigerant control of various devices such as refrigerating and freezing systems, air conditioners and heat pumps.

## FEATURES

- COILS: LOW ENERGY CONSUMPTION, RELIABLE
- GREAT VALVE OPENING PERFORMANCE, HIGH MOPD

### GENERAL SPECIFICATIONS

- Applicable for all common HCFC, HFC, HFO, HC refrigerants.
  - fluids GROUP 2 (according to Directive 2014/68/EU) or GROUP A1 (according to ANSI-ASHRAE 34-2016): R22, R134a, R404A, R410A, R507, R407C, R407A/F, R448A/R449A, R452A, R450A/R513A
  - fluids GROUP 1 (according to Directive 2014/68/EU) or GROUP A3/A2L (according to ANSI-ASHRAE 34-2016): R290, R1234yf, R1234ze(E), R32, R447A, R452B, R454B, R454C, R600a
- Medium temperature TS min./max.: -30°C / 120°C
- Ambient temperature min./max.: -30°C / +50°C
- Relative humidity: 0 to 95% RH
- Installation position: - Liquid, suction and discharge line
  - Coil upwards, coil axis ± 15° tolerance versus vertical axis
  - Flow direction corresponds to the arrow
- Declarations/Certification/Approvals:
  DoC acc. PED (2014/68/EU), LVD (2014/35/EU), RoHS (2011/65/EU), REACH, Pressure Equipment (Safety) Regulation 2016 (2016/1105), Electrical Equipment (Safety) Regulation 2016 (2016/1101), EN60335-2-24/40/89 for flammable refrigerants (together with coil FQ-A05 22G-001022 VDE certification acc. EN60335-2-24/40/89 for flammable refrigerants)

### TECHNICAL PARAMETERS OF VALVE BODY

| Model Valve Body | Product Number | Normal Position | Actuation | Ø Seat | Kv | MOP | Max. OPD | Min. OPD | Ød OD | Ød OD | Measurement [mm] | | |
|---|---|---|---|---|---|---|---|---|---|---|---|---|---|
| | | | | [mm] | [m³/h] | [MPa] | [MPa] | [MPa] | [mm] | [inch] | L | L1 | L2 |
| FDF 2A 94 | 10120019802 | NC | Direct | 1,9 | 0,08 | 4,5 | 3,4 | 0 | 6,35 | 1/4 | 66,5 | 32 | 34 |
| FDF 2.5A 08 | 10120021102 | | Pilot | 2,5 | 0,21 | | 2,1 | 0,01 | 6,35 | 1/4 | 84,6 | 37,5 | 38 |
| FDF 3A 08 | 10120019302 | | | 2,7 | 0,26 | | 3,4 | | 7,94 | 5/16 | 81,4 | 34,5 | 35,7 |
| FDF 4A 10 | 10120025302 | | | 4,0 | 0,30 | | 2,8 | 0 | 6,35 | 1/4 | 81,2 | 35,3 | 37,8 |
| FDF 6A 58 | 10120018702 | | | 5,8 | 0,56 | | 3,4 | 0,01 | 7,94 | 5/16 | 81,6 | 34,5 | 35,7 |
| FDF 11A 14 | 10120020402 | | | 11 | 2,40 | | 2,8 | 0,02 | 12,7 | 1/2 | 117,5 | 62 | 62 |
| FDF 13A08 | 10120026402 | | | 13 | 3,5 | | | | 15,88 | 5/8 | 117,5 | 62 | 62 |

**Note:** 1) New model with stainless steel body (lead free)

# SOLENOID VALVE

## DIMENSIONS - VALVE BODY

*FDF 2A ... FDF 6A*

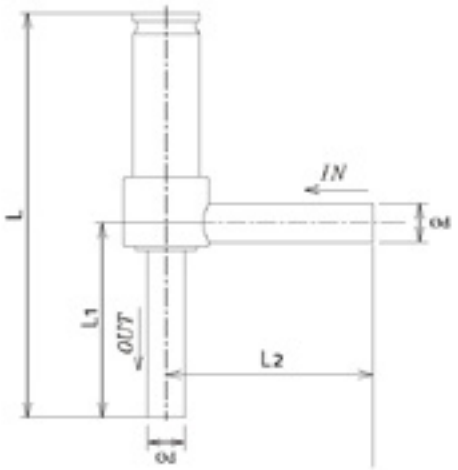


*FDF 11A ... FDF 13A*

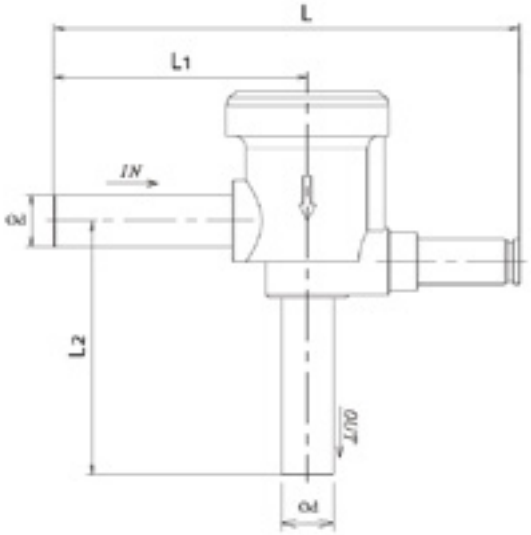


## TECNHICAL PARAMETERS OF COIL

| Model Coil | Product Number | Rated Voltage [V] | Supply | Power [1)] [W] | Freq. [Hz] | Voltage Tolerance | Insulation Class | Wiring type: flying leads [mm] |
|---|---|---|---|---|---|---|---|---|
| FQ-A05 024-000709 | 10800072302 | 24 | AC | 5 (50Hz)<br>4,5 (60Hz) | 50/60 | -15%<br>+10% | B | 1800±50 |
| FQ-A05 120-001098 | 10800062002 | 110 to 120 | | 5 (50Hz)<br>4,5 (60Hz) | | | | 800±30 |
| FQ-A05 22G-001022 | 10800057302 | 220 to 240 | | 5 (50Hz)<br>4,5 (60Hz) | | | | 600±20 |

**Note:** 1) FQ-A0522G power consumption based on 240V; FQ-A05120 power consumption based on 120V

## DIMENSIONS - COIL

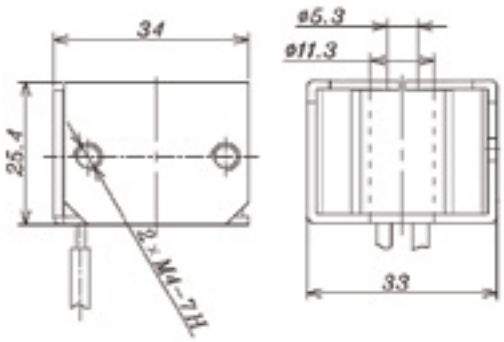

## ***FDF2AK (NO)*** *SERIES*

# SOLENOID VALVE

FDF2AK series solenoid valves are direct operated, normally open solenoid valves, mainly used in refrigerant control of various devices such as refrigerating and freezing systems, air conditioners and heat pumps.

## FEATURES

- COMPACT DESIGN
- LOW ENERGY CONSUMPTION
- EXCELLENT OPERATION PERFORMANCE

### GENERAL SPECIFICATIONS

- Applicable for all common HCFC, HFC, HFO, HC refrigerants:
  - fluids GROUP 2 (according to Directive 2014/68/EU) or GROUP A1 (according to ANSI-ASHRAE 34-2016): R134a, R404A, R410A, R507, R407C, R407A/F, R448A/R449A, R452A, R450A/R513A
  - fluids GROUP 1 (according to Directive 2014/68/EU) or GROUP A3/A2L (according to ANSI-ASHRAE 34-2016): R290, R1234yf, R1234ze(E), R32, R447A, R452B, R454B, R454C, R600a
- Medium temperature TS min./max.: -30°C / 120°C
- Ambient temperature: -30°C / +50°C
- Relative humidity: 0 to 95% RH
- Installation position:
  - Liquid, suction and discharge line
  - Coil upwards, coil axis ±15° tolerance versus vertical axis
  - Flow direction corresponds to the arrow
- Declarations/Certification/Approvals:
  DoC acc. PED (2014/68/EU), LVD (2014/35/EU), RoHS (2011/65/EU), REACH
  DoC acc. EN60335-2-24/40/89 for flammable refrigerants

### TECHNICAL PARAMETERS OF VALVE BODY

| Valve Body Model | Part Number* | Normal Position | Actuation | Ø Seat [mm] | Kv [m³/h] | MOP [MPa] | Max. OPD [MPa] | Min. OPD [MPa] | Connection OD Ød | |
|---|---|---|---|---|---|---|---|---|---|---|
| | | | | | | | | | [mm] | [inch] |
| FDF2AK19 | 10120047402 | NO | Direct | 1,8 | 0,05 | 4,5 | 2,1 | 0 | 6,35 ±0,1 | 1/4 |
| FDF2AK22 | 10120055502 | | | 1,9 | 0,08 | 4,5 | 1,5 | | | |

* Available also as industrial package. Contact Sanhua for more details.

# SOLENOID VALVE

## DIMENSIONS - VALVE BODY

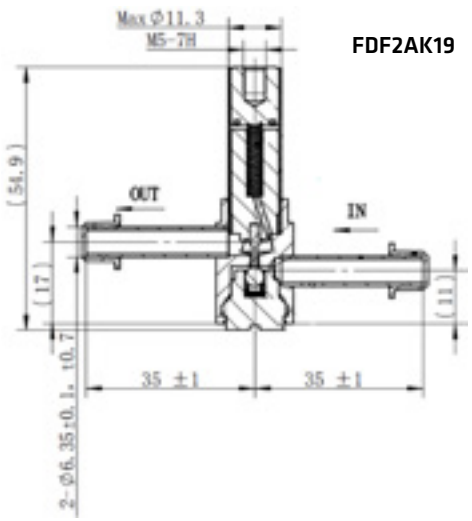


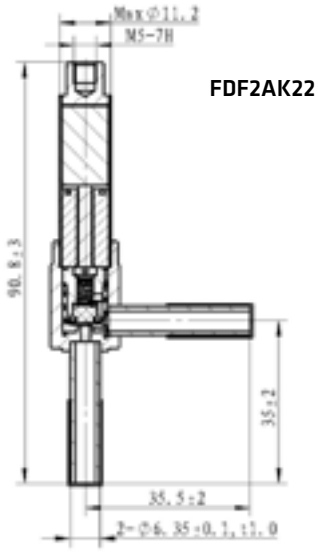


## TECNHICAL PARAMETERS OF COIL

| Coil Model | Part Number* | Rated Voltage [V] | Supply | Power[3] [W] | Used for | Freq. [Hz] | Voltage Tolerance | Insulation Class | Wiring type |
|---|---|---|---|---|---|---|---|---|---|
| FQ-A05024-000709 | 10800072302 | 24 | AC | 5 (50Hz)<br>4,5 (60Hz) | FDF2AK01[1] | 50/60 | -15%<br>+10% | B | 1800±50 |
| FQ-A05120-001098 | 10800062002 | 110 to 120 | | 5 (50Hz)<br>4,5 (60Hz) | | | | | 800±30 |
| FQ-A0522G-001022 | 10800057302 | 220 to 240 | | 5 (50Hz)<br>4,5 (60Hz) | | | | | 600±20 |
| FQ-A0522G-001066 | 10800060102 | 220 to 240 | | 6,5 (50Hz)<br>5 (60Hz) | FDF2AK22[2] | | | | 2000±50 |

**Note:** * Available also as industrial package. Contact Sanhua for more details.
1) Dimensions: drawing 1
2) Dimensions: drawing 2
3) Power consumption based on 220V

## DIMENSIONS - COIL

**Drawing 1:** FQ-A05024-000709, FQ-A05120-001098, FQ-A0522G-001022

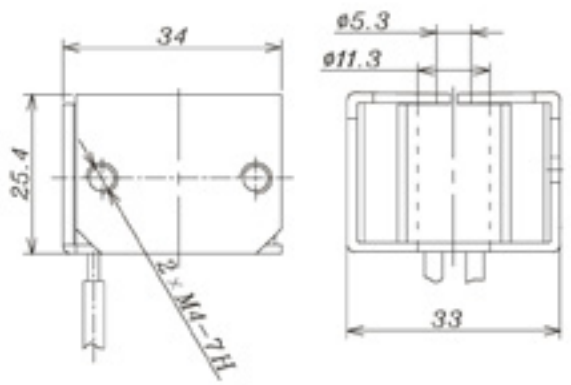


**Drawing 2:** FQ-A0522G-001066

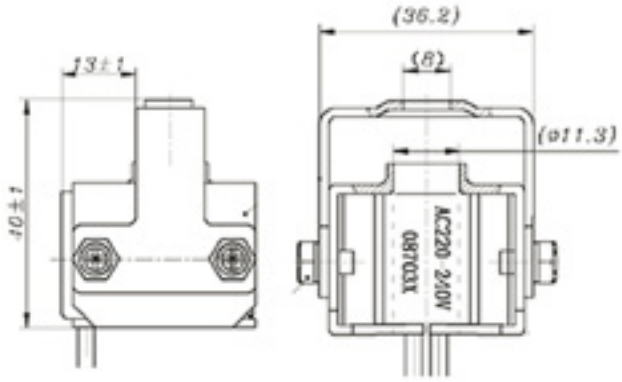

## ***FDF-G (NC)*** *SERIES*

# SOLENOID VALVE

FDF-G solenoid valves is lead-free stainless-steel series of FDF valves, with direct or pilot operating type, mainly used in refrigeration, air conditioning and heat pump system refrigerant control.

## FEATURES

- STAINLESS STEEL BODY REALIZES LEAD-FREE APPROACH - ENVIRONMENTALLY FRIENDLY
- DUE TO FURNACE BRAZING PROCESS IMPROVED PRODUCT RELIABILITY AND CONSISTENCE
- IMPROVED RESISTANCE TO IMPURITIES

### GENERAL SPECIFICATIONS

- Applicable for all common HCFC, HFC, HFO refrigerants (for oil system applications please contact Sanhua)
  - fluids GROUP 2 (according to Directive 2014/68/EU) or GROUP A1 (according to ANSI-ASHRAE 34-2016): R134a, R404A, R410A, R507, R407C, R407A/F, R448A/R449A, R452A, R450A/R513A.
  - for fluids GROUP 1 (according to Directive 2014/68/EU) or GROUP A3/A2L (according to ANSI-ASHRAE 34-2016): R290, R1234yf, R1234ze(E), R32, R447A, R452B, R454B, R454C, R600a.
- Medium temperature TS min./max.: -30°C / +120°C
- Ambient temperature min./max.: -30°C / +50°C
- Relative humidity: 0 to 95% RH
- Installation position:
  - Liquid, suction and discharge line
  - Coil upwards, coil axis ±15° tolerance versus vertical axis
  - Flow direction corresponds to the arrow
- Declarations/Certification/Approvals:
  DoC acc. PED (2014/68/EU), LVD (2014/35/EU), RoHS (2011/65/EU), REACH, Pressure Equipment (Safety) Regulation 2016 (2016/1105), Electrical Equipment (Safety) Regulation 2016 (2016/1101), EN60335-24/40/89.

# SOLENOID VALVE

## TECHNICAL PARAMETERS OF VALVE BODY

| Model Valve Body | Product Number | Normal Position | Actuation | Kv | MOP | Max. OPD[1] | Min. OPD | Ød OD (inlet) | Ød OD (outlet) | Measurement [mm] | | |
|---|---|---|---|---|---|---|---|---|---|---|---|---|
| | | | | [m³/h] | [MPa] | [MPa] | [kPa] | [mm] | [inch] | L | L1 | L2 |
| FDF2AG01 | 10119001002 | NC | Direct | 0,08 | 4,5 | 3,4 | 0 | 1/4 | 1/4 | 66,6 | 33,3 | 33,0 |
| FDF3AG01 | FDFX0000202 | | Pilot | 0,3 | | 3,4 | 5 | 5/16 | 5/16 | 77,7 | 34,5 | 35,4 |
| FDF4AG200 | FDFX0000102 | | | 0,43 | | 3,0 | 0 | 5/16 | 5/16 | 77,7 | 34,5 | 35,4 |
| FDF6AG01 | 10120052102 | | | 0,56 | | 3,4 | 5 | 5/16 | 5/16 | 77,7 | 34,5 | 35,5 |
| FDF8AG01 | FDFX0001502 | | | 0,95 | | 3,1 | 7 | 3/8 | 3/8 | 88,4 | 41,0 | 43,3 |
| FDF11AG01 | FDFX0001602 | | | 2,58 | | 2,8 | 7 | 1/2 | 1/2 | 118 | 60,0 | 60,0 |
| FDF13AG01 | FDFX0001702 | | | 3,45 | | 2,8 | 7 | 5/8 | 5/8 | 117,3 | 60,0 | 60,0 |

**Note:** 1) Maximum operating pressure difference was measured with coil FQ-A0522G (220-240 V AC) with gas phase

## TECNHICAL PARAMETERS OF COIL

| Model Coil | Product Number | Rated Voltage | Supply | Power[1] | Freq. | Voltage Tolerance | Insulation Class | Wiring type: flying leads |
|---|---|---|---|---|---|---|---|---|
| | | [V] | | [W] | [Hz] | | | [mm] |
| FQ-A05 024-000709 | 10800072302 | 24 | AC | 5 (50Hz)<br>4,5 (60Hz) | 50/60 | -15%<br>+10% | B | 1800±50 |
| FQ-A05 120-001098 | 10800062002 | 110 to 120 | | 5 (50Hz)<br>4,5 (60Hz) | | | | 800±30 |
| FQ-A05 22G-001022 | 10800057302 | 220 to 240 | | 5 (50Hz)<br>4,5 (60Hz) | | | | 600±20 |

**Note:** 1) FQ-A0522G power consumption based on 240V;
FQ-A05120 power consumption based on 120V

**OUT**

# SOLENOID VALVE

## DIMENSIONS - VALVE BODY

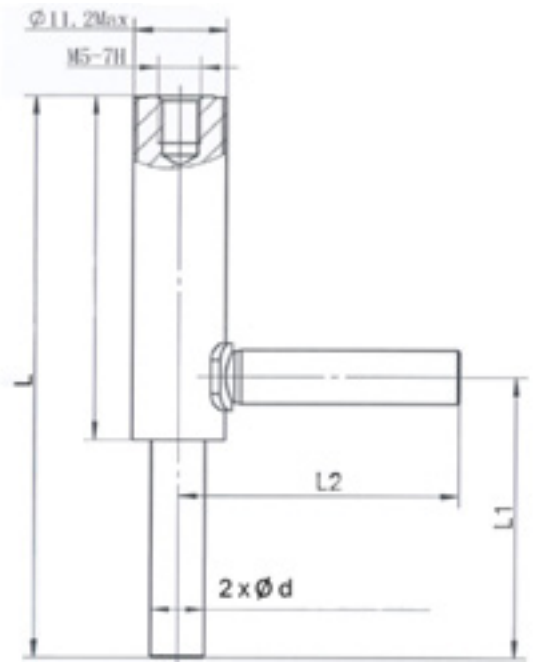


**FDF2AG-FDF6AG**

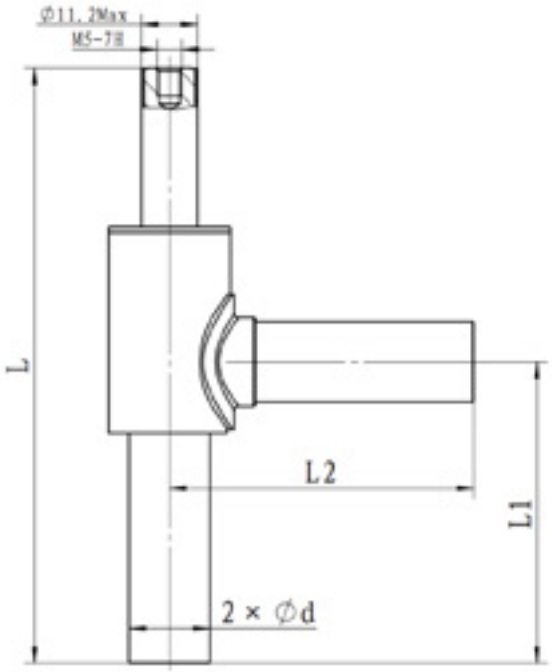


**FDF8AG-FDF13AG**

## DIMENSIONS - COIL (FQ-A05)

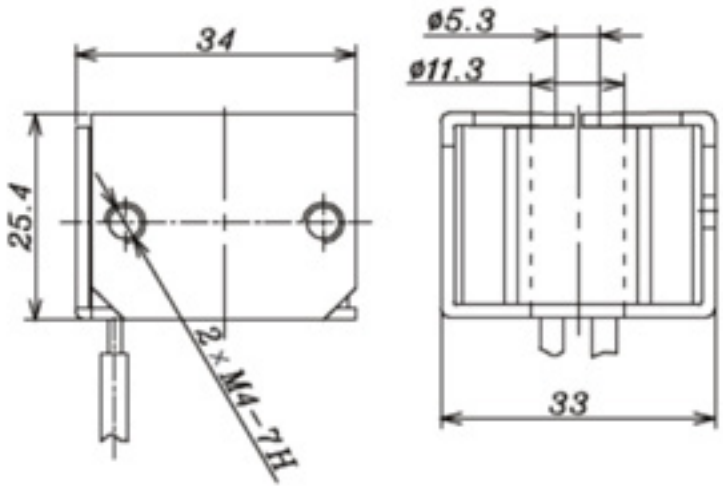

## ***LDF*** *SERIES*

# SOLENOID VALVE

**(GreenTech range:** aplicapable for fluids GROUP 1 and GROUP 2 according to Directive 2014/68/EU or GROUP A3/A2L and GROUP A1 according to ANSI-ASHRAE 34-2016)

LDF series solenoid valves are direct operated or pilot operated solenoid valves, mainly used in refrigerant control of various devices such as refrigerating and freezing systems, air conditioners and heat pumps.

## FEATURES

- COILS: LOW ENERGY CONSUMPTION, RELIABLE
- LOW INTERNAL LEAKAGE
- COMPACT DESIGN, EASY TO INSTALL.

### GENERAL SPECIFICATIONS

- Applicable for all common HFC/HFO/HC refrigerants such as: R134a, R404A, R407A/F, R407C, R410A, R448A, R449A, R450A, R452A, R513A, R507A, R290, R1234yf, R1234ze(E), R32[1)], R447A, R452B, R454B, R454C
- Medium temperature TS min./max.: -30°C/+120°C
- Ambient temperature min./max.: -30°C /+50°C
- Relative humidity:0 to 95%RH
- Max. operating pressure PS: 4.5Mpa
- Installation position:
  - Liquid, suction and discharge line
  - Coil upwards, coil axis ±15° to tolerance versus vertical axis
  - Flow direction corresponds to the arrow
- Declaration according to LVD or PED, UL approval

**Note:** 1) With R32 only respecting MOP 45 bar

# SOLENOID VALVE

## TECHNICAL PARAMETERS OF VALVE BODY

| Model Valve Body | Part Number | Normal Position | Actuation | Ø Seat [mm] | Kv [mm] | MOP [MPa] | OPD [MPa] | | Ød ODM [inch] |
|---|---|---|---|---|---|---|---|---|---|
| | | | | | | | Max | Min | L2 |
| LDF2A01 | 10127000102 | NC | Direct | 2 | 0.12 | 4.5 | 3.1 | 0 | 1/4 |
| LDF2A02 | 10127000402 | | | 2 | 0.12 | 4.5 | 3.1 | 0 | 1/4 |
| LDF3A08 | 10127001802 | | Pilot | 3 | 0.26 | 4.5 | 3.1 | 0.005 | 1/4 |
| LDF4A08 | 10127001102 | | | 4 | 0.3 | 4.5 | 3.1 | 0.005 | 1/4 |
| LDF6A08 | 10127001202 | | | 5.8 | 0.6 | 4.5 | 3.1 | 0.005 | 5/16 |
| LDF8A01 | 10127000502 | | | 8 | 0.9 | 4.5 | 3.1 | 0.005 | 3/8 |
| LDF8A02 | 10127000602 | | | 8 | 1.1 | 4.5 | 3.1 | 0.005 | 3/8 |

| Model Valve Body | Ød ODM [inch] | Dimensions | | | Drawings number |
|---|---|---|---|---|---|
| | | L | L1 | L2 | |
| LDF2A01 | 1/4 | 51,6 | 40 | 39,5 | 2 |
| LDF2A02 | 1/4 | 79,6 | 38,5 | 40 | 1 |
| LDF3A08 | 1/4 | 91 | 45,8 | 46,7 | 1 |
| LDF4A08 | 1/4 | 91 | 45 | 46 | 1 |
| LDF6A08 | 5/16 | 95 | 48,5 | 49 | 1 |
| LDF8A01 | 3/8 | 67 | 71 | 71 | 2 |
| LDF8A02 | 3/8 | 120,7 | 69,5 | 71 | 1 |

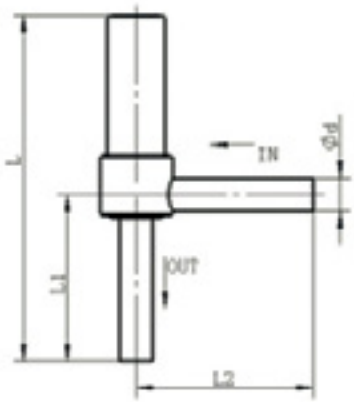


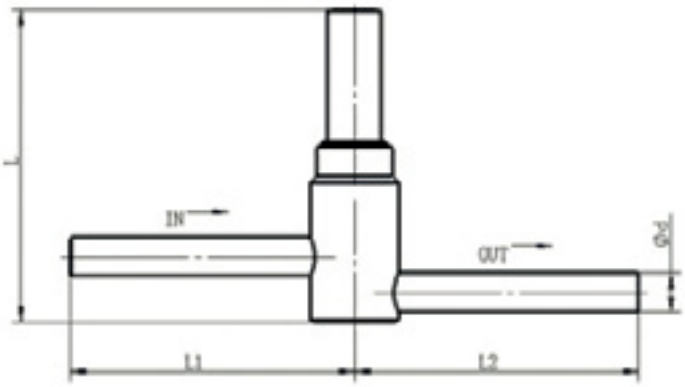

# SOLENOID VALVE

## TECHNICAL PARAMETERS OF COIL

| Model Coil | Rated voltage [V] | Power [W] | Voltage Tolerance | Insulation Class | Wiring type | Cable length, [mm] | Part Number |
|---|---|---|---|---|---|---|---|
| FQ-A05 024-000709 | AC 24 | 5 (50Hz)<br>4,5 (60Hz) | +10%<br>-15% | B | Lead Wires | 1800 | 10800072302 |
| FQ-A05 120-001098 | AC 120 | 5 (50Hz)<br>4,5 (60Hz) | | | | 800 | 10800062002 |
| FQ-A05 22G-001022 | AC 220-240 | 5 (50Hz)<br>4,5 (60Hz) | | | | 600 | 10800057302 |

## DIMENSIONS - COIL

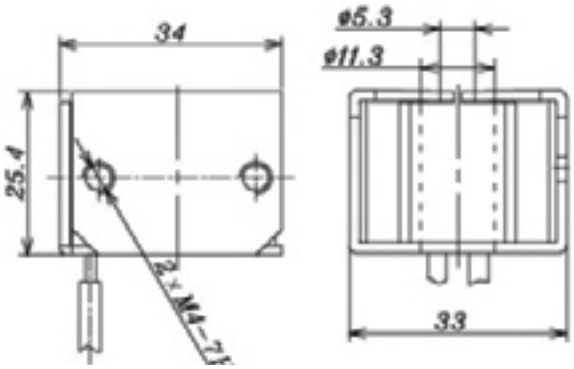

# THINK GLOBALLY ACT LOCALLY

SANHUA

# THERMOSTATIC EXPANSION VALVES

*FLEXIBILITY OF CHOICE*
*INCREASED MECHANICAL STRENGTH*

SANHUA

*"Yearly SANHUA supplies over 40 million thermostatic and electronic expansion valves to the HVAC&R and Automotive industries worldwide."*

*DISCOVER WHY*
**sanhuaeurope.com**

***RFKH*** *SERIES*

# THERMOSTATIC EXPANSION VALVE

RFKH series thermostatic expansion valves are used to adjust mass flow of refrigerant into the evaporator while controlling the refrigerant´s superheat at the outlet of the evaporator. They can be used for various refrigerants under all working conditions. Typical applications are refrigeration systems like freezers, ice makers, dehumidifiers as well as air conditioners and heat pumps at various evaporation temperature ranges.

## FEATURES

- STAINLESS STEEL CAPILLARY AND SENSING BULB
- EXCHANGEABLE VALVE ORIFICE, EASY TO STOCK HOLDING, CONVENIENT FOR CAPACITY MATCH AND REPAIR
- THERMAL BULB UTILIZES CROSS CHARGE TECHNOLOGY, PROVIDING CONSISTENT SUPERHEAT DEGREE OVER THE WHOLE EVAPORATION TEMPERATURE RANGE
- VALVES WITH MOP FUNCTION CAN BE PROVIDED TO ASSURE RELIABLE COMPRESSOR OPERATION
- APPLICABLE IN A WIDE EVAPORATION TEMPERATURE RANGE
- RELIABLE AND CONSISTENT PERFORMANCE OF SUPERHEAT CONTROL

### GENERAL SPECIFICATIONS

- Applicable for all common HCFC and HFC refrigerants such as: R22, R407C, R404A, R507, R134a, R404A, R410A, R407A, R407F, R448A/R449A, R452A, R450A/R513A, R455A, R454C
- Ambient temperature min./max.: -35°C / +55°C
- Medium temperature TS min./max.: -40°C / +70°C extended to -60°C / +70°C for range B models
- Max. operating pressure PS: 4.6 MPa (46 bar)
- Installation position:
  - Preferably valve head upwards
  - Flow direction from inlet A to outlet B
- Certifications: UL/CSA and PED declaration

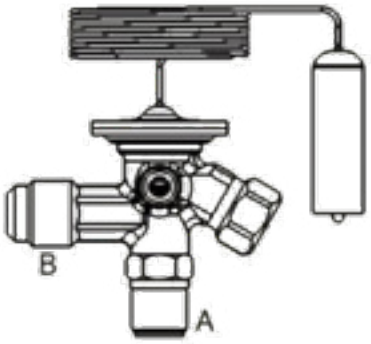

# THERMOSTATIC EXPANSION VALVE

## TECHNICAL PARAMETERS

- RFKH series angle shape valve
- Inlet 3/8" flare connection
- Capillary tube length 1,5m
- Equalization port:
  - RFKH flare/flare type with ¼" flare connection;
  - RFKH flare/solder type with ¼" or 6mm solder connection

## MODEL DESIGNATION LEGEND

| Position Number | Model Designation Legend | |
|---|---|---|
| 1 | **Product Code** | **Product Series** |
| | RFKH | Thermostatic expansion valve |
| 2 | **Refrigerant** | **Description** |
| | 01 | R22 |
| | 02 | R407C |
| | 03 | R404A / R507A |
| | 04 | R134a |
| | 05 | R410A |
| | 07 | R407A / R407F |
| | 08 | R448A / R449A |
| | 10 | R450A |
| | 11 | R452A |
| | 14 | R513A |
| | 20 | R455A / R454C |
| 3 | **Pressure Equalization** | **Description** |
| | E | External pressure equalization |
| | (Omitted) | Internal pressure equalization |
| 4 | **Miscellaneous** | **Description** |
| | xxxxA | Digits for additional information |

# THERMOSTATIC EXPANSION VALVE

## MODEL DESIGNATION EXAMPLE

| Position Number | | | | | According to Model Designation Legend |
|---|---|---|---|---|---|
| 1 | 2 | 3 | 4 | 5 | |
| **RFKH** | 01 | E | xxx | xxxA | Thermostatic expansion valve |
| RFKH | **01** | E | xxx | xxxA | Refrigerant R22 |
| RFKH | 01 | **E** | xxx | xxxA | Connection for external pressure equalization |
| RFKH | 01 | E | **xxx** | xxxA | Nominal Capacity (in USRT) |
| RFKH | 01 | E | xxx | **xxxA** | Digits for additional information |

## MODELS DESIGNATION (VALVE HEAD)

| Code | Description |
|---|---|
| KH01-6.0-26A | Part number |
| -40/10°C | Evaporating temperature (°C) |
| -40/+50°F | Evaporating temperature (°F) |
| R22/R407C | Refrigerant |
| MWP 4.6Mpa | Max. Working pressure (MPa) |
| MWP 665psig | Evaporating temperature (Psig) |

## MODELS WITH MOP FUNCTION

*RFKH valves can be selected with MOP (Max. Operating Pressure) function.*
*MOP protects the compressor motor against excessive evaporating pressure during normal operation.*

| Refrigerant | Range N (-40°C to +10°C) | Range NM (-40°C to -5°C) | Range NL (-40°C to -15°C) | Range B (-60°C to -25°C) |
|---|---|---|---|---|
| | MOP = +15°C | MOP = 0°C | MOP = -10°C | MOP = -20°C |
| R22 | 6,9 barg - STD | 4,0 barg – O.R. | 2,5 barg - STD | N.A. |
| R407C | 6,6 barg - STD | N.A. | N.A. | N.A. |
| R404A / R507 | 8,4 barg - STD | 5,0 barg – O.R. | 3,3 barg - STD | 2,0 barg - STD |
| R134a | 3,9 barg - STD | 1,9 barg – O.R. | 1,0 barg – O.R. | N.A. |
| R410A | 11,5 barg - STD | 7,0 barg – O.R. | 4,7 barg - STD | N.A. |
| R407A / R407F | 7,9 barg - STD | N.A. | N.A. | N.A. |
| R448A / R449A | 7,3 barg - O.R. | 4,2 barg – O.R. | 2,6 barg - STD | 1,5 barg - O.R. |
| R450A | 3,2 barg - O.R. | 1,5 barg – O.R. | 0,7 barg - O.R. | N.A. |
| R452A | 8,0 barg - O.R. | 4,6 barg – O.R. | 3,0 barg - STD | 1,7 barg - STD |
| R513A | 4,3 barg - O.R. | 2,3 barg – O.R. | 1,3 barg - O.R. | N.A. |
| R455A | 6,8 barg - O.R. | 3,8 barg – O.R. | 2,4 barg - O.R. | N.A. |
| R454C | 6,3 barg - O.R. | 3,5 barg – O.R. | 2,2 barg - O.R. | N.A. |

**Note:** STD : Standard product
O.R. : On Request
N.A. : Not Available

# THERMOSTATIC EXPANSION VALVE

## TECHNICAL PARAMETERS

*Tab. A : Models with Range N : Temperature Range from -40°C to +10°C [ without MOP ]*

| Ref. | Model Valve Body | Part Number[1 & 4)] | Connection type | Inlet ØA | Outlet ØB | | | Ext. ØC | | |
|---|---|---|---|---|---|---|---|---|---|---|
| | | | In / Out / Ext. Pressure Equal. | Flare | Flare | Solder | | Flare | Solder | Solder |
| | | | | [inch] | [inch] | [mm] | [inch] | [inch] | [inch] | [mm] |
| R22 | RFKH01-6.0-22A | 10201028802 | flare / flare | 3/8 | 1/2 | - | - | - | - | - |
| | RFKH01E-6.0-13A | 10201028902 | flare / flare / flare | | 1/2 | - | - | 1/4 | - | - |
| | RFKH01-6.0-26A | 10201029202 | flare / solder | | - | 12 | - | - | - | - |
| | RFKH01E-6.0-06A | 10201033302 | flare / solder / solder | | - | 12 | - | - | - | 6 |
| | RFKH01-6.0-07A | 10201029102 | flare / solder | | - | - | 1/2 | - | - | - |
| | RFKH01E-6.0-08A | 10201029002 | flare / solder / solder | | - | - | 1/2 | - | 1/4 | - |
| R407C | RFKH02-6.3-24A | 10201037902 | flare / flare | 3/8 | 1/2 | - | - | - | - | - |
| | RFKH02E-6.3-20A | 10201040002 | flare / flare / flare | | 1/2 | - | - | 1/4 | - | - |
| | RFKH02-6.3-27A | 10201029302 | flare / solder | | - | 12 | - | - | - | - |
| | RFKH02E-6.3-28A | 10201033602 | flare / solder / solder | | - | 12 | - | - | - | 6 |
| | RFKH02-6.3-32A | 10201029402 | flare / solder | | - | - | 1/2 | - | - | - |
| | RFKH02E-6.3-18A | 10201033502 | flare / solder / solder | | - | - | 1/2 | - | 1/4 | - |
| R404A / R507A | RFKH03-4.8-21A | 10201028402 | flare / flare | 3/8 | 1/2 | - | - | - | - | - |
| | RFKH03E-4.8-15A | 10201028502 | flare / flare / flare | | 1/2 | - | - | 1/4 | - | - |
| | RFKH03-4.8-03A | 10201029702 | flare / solder | | - | 12 | - | - | - | - |
| | RFKH03E-4.8-02A | 10201033902 | flare / solder / solder | | - | 12 | - | - | - | 6 |
| | RFKH03-4.8-09A | 10201028702 | flare / solder | | - | - | 1/2 | - | - | - |
| | RFKH03E-4.8-10A | 10201027402 | flare / solder / solder | | - | - | 1/2 | - | 1/4 | - |
| R134a | RFKH04-2.9-23A | 10201038502 | flare / flare | 3/8 | 1/2 | - | - | - | - | - |
| | RFKH04E-2.9-19A | 10201040602 | flare / flare / flare | | 1/2 | - | - | 1/4 | - | - |
| | RFKH04-2.9-29A | 10201030702 | flare / solder | | - | 12 | - | - | - | - |
| | RFKH04E-2.9-17A | 10201035202 | flare / solder / solder | | - | 12 | - | - | - | 6 |
| | RFKH04-2.9-30A | 10201030802 | flare / solder | | - | - | 1/2 | - | - | - |
| | RFKH04E-2.9-31A | 10201035302 | flare / solder / solder | | - | - | 1/2 | - | - | 1/4 |
| R410A | RFKH05-7.6-66A | 10201028002 | flare / flare | 3/8 | 1/2 | - | - | - | - | - |
| | RFKH05E-7.6-33A | 10201028302 | flare / flare / flare | | 1/2 | - | - | 1/4 | - | - |
| | RFKH05-7.6-37A | 10201031002 | flare / solder | | - | 12 | - | - | - | - |
| | RFKH05E-7.6-36A | 10201035502 | flare / solder / solder | | - | 12 | - | - | - | 6 |
| | RFKH05-7.6-35A | 10201028102 | flare / solder | | - | - | 1/2 | - | - | - |
| | RFKH05E-7.6-34A | 10201028202 | flare / solder / solder | | - | - | 1/2 | - | - | 1/4 |
| R407A / R407F | RFKH07-6.0-43A | 10201038702 | flare / flare | 3/8 | 1/2 | - | - | - | - | - |
| | RFKH07E-6.0-42A | 10201040902 | flare / flare / flare | | 1/2 | - | - | 1/4 | - | - |
| | RFKH07-6.0-44A | 10201046402 | flare / solder | | - | 12 | - | - | - | - |
| | RFKH07E-6.0-41A | 10201035702 | flare / solder / solder | | - | 12 | - | - | - | 6 |
| | RFKH07-6.0-45A | 10201031102 | flare / solder | | - | - | 1/2 | - | - | - |
| | RFKH07E-6.0-46A | 10201035802 | flare / solder / solder | | - | - | 1/2 | - | - | 1/4 |

# THERMOSTATIC EXPANSION VALVE

## TECHNICAL PARAMETERS

*Tab. A : Models with Range N : Temperature Range from -40°C to +10°C [ without MOP ]*

| Ref. | Model Valve Body | Part Number[1 & 4)] | Connection type | Inlet ØA | Outlet ØB | | | Ext. ØC | | |
|---|---|---|---|---|---|---|---|---|---|---|
| | | | In / Out / Ext. Pressure Equal. | Flare | Flare | Solder | | Flare | Solder | Solder |
| | | | | [inch] | [inch] | [mm] | [inch] | [inch] | [inch] | [mm] |
| R448A / R449A | RFKH08-6.1-49A | 10201038802 | flare / flare | 3/8 | 1/2 | - | - | - | - | - |
| | RFKH08E-6.1-48A | 10201041002 | flare / flare / flare | | 1/2 | - | - | 1/4 | - | - |
| | RFKH08-6.1-50A | 10201031202 | flare / solder | | - | 12 | - | - | - | - |
| | RFKH08E-6.1-47A | 10201035902 | flare / solder / solder | | - | 12 | - | - | - | 6 |
| | RFKH08-6.1-51A | 10201031302 | flare / solder | | - | - | 1/2 | - | - | - |
| | RFKH08E-6.1-52A | 10201036002 | flare / solder / solder | | - | - | 1/2 | - | 1/4 | - |
| R450A | RFKH10-2.8-61A | 10201039202 | flare / flare | 3/8 | 1/2 | - | - | - | - | - |
| | RFKH10E-2.8-60A | 10201041402 | flare / flare / flare | | 1/2 | - | - | 1/4 | - | - |
| | RFKH10-2.8-72A | 10201031802 | flare / solder | | - | 12 | - | - | - | - |
| | RFKH10E-2.8-59A | 10201036602 | flare / solder / solder | | - | 12 | - | - | - | 6 |
| | RFKH10-2.8-63A | 10201047402 | flare / solder | | - | - | 1/2 | - | - | - |
| | RFKH10E-2.8-64A | 10201047502 | flare / solder / solder | | - | - | 1/2 | - | 1/4 | - |
| R452A | RFKH11-4.5-55A | 10201039302 | flare / flare | 3/8 | 1/2 | - | - | - | - | - |
| | RFKH11E-4.5-54A | 10201041502 | flare / flare / flare | | 1/2 | - | - | 1/4 | - | - |
| | RFKH11-4.5-56A | 10201031902 | flare / solder | | - | 12 | - | - | - | - |
| | RFKH11E-4.5-53A | 10201036702 | flare / solder / solder | | - | 12 | - | - | - | 6 |
| | RFKH11-4.5-57A | 10201032002 | flare / solder | | - | - | 1/2 | - | - | - |
| | RFKH11E-4.5-58A | 10201036802 | flare / solder / solder | | - | - | 1/2 | - | 1/4 | - |
| R513A | RFKH14-2.7-68A | 10201039602 | flare / flare | 3/8 | 1/2 | - | - | - | - | - |
| | RFKH14E-2.7-67A | 10201041902 | flare / flare / flare | | 1/2 | - | - | 1/4 | - | - |
| | RFKH14-2.7-70A | 10201032702 | flare / solder | | - | 12 | - | - | - | - |
| | RFKH14E-2.7-65A | 10201037402 | flare / solder / solder | | - | 12 | - | - | - | 6 |
| | RFKH14-2.7-71A | 10201032802 | flare / solder | | - | - | 1/2 | - | - | - |
| | RFKH14E-2.7-76A | 10201037502 | flare / solder / solder | | - | - | 1/2 | - | 1/4 | - |
| R455A / R454C | RFKH20-4.3-80A | 10201039702 | flare / flare | 3/8 | 1/2 | - | - | - | - | - |
| | RFKH20E-4.3-79A | 10201042002 | flare / flare / flare | | 1/2 | - | - | 1/4 | - | - |
| | RFKH20-4.3-81A | 10201032902 | flare / solder | | - | 12 | - | - | - | - |
| | RFKH20E-4.3-78A | 10201037602 | flare / solder / solder | | - | 12 | - | - | - | 6 |
| | RFKH20-4.3-82A | 10201033002 | flare / solder | | - | - | 1/2 | - | - | - |
| | RFKH20E-4.3-83A | 10201037702 | flare / solder / solder | | - | - | 1/2 | - | 1/4 | - |

# THERMOSTATIC EXPANSION VALVE

*Tab. B : Models with Range N : Temperature Range from -40°C to +10°C [ with MOP = +15°C ]*

| Ref. | Model Valve Body | Part Number[1 & 4)] | Connection type | Inlet ØA | Outlet ØB | | | Ext. ØC | | |
|---|---|---|---|---|---|---|---|---|---|---|
| | | | In / Out / Ext. Pressure Equal. | Flare | Flare | Solder | | Flare | Solder | Solder |
| | | | | [inch] | [inch] | [mm] | [inch] | [inch] | [inch] | [mm] |
| R22 | RFKH 01-6.0-205A | 10201042302 | flare / flare | 3/8 | 1/2 | - | - | - | - | - |
| | RFKH01E-6.0-204A | 10201039902 | flare / flare / flare | | 1/2 | - | - | 1/4 | - | - |
| | RFKH01-6.0-206A | 10201042402 | flare / solder | | - | 12 | - | - | - | - |
| | RFKH01E-6.0-201A | 10201042102 | flare / solder / solder | | - | 12 | - | - | - | 6 |
| | RFKH01-6.0-202A | 10201042202 | flare / solder | | - | - | 1/2 | - | - | - |
| | RFKH01E-6.0-203A | 10201033402 | flare / solder / solder | | - | - | 1/2 | - | 1/4 | - |
| R407C | RFKH02-6.3-209A | 10201038002 | flare / flare | 3/8 | 1/2 | - | - | - | - | - |
| | RFKH02E-6.3-208A | 10201043702 | flare / flare / flare | | 1/2 | - | - | 1/4 | - | - |
| | RFKH02-6.3-210A | 10201029502 | flare / solder | | - | 12 | - | - | - | - |
| | RFKH02E-6.3-211A | 10201033802 | flare / solder / solder | | - | 12 | - | - | - | 6 |
| | RFKH02-6.3-212A | 10201029602 | flare / solder | | - | - | 1/2 | - | - | - |
| | RFKH02E-6.3-207A | 10201033702 | flare / solder / solder | | - | - | 1/2 | - | 1/4 | - |
| R404A / R507A | RFKH03-4.8-218A | 10201045102 | flare / flare | 3/8 | 1/2 | - | - | - | - | - |
| | RFKH03E-4.8-217A | 10201040302 | flare / flare / flare | | 1/2 | - | - | 1/4 | - | - |
| | RFKH03-4.8-214A | 10201030102 | flare / solder | | - | 12 | - | - | - | - |
| | RFKH03E-4.8-213A | 10201034502 | flare / solder / solder | | - | 12 | - | - | - | 6 |
| | RFKH03-4.8-215A | 10201030202 | flare / solder | | - | - | 1/2 | - | - | - |
| | RFKH03E-4.8-216A | 10201034602 | flare / solder / solder | | - | - | 1/2 | - | 1/4 | - |
| R134a | RFKH04-2.9-221A | 10201038602 | flare / flare | 3/8 | 1/2 | - | - | - | - | - |
| | RFKH04E-2.9-220A | 10201040702 | flare / flare / flare | | 1/2 | - | - | 1/4 | - | - |
| | RFKH04-2.9-222A | 10201045302 | flare / solder | | - | 12 | - | - | - | - |
| | RFKH04E-2.9-219A | 10201045202 | flare / solder / solder | | - | 12 | - | - | - | 6 |
| | RFKH04-2.9-223A | 10201030902 | flare / solder | | - | - | 1/2 | - | - | - |
| | RFKH04E-2.9-224A | 10201035402 | flare / solder / solder | | - | - | 1/2 | - | - | 1/4 |
| R410A | RFKH05-7.6-230A | 10201045702 | flare / flare | 3/8 | 1/2 | - | - | - | - | - |
| | RFKH05E-7.6-225A | 10201040802 | flare / flare / flare | | 1/2 | - | - | 1/4 | - | - |
| | RFKH05-7.6-229A | 10201045602 | flare / solder | | - | 12 | - | - | - | - |
| | RFKH05E-7.6-228A | 10201045502 | flare / solder / solder | | - | 12 | - | - | - | 6 |
| | RFKH05-7.6-227A | 10201045402 | flare / solder | | - | - | 1/2 | - | - | - |
| | RFKH05E-7.6-226A | 10201035602 | flare / solder / solder | | - | - | 1/2 | - | - | 1/4 |

# THERMOSTATIC EXPANSION VALVE

*Tab. C : Models with Range NL : Temperature Range from -40°C to -15°C [ with MOP = -10°C ]*

| Ref. | Model Valve Body | Part Number[1 & 4)] | Connection type | Inlet ØA | Outlet ØB | | | Ext. ØC | | |
|---|---|---|---|---|---|---|---|---|---|---|
| | | | In / Out / Ext. Pressure Equal. | Flare | Flare | Solder | | Flare | Solder | Solder |
| | | | | [inch] | [inch] | [mm] | [inch] | [inch] | [inch] | [mm] |
| R404A / R507A | RFKH03-4.8-312A | 10201038302 | flare / flare | 3/8 | 1/2 | - | - | - | - | - |
| | RFKH03E-4.8-311A | 10201040402 | flare / flare / flare | | 1/2 | - | - | 1/4 | - | - |
| | RFKH03-4.8-308A | 10201030302 | flare / solder | | - | 12 | - | - | - | - |
| | RFKH03E-4.8-307A | 10201034802 | flare / solder / solder | | - | 12 | - | - | - | 6 |
| | RFKH03-4.8-309A | 10201030402 | flare / solder | | - | - | 1/2 | - | - | - |
| | RFKH03E-4.8-310A | 10201034902 | flare / solder / solder | | - | - | 1/2 | - | 1/4 | - |
| R448A / R449A | RFKH08-6.1-315A | 10201039002 | flare / flare | 3/8 | 1/2 | - | - | - | - | - |
| | RFKH08E-6.1-314A | 10201041202 | flare / flare / flare | | 1/2 | - | - | 1/4 | - | - |
| | RFKH08-6.1-316A | 10201031502 | flare / solder | | - | 12 | - | - | - | - |
| | RFKH08E-6.1-313A | 10201036302 | flare / solder / solder | | - | 12 | - | - | - | 6 |
| | RFKH08-6.1-317A | 10201031602 | flare / solder | | - | - | 1/2 | - | - | - |
| | RFKH08E-6.1-318A | 10201036402 | flare / solder / solder | | - | - | 1/2 | - | 1/4 | - |
| R452A | RFKH11-4.5-320A | 10201039502 | flare / flare | 3/8 | 1/2 | - | - | - | - | - |
| | RFKH11E-4.5-319A | 10201041702 | flare / flare / flare | | 1/2 | - | - | 1/4 | - | - |
| | RFKH11-4.5-321A | 10201032302 | flare / solder | | - | 12 | - | - | - | - |
| | RFKH11E-4.5-324A | 10201037002 | flare / solder / solder | | - | 12 | - | - | - | 6 |
| | RFKH11-4.5-322A | 10201032402 | flare / solder | | - | - | 1/2 | - | - | - |
| | RFKH11E-4.5-323A | 10201037102 | flare / solder / solder | | - | - | 1/2 | - | - | 1/4 |

**Note:** 1) Extent of delivery: valve body and bulb strap
2) Different evaporation temperature range on request
3) MOP function on request
4) Part Number is referred to Multi Pack

# THERMOSTATIC EXPANSION VALVE

*Tab. D : Models with Range B : Temperature Range from -60°C to -25°C [ without MOP ]*

| Ref. | Model Valve Body | Part Number[1 & 4)] | Connection type | Inlet ØA | Outlet ØB | | | Ext. ØC | | |
|---|---|---|---|---|---|---|---|---|---|---|
| | | | In / Out / Ext. Pressure Equal. | Flare | Flare | Solder | | Flare | Solder | Solder |
| | | | | [inch] | [inch] | [mm] | [inch] | [inch] | [inch] | [mm] |
| R404A / R507A | RFKH03-4.8-106A | 10201038102 | flare / flare | 3/8 | 1/2 | - | - | - | - | - |
| | RFKH03E-4.8-105A | 10201040102 | flare / flare / flare | | 1/2 | - | - | 1/4 | - | - |
| | RFKH03-4.8-102A | 10201029802 | flare / solder | | - | 12 | - | - | - | - |
| | RFKH03E-4.8-101A | 10201034002 | flare / solder / solder | | - | 12 | - | - | - | 6 |
| | RFKH03-4.8-103A | 10201029902 | flare / solder | | - | - | 1/2 | - | - | - |
| | RFKH03E-4.8-104A | 10201034102 | flare / solder / solder | | - | - | 1/2 | - | 1/4 | - |

*Tab. E : Models with Range B : Temperature Range from -60°C to -25°C [ with MOP -20°C ]*

| Ref. | Model Valve Body | Part Number[1 & 4)] | Connection type | Inlet ØA | Outlet ØB | | | Ext. ØC | | |
|---|---|---|---|---|---|---|---|---|---|---|
| | | | In / Out / Ext. Pressure Equal. | Flare | Flare | Solder | | Flare | Solder | Solder |
| | | | | [inch] | [inch] | [mm] | [inch] | [inch] | [inch] | [mm] |
| R404A / R507A | RFKH03-4.8-406A | 10201038202 | flare / flare | 3/8 | 1/2 | - | - | - | - | - |
| | RFKH03E-4.8-405A | 10201040202 | flare / flare / flare | | 1/2 | - | - | 1/4 | - | - |
| | RFKH03-4.8-402A | 10201045002 | flare / solder | | - | 12 | - | - | - | - |
| | RFKH03E-4.8-401A | 10201034202 | flare / solder / solder | | - | 12 | - | - | - | 6 |
| | RFKH03-4.8-403A | 10201030002 | flare / solder | | - | - | 1/2 | - | - | - |
| | RFKH03E-4.8-404A | 10201034302 | flare / solder / solder | | - | - | 1/2 | - | 1/4 | - |
| R452A | RFKH11-4.5-409A | 10201047702 | flare / flare | 3/8 | 1/2 | - | - | - | - | - |
| | RFKH11E-4.5-408A | 10201041802 | flare / flare / flare | | 1/2 | - | - | 1/4 | - | - |
| | RFKH11-4.5-410A | 10201032502 | flare / solder | | - | 12 | - | - | - | - |
| | RFKH11E-4.5-407A | 10201037202 | flare / solder / solder | | - | 12 | - | - | - | 6 |
| | RFKH11-4.5-411A | 10201032602 | flare / solder | | - | - | 1/2 | - | - | - |
| | RFKH11E-4.5-412A | 10201037302 | flare / solder / solder | | - | - | 1/2 | - | 1/4 | - |

**Note:** 1) Extent of delivery: valve body and bulb strap
2) Different evaporation temperature range on request
3) MOP function on request
4) Part Number is referred to Multi Pack

# THERMOSTATIC EXPANSION VALVE

## DIMENSIONS

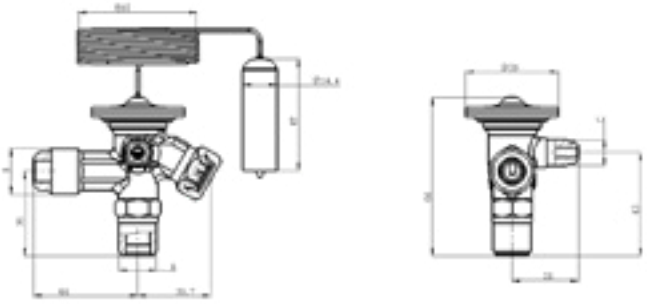

*Valve Body - Connection Type: flare/flare/flare*

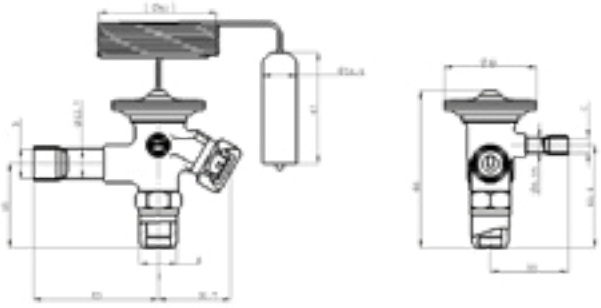

*Valve Body - Connection Type: flare/solder/solder*

## ACCESSORIES

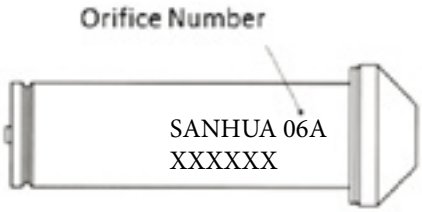


## ORIFICES

| Orifice Number | Valve Orifice Model | Valve Orifice Part Number | Nominal Capacity[1] [ kW ] | | | | | |
|---|---|---|---|---|---|---|---|---|
| | | | R22 | R407C | R404A R507A | R134a | R410A | R407A R407F |
| 0X | RFKH-023-0X | 10202001702 | 1 | 1 | 0,7 | 0,69 | 1,3 | 1 |
| 0 | RFKH-023-00 | 10202001002 | 1,9 | 2,1 | 1,4 | 1,2 | 2,5 | 1,8 |
| 1 | RFKH-023-01 | 10202001102 | 3,8 | 4 | 2,8 | 2,1 | 5 | 3,7 |
| 2 | RFKH-023-02 | 10202001202 | 5,1 | 5,4 | 4 | 2,7 | 6,2 | 5,1 |
| 3 | RFKH-023-03 | 10202001302 | 8,6 | 9,2 | 6,8 | 4,4 | 11,2 | 8,6 |
| 4 | RFKH-023-04 | 10202001402 | 13,2 | 13,9 | 10,8 | 6,5 | 17 | 13,4 |
| 5 | RFKH-023-05 | 10202001502 | 18,1 | 18,5 | 14,1 | 8,6 | 21,3 | 17,6 |
| 6 | RFKH-023-06 | 10202001602 | 21,3 | 22,1 | 16,8 | 10,3 | 26,8 | 21,2 |

| Orifice Number | Valve Orifice Model | Valve Orifice Part Number | Nominal Capacity[1] [ kW ] | | | | | | |
|---|---|---|---|---|---|---|---|---|---|
| | | | R448A | R449A | R450A | R452A | R513A | R455A | R454C |
| 0X | RFKH-023-0X | 10202001702 | 1,1 | 1,0 | 0,6 | 0,8 | 0,6 | 0,6 | 0,6 |
| 0 | RFKH-023-00 | 10202001002 | 2,1 | 2,0 | 1,1 | 1,5 | 1,0 | 1,3 | 1,2 |
| 1 | RFKH-023-01 | 10202001102 | 4,0 | 4,0 | 1,9 | 3,0 | 1,8 | 2,5 | 2,4 |
| 2 | RFKH-023-02 | 10202001202 | 5,0 | 4,9 | 2,3 | 3,7 | 2,2 | 3,5 | 3,3 |
| 3 | RFKH-023-03 | 10202001302 | 8,9 | 8,8 | 4,2 | 6,7 | 4,0 | 6,0 | 5,8 |
| 4 | RFKH-023-04 | 10202001402 | 13,6 | 13,4 | 6,3 | 10,1 | 6,1 | 9,8 | 9,4 |
| 5 | RFKH-023-05 | 10202001502 | 17,0 | 16,8 | 7,9 | 12,7 | 7,6 | 12,6 | 12,1 |
| 6 | RFKH-023-06 | 10202001602 | 21,4 | 21,1 | 9,9 | 16,0 | 9,6 | 15,1 | 14,5 |

**Note:** 1) Nominal working conditions: Condensing temperature 38°C; evaporating temperature +4,4°C; liquid temperature 37°C
2) R407C data based on dew point conditions
3) Nominal capacity based on
- Static Superheat (SS) 5K (for models without MOP) and 4K (for models with MOP)
- Opening Superheat(OS) 6K

# THERMOSTATIC EXPANSION VALVE

## SOLDER ADAPTERS FOR RFKH INLET A

| Model | Part Number[1)] | SAE Flare Ø e | Solder Connection Ø d |
|---|---|---|---|
| RFK-A04-038010 | 20200001602 | 3/8″ | 3/8" |
| RFK-A04-038011 | 20201002502 | | 10mm |
| RFK-A04-038012 | 20201002602 | | 1/4" |
| RFK-A04-038013 | 20201002702 | | 6mm |

**Note:** 1) Copper pipe and flare nut are in the extent of delivery

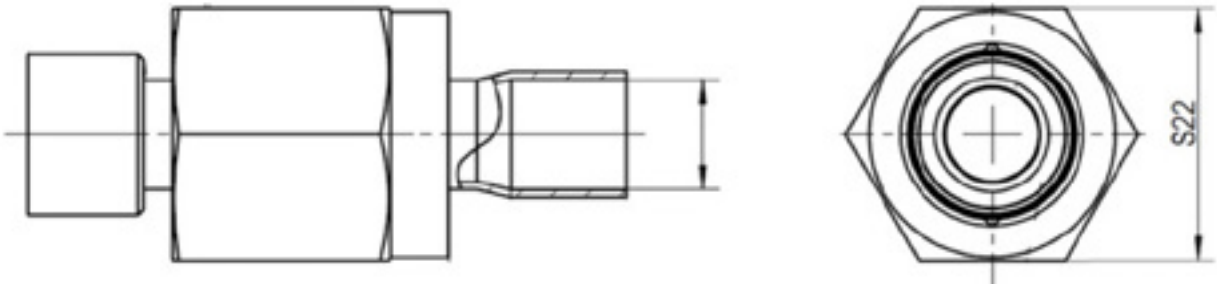


## SOLDER ADAPTERS FOR RFKH EXTERNAL PRESSURE EQUALIZATION C

| Model | Part Number[1)] | SAE Flare Ø e | Solder Connection Ø d |
|---|---|---|---|
| RFKA-038-03 | 20201000502 | 1/4″ | 6mm |
| RFKA-038-04 | 20201000602 | | 1/4" |

**Note:** 1) Copper pipe and flare nut are in the extent of delivery

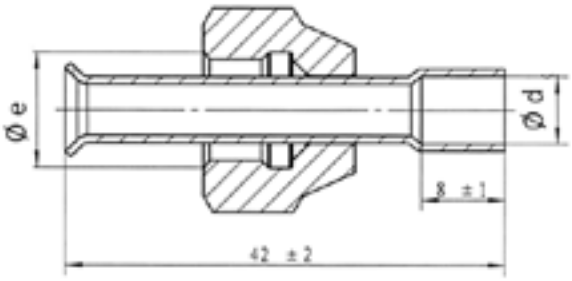

# THERMOSTATIC EXPANSION VALVE

## ACCESSORIES

*All the RFGC06 models listed in this datasheet are equipped with copper stripe to fix the bulb suitable for a wide range of pipe diameters on suction line piping.*

*As an alternative Sanhua offers clips suitable for pipes with different diameters. It can be ordered as accessories: models and ordering codes are visible in the table below*

| Picture | Type / Pipe | Model | Ordering Number (U11) | Quantity per Pack |
|---|---|---|---|---|
| | Stripe | RFK-000-019013 | 20201012702 | 160 |
| 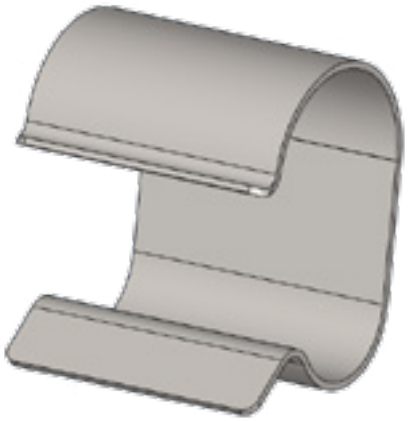 | Clip [6 mm] | RFK-000-025024 | 20205202201 | 500 |
| | Clip [8 mm] | RFK-000-025022 | 20205202001 | |
| | Clip [10 mm] | RFK-000-025021 | 20205201901 | |
| | Clip [12 mm] | RFK-000-025023 | 20205202101 | |
| | Clip [1/4”] | RFK-000-025024 | 20205202201 | |
| | Clip [5/16" mm] | RFK-000-025022 | 20205202001 | |
| | Clip [3/8" mm] | RFK-000-025021 | 20205201901 | |
| | Clip [1/2" mm] | RFK-000-025023 | 20205202101 | |

***RFGC*** *SERIES*

# THERMOSTATIC EXPANSION VALVE

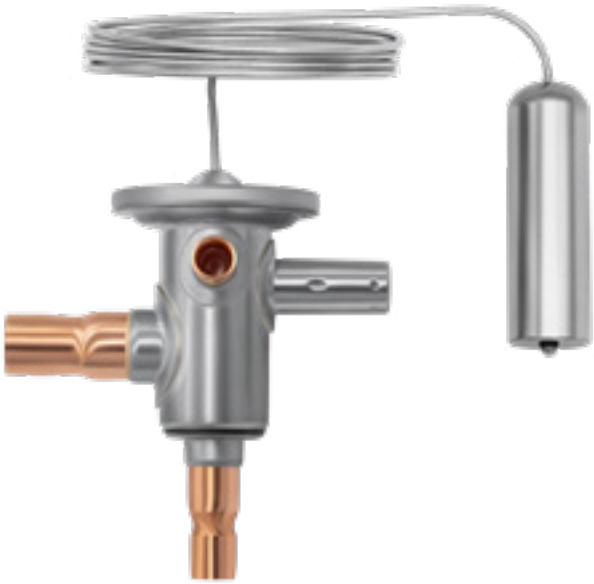

RFGC series thermostatic expansion valves are used to adjust mass flow of refrigerant into the evaporator while controlling the refrigerant´s superheat at the outlet of the evaporator.
The main body in stainless steel guarantees an increased robustness, certainly of a lead-free material with advantage of connections welding in copper.
Typical applications are refrigeration systems like commercial refrigerators and freezers, dehumidifiers as well as air conditioners and heat pumps at various evaporation temperatures. RFGC 06 series has been designed and optimized for application with propane (R290).

## FEATURES

- THE MAIN BODY IS MADE OF STAINLESS STEEL, HIGHLY ROBUST, WITH HIGH LEVEL OF VIBRATION AND CORROSION RESISTANCE, LIGHTWEIGHT AND COMPACT STRUCTURE.
- CONNECTION IN COPPER FOR WELDING
- OPTIONAL MOP CHARGE
- INTERNAL STRAINER INCLUDED ON INLET
- THE TEMPERATURE SENSOR ASSEMBLY HAS CROSS CHARGE, ENSURING GOOD SUPERHEAT CHARACTERISTICS ACROSS THE ENTIRE EVAPORATION TEMPERATURE RANGE
- STAINLESS STEEL VALVE PORT, STRONG AND RELIABLE, CAN WITHSTAND THE REVERSE IMPACT OF HIGH PRESSURE REFRIGERANT WITHIN THE SYSTEM.

### GENERAL SPECIFICATIONS

- Special series designed for application with R290
- Evaporating temperature min/max: -40°C/+10°C
- Medium temperature min/max: -40°C/70°C
- Factory setting for static super heat: 4 K
- Max. operating pressure PS: 3,5 MPa (35 bar)
- Installation position with preferably valve head upwards

# THERMOSTATIC EXPANSION VALVE

## TECHNICAL PARAMETERS

| Position Number | Model Designation Legend | |
|---|---|---|
| 1 | **Product Code** | **Product Series** |
| | RFGC | Thermostatic expansion valve |
| 2 | **Refrigerant** | **Description** |
| | 06 | R290 |
| 3 | **Pressure Equalization** | **Description** |
| | E | External pressure equalization |
| | (Omitted) | Internal pressure equalization |
| 4 | **Nominal Capacity** | **Description** |
| | xxx | Nominal Capacity (in USRT) |
| 5 | **Miscellaneous** | **Description** |
| | xxxx | Digits for additional information e.g. temperature range, MOP, Bleed… |

## MODEL DESIGNATION EXAMPLE

| Position Number | | | | | According to Model Designation Legend |
|---|---|---|---|---|---|
| 1 | 2 | 3 | 4 | 5 | |
| **RFGC** | 06 | E | xxx | xxx | Thermostatic expansion valve |
| RFGC | **06** | E | xxx | xxx | Refrigerant R290 |
| RFGC | 06 | **E** | xxx | xxx | Connection for external pressure equalization |
| RFGC | 06 | E | **xxx** | xxx | Nominal Capacity (in USRT) |
| RFGC | 06 | E | xxx | **xxx** | Digits and letter for additional information |

## MODELS DESIGNATION (VALVE HEAD)

| Code | Description |
|---|---|
| GC06E | Part number |
| -40/+10°C | Evaporating temperature (°C) |
| -40/+50°F | Evaporating temperature (°F) |
| R290 | Refrigerant |
| MWP 3.5 Mpa | Max. Working pressure (MPa) |
| MWP 505 psig | Max. Working pressure (Psig) |

# THERMOSTATIC EXPANSION VALVE

## TECHNICAL DATA

*Nominal Cooling Capacities* [1) 2)]

| | Size | Valve Model | Capacity | |
|---|---|---|---|---|
| | | | [ kW ] | [ USRT ] |
| R290 | x | RFGC06(E)-014-xxx | 0,49 | 0,14 |
| | 0 | RFGC06(E)-0.18-xxx | 0.64 | 0,18 |
| | 1 | RFGC06(E)-0.27-xxx | 0.94 | 0,27 |
| | 2 | RFGC06-0.32-1103 | 1.13 | 0.32 |
| | 3 | RFGC06(E)-0.41-xxx | 1.5 | 0,41 |
| | 4 | RFGC06(E)-0.72-xxx | 2.6 | 0,72 |
| | 5 | RFGC06(E)-0.96-xxx | 3.4 | 0.96 |
| | 6 | RFGC06(E)-1.5-xxx | 5.3 | 1.5 |
| | 7 | RFGC06(E)-2.0-xxx | 7.0 | 2.0 |
| | 8 | RFGC06(E)-2.9-xxx | 10.2 | 2.9 |
| | 9 | RFGC06(E)-4.1-xxx | 14.3 | 4.1 |

**Note:** 1) Nominal capacity valid for:
- Version in straight and angle shape -
- Versions with metrical and imperial connections

2) Nominal working conditions: Condensing temperature: 38°C; evaporating temperature +4,4°C; Liquid temperature 37°C

## MODEL LIST

*Table 1 – RFGC Models with internal equalization and imperial connections*

| Valve Size | Bleed | Connection IN/OUT | | Model Name [Internal Eq.] | Product Number [Internal Eq.] |
|---|---|---|---|---|---|
| | [%] | [inch] | [mm] | | |
| x | 0% | 1/4 × 3/8 | / | RFGC06-0.14-1100 | RFGC0000102 |
| 0 | 0% | 1/4 × 3/8 | / | RFGC06-0.18-1101 | RFGC0000202 |
| 1 | 0% | 1/4 × 1/2 | / | RFGC06-0.27-1102 | RFGC0000302 |
| 2 | 0% | 1/4 × 1/2 | / | RFGC06-0.32-1103 | RFGC0000402 |
| 3 | 0% | 1/4 × 1/2 | / | RFGC06-0.41-1104 | RFGC0002702 |
| 4 | 0% | 1/4 × 1/2 | / | RFGC06-0.72-1105 | RFGC0000502 |
| 5 | 0% | 1/4 × 1/2 | / | RFGC06-0.96-1106 | RFGC0000602 |
| 6 | 0% | 1/4 × 1/2 | / | RFGC06-1.5-1107 | RFGC0000702 |
| 7 | 0% | 3/8 × 1/2 | / | RFGC06-2.0-1108 | RFGC0000802 |

# THERMOSTATIC EXPANSION VALVE

## MODEL LIST

*Table 2 – RFGC Models with internal equalization and metric connections*

| Valve Size | Bleed | Connection IN/OUT | | Model Name [Internal Eq.] | Product Number [Internal Eq.] |
|---|---|---|---|---|---|
| | [%] | [inch] | [mm] | | |
| x | 0% | / | 6x10 | RFGC06-0.14-1114 | RFGC0000902 |
| 0 | 0% | / | 6x10 | RFGC06-0.18-1115 | RFGC0001002 |
| 1 | 0% | / | 6x12 | RFGC06-0.27-1116 | RFGC0001102 |
| 2 | 0% | / | 6x12 | RFGC06-0.32-1117 | RFGC0001202 |
| 3 | 0% | / | 6x12 | RFGC06-0.41-1118 | RFGC0002802 |
| 4 | 0% | / | 6x12 | RFGC06-0.72-1119 | RFGC0001302 |
| 5 | 0% | / | 6x12 | RFGC06-0.96-1120 | RFGC0001402 |
| 6 | 0% | / | 6x12 | RFGC06-1.5-1121 | RFGC0001502 |
| 7 | 0% | / | 10x12 | RFGC06-2.0-1122 | RFGC0001602 |

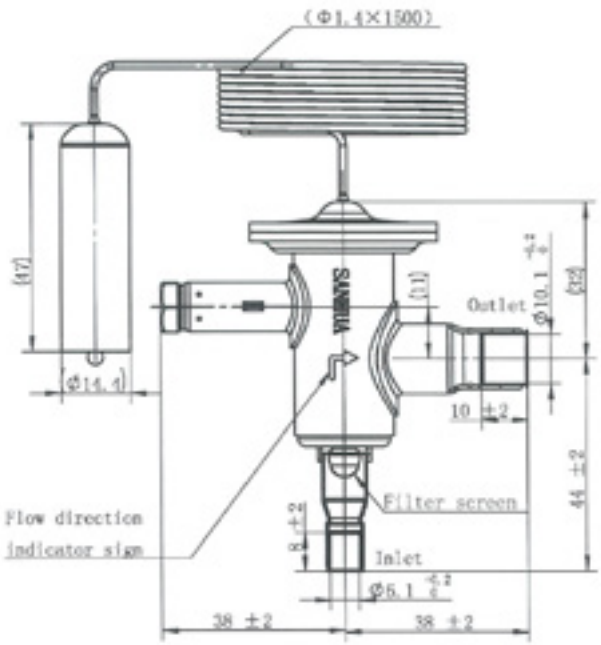

# THERMOSTATIC EXPANSION VALVE

## MODEL LIST

*Table 3 - RFGC Models with external equalization (imperial and metric connections)*

| Valve Size | Bleed | Connection IN/OUT | | Connection Ext. | | Model Name [External Eq.] | Product Number [External Eq.] |
|---|---|---|---|---|---|---|---|
| | [%] | [inch] | [mm] | [inch] | [mm] | | |
| 5 | 0% | 1/4×1/2 | / | 1/4 | / | RFGC06E-0.96-1109 | RFGC0001702 |
| 6 | 0% | 1/4×1/2 | / | 1/4 | / | RFGC06E-1.5-1110 | RFGC0001802 |
| 7 | 0% | 3/8×1/2 | / | 1/4 | / | RFGC06E-2.0-1111 | RFGC0001902 |
| 8 | 0% | 3/8×1/2 | / | 1/4 | / | RFGC06E-2.9-1112 | RFGC0002002 |
| 9 | 0% | 3/8×1/2 | / | 1/4 | / | RFGC06E-4.1-1113 | RFGC0002102 |
| 5 | 0% | / | 6×12 | / | 6 | RFGC06E-0.96-1123 | RFGC0002202 |
| 6 | 0% | / | 6×12 | / | 6 | RFGC06E-1.5-1124 | RFGC0002302 |
| 7 | 0% | / | 10×12 | / | 6 | RFGC06E-2.0-1125 | RFGC0002402 |
| 8 | 0% | / | 10×12 | / | 6 | RFGC06E-2.9-1126 | RFGC0002502 |
| 9 | 0% | / | 10×12 | / | 6 | RFGC06E-4.1-1127 | RFGC0002602 |

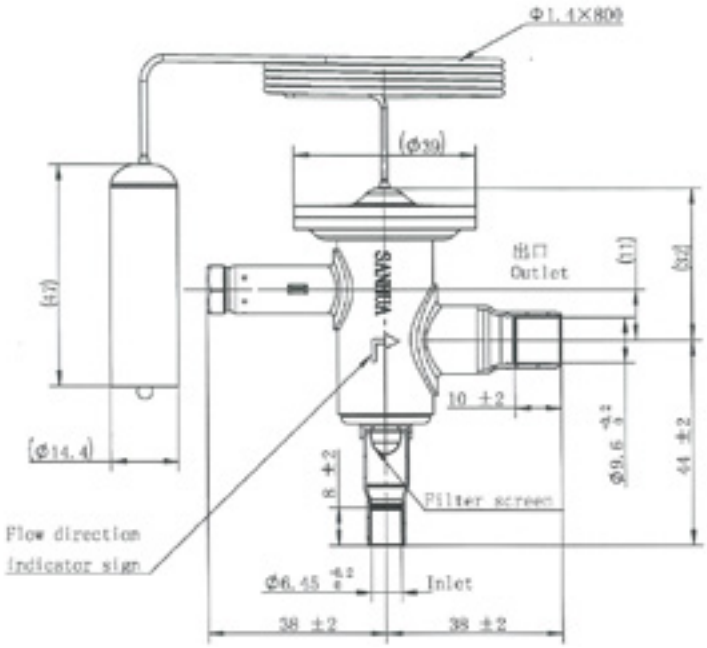


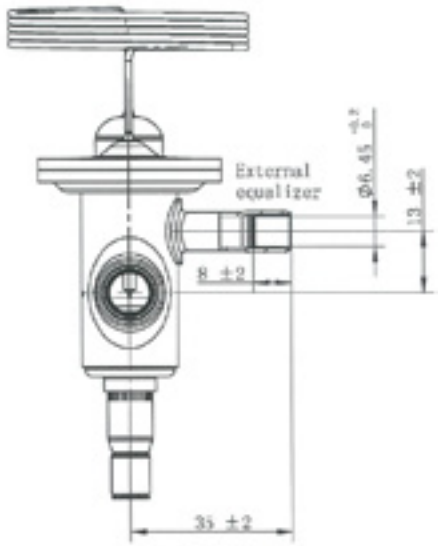

# THERMOSTATIC EXPANSION VALVE

## ACCESSORIES

*All the RFGC06 models listed in this datasheet are equipped with copper stripe to fix the bulb suitable for a wide range of pipe diameters on suction line piping.*

*As an alternative Sanhua offers clips suitable for pipes with different diameters. It can be ordered as accessories: models and ordering codes are visible in the table below*

| Picture | Type / Pipe | Model | Ordering Number (U11) | Quantity per Pack |
|---|---|---|---|---|
| | Stripe | RFK-000-019013 | 20201012702 | 160 |
| 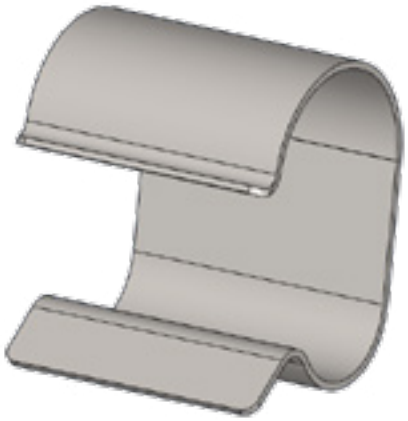 | Clip [6 mm] | RFK-000-025024 | 20205202201 | 500 |
| | Clip [8 mm] | RFK-000-025022 | 20205202001 | |
| | Clip [10 mm] | RFK-000-025021 | 20205201901 | |
| | Clip [12 mm] | RFK-000-025023 | 20205202101 | |
| | Clip [1/4”] | RFK-000-025024 | 20205202201 | |
| | Clip [5/16" mm] | RFK-000-025022 | 20205202001 | |
| | Clip [3/8" mm] | RFK-000-025021 | 20205201901 | |
| | Clip [1/2" mm] | RFK-000-025023 | 20205202101 | |

***RFGB*** *SERIES*

# THERMOSTATIC EXPANSION VALVE

RFGB series thermostatic expansion valves are used to adjust mass flow of refrigerant into the evaporator while controlling the refrigerant´s superheat at the outlet of the evaporator. They can be used for various refrigerants under all working conditions. Typical applications are refrigeration systems like commercial refrigerators and freezers, icemakers, dehumidifiers as well as air conditioners at various evaporation temperature.

## FEATURES

- COMPACT DESIGN WITH BUILD-IN ORIFICE
- WARM THERMO HEAD CONSTRUCTION
- ALL CONNECTIONS PIPES ARE COMPLETELY IN COPPER
- VALVES WITH MOP FUNCTION CAN BE PROVIDED TO ASSURE RELIABLE COMPRESSOR OPERATION
- APPLICABLE IN A WIDE EVAPORATION TEMPERATURE RANGE
- RELIABLE AND CONSISTENT PERFORMANCE OF SUPERHEAT CONTROL

### GENERAL SPECIFICATION

- Applicable for all common HCFC and HFC refrigerants such as: R22, R134a, R404A, R407C, R507A...
- Ambient temperature min./max.: -35/+55°C
- Medium temperature TS min./max.: -40°C / +70°C
- Max. operating pressure PS: 3,5 MPa (35 bar)
- Installation position: - Preferably valve head upwards
  - Flow direction from inlet A to outlet B
- Certifications: UL/CSA and PED declaration

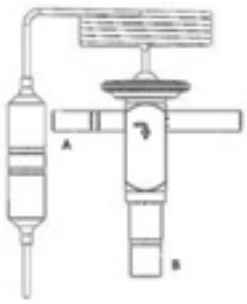


Angle version

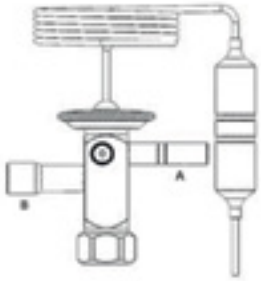


Straight version

# THERMOSTATIC EXPANSION VALVE

## TECHNICAL PARAMETERS

- RFGB valve available in straight shape with adjustable superheat on site
- RFGB valve available in angle shape with fixed factory superheat settings
- Both versions are available with the following solder connections
  - Metric: Inlet 6mm ODF/ Outlet 10mm ODF or Inlet 10mm ODF/ Outlet 12mm ODF
  - Imperial: Inlet 1/4" ODF/ Outlet 3/8" ODF or Inlet 3/8" ODF/ Outlet 1/2" ODF
- Equalization port available as option:
  - Metric: 6mm ODF (available for models with metric solder connections)
  - Imperial: 1/4" ODF (available for models with imperial solder connections)
- Capillary tube length 800mm

## MODEL DESIGNATION LEGEND

| Position Number | Model Designation Legend | |
|---|---|---|
| 1 | **Product Code** | **Product Series** |
| | RFGB | Thermostatic expansion valve with build-in orifice |
| 2 | **Refrigerant** | **Description** |
| | 1 | R22 |
| | 2 | R407C |
| | 3 | R404A / R507A |
| | 4 | R134a |
| | 6 | R290 |
| 3 | **Pressure Equalization** | **Description** |
| | E | External pressure equalization |
| | (Omitted) | Internal pressure equalization |
| 4 | **Valve Size** | **Internal Orifice Size** |
| | From 1 to 5 | Valve size: proportional to the orifice size and to the nominal capacity |
| 5 | **Valve Shape** | **Description** |
| | S | Straight Version |
| | A | Angle Version |
| 6 | **Connections Type** | **Description** |
| | Mx | Metric: M6 inlet 6mm ; M10 inlet 10mm |
| | Ix | Imperial: I2 inlet 1/4" ; I3 inlet 3/8" |
| 7 | **Miscellaneous** | **Description** |
| | xxx | Digits for additional information e.g. static superheat, MOP, Bleed... |

# THERMOSTATIC EXPANSION VALVE

## MODEL DESIGNATION EXAMPLE

| Position Number | | | | | According to Model Designation Legend |
|---|---|---|---|---|---|
| 1 | 2 | 3 | 4 | 5 | |
| **RFGB** | 04 | E | 1.0 | xxx | Thermostatic expansion valve with build-in orifice |
| RFGB | **04** | E | 1.0 | xxx | Refrigerant: R134a |
| RFGB | 04 | **E** | 1.0 | xxx | With connection for external pressure equalization |
| RFGB | 04 | E | **1.0** | xxx | Nominal Capacity (expressed in USRT) |
| RFGB | 04 | E | 1.0 | **xxx** | Additional digits |

## MODELS DESIGNATION (VALVE HEAD)

| Code | Description |
|---|---|
| GB06E-1.0-518 | Model |
| -40/+10°C | Evaporating temperature (°C) |
| -40/+50°F | Evaporating temperature (°F) |
| R290 | Refrigerant |
| MWP 3.5Mpa | Max. Working Pressure (MPa) |
| MWP 505psig | Max. Working Pressure (Psig) |

## FIXING BULB OPTIONS

*For customized RFGB thermostatic expansion valves it is possible to select the preferred bulb mounting element. The available options are the following two:*

| | | |
|---|---|---|
| Strap | | Suitable for Tube diameter:<br>1/4''; 3/8''; 1/2''; 5/8''; 3/4''; 7/8''; 1'' |
| Clip | | Suitable for Tube diameter:<br>1/4''; 3/8''; 1/2'' |

# THERMOSTATIC EXPANSION VALVE

## TECHNICAL DATA

| Nominal Cooling Capacities[1)2)] | | | | | | |
|---|---|---|---|---|---|---|
| Refrigerant | Size | Model Name[4)] | Drawing | Capacity | | PS |
| | | | | [ USRT ] | [ kW ] | [ MPa ] |
| R22 | 0 | RFGB 01(E) -0 | RFGB01(E)-0.17-xxx | 0,17 | 0,60 | 3,5 |
| | 1 | RFGB 01(E) -1 | RFGB01(E)-0.35-xxx | 0,35 | 1,20 | |
| | 2 | RFGB 01(E) -2 | RFGB01(E)-0.7-xxx | 0,70 | 2,50 | |
| | 3 | RFGB 01(E) -3 | RFGB01(E)-1.0-xxx | 1,00 | 3,50 | |
| | 4 | RFGB 01(E) -4 | RFGB01(E)-1.5-xxx | 1,50 | 5,30 | |
| | 5 | RFGB 01(E) -5 | RFGB01(E)-2.0-xxx | 2,00 | 7,00 | |
| R407C[3)] | 0 | RFGB 02(E) -0 | RFGB02(E)-0.19-xxx | 0,19 | 0,67 | 3,5 |
| | 1 | RFGB 02(E) -1 | RFGB02(E)-0.38-xxx | 0,38 | 1,30 | |
| | 2 | RFGB 02(E) -2 | RFGB02(E)-0.76-xxx | 0,76 | 2,70 | |
| | 3 | RFGB 02(E) -3 | RFGB02(E)-1.1-xxx | 1,10 | 3,90 | |
| | 4 | RFGB 02(E) -4 | RFGB02(E)-1.6-xxx | 1,60 | 5,60 | |
| | 5 | RFGB 02(E) -5 | RFGB02(E)-2.2-xxx | 2,20 | 7,70 | |
| R404A / R507 | 0 | RFGB 03(E) -0 | RFGB03(E)-0.13-xxx | 0,13 | 0,50 | 3,5 |
| | 1 | RFGB 03(E) -1 | RFGB03(E)-0.25-xxx | 0,25 | 0,90 | |
| | 2 | RFGB 03(E) -2 | RFGB03(E)-0.5-xxx | 0,50 | 1,80 | |
| | 3 | RFGB 03(E) -3 | RFGB03(E)-0.7-xxx | 1,70 | 2,50 | |
| | 4 | RFGB 03(E) -4 | RFGB03(E)-1.0-xxx | 1,00 | 3,50 | |
| | 5 | RFGB 03(E) -5 | RFGB03(E)-1.4-xxx | 1,40 | 4,90 | |
| R134a | 0 | RFGB 04(E) -0 | RFGB04(E)-0.12-xxx | 0,12 | 0,40 | 3,5 |
| | 1 | RFGB 04(E) -1 | RFGB04(E)-0.23-xxx | 0,22 | 0,80 | |
| | 2 | RFGB 04(E) -2 | RFGB04(E)-0.44-xxx | 0,44 | 1,50 | |
| | 3 | RFGB 04(E) -3 | RFGB04(E)-0.63-xxx | 0,63 | 2,20 | |
| | 4 | RFGB 04(E) -4 | RFGB04(E)-0.94-xxx | 0,94 | 3,30 | |
| | 5 | RFGB 04(E) -5 | RFGB04(E)-1.3-xxx | 1,30 | 4,60 | |
| R290 | 0 | RFGB 06(E) -0 | RFGB06(E)-0.17-xxx | 0,17 | 1,69 | 3,5 |
| | 1 | RFGB 06(E) -1 | RFGB06(E)-0.35-xxx | 0,35 | 1,20 | |
| | 2 | RFGB 06(E) -2 | RFGB06(E)-0.7-xxx | 0,70 | 2,50 | |
| | 3 | RFGB 06(E) -3 | RFGB06(E)-1.0-xxx | 1,00 | 3,50 | |
| | 4 | RFGB 06(E) -4 | RFGB06(E)-1.5-xxx | 1,50 | 5,30 | |
| | 5 | RFGB 06(E) -5 | RFGB06(E)-2.0-xxx | 2,00 | 7,00 | |

**Note:**

1) Nominal capacity valid for: - Version "S" in straight shape and version "A" in angle shape
- Versions with metrical and imperial connections

2) Nominal working conditions: Condensing temperature: 38°C; evaporating temperature +4,4°C; Liquid temperature 37°C

3) R407C data based on dew point conditions

4) Model Name in this table is referred to the first 4 positions of the model designation

# THERMOSTATIC EXPANSION VALVE

## MODEL LIST

*Evaporation Temp. Range to = +10...-40°C [1)]*

| Model Name [2) 3) 4) 5)] | | | | Connections Size (Solder ODF) | | | | | |
|---|---|---|---|---|---|---|---|---|---|
| **Valve Body** All Refrigerants | **Capacity Size** All Sizes | **Valve Shape[6)]** Straight / Angle | **Pipe connections** Metric / Imperial | **Inlet** | | **Outlet** | | **Pressure Equal.** | |
| | | | | **[mm]** | **[inch]** | **[mm]** | **[inch]** | **[mm]** | **[inch]** |
| RFGB 01 -<br>RFGB 02 -<br>RFGB 03 -<br>RFGB 04 -<br>RFGB 06 - | 0 -<br>1 -<br>2 -<br>3 -<br>4 -<br>5 - | S - | M6<br>M10 | 6 | - | 10 | - | - | - |
| | | | | 10 | - | 12 | - | - | - |
| | | | 2<br>3 | - | 1/4 | - | 3/8 | - | - |
| | | | | - | 3/8 | - | 1/2 | - | - |
| | | A - | M6<br>M10 | 6 | - | 10 | - | - | - |
| | | | | 10 | - | 12 | - | - | - |
| | | | 2<br>3 | - | 1/4 | - | 3/8 | - | - |
| | | | | - | 3/8 | - | 1/2 | - | - |
| RFGB 01E -<br>RFGB 02E -<br>RFGB 03E -<br>RFGB 04E -<br>RFGB 06E - | 0 -<br>1 -<br>2 -<br>3 -<br>4 -<br>5 - | S - | M6<br>M10 | 6 | - | 10 | - | 6 | - |
| | | | | 10 | - | 12 | - | 6 | - |
| | | | 2<br>3 | - | 1/4 | - | 3/8 | - | 1/4 |
| | | | | - | 3/8 | - | 1/2 | - | 1/4 |
| | | A - | M6<br>M10 | 6 | - | 10 | - | 6 | - |
| | | | | 10 | - | 12 | - | 6 | - |
| | | | 2<br>3 | - | 1/4 | - | 3/8 | - | 1/4 |
| | | | | | 3/8 | - | 1/2 | - | 1/4 |

**Note:**

1) Different evaporation temperature range on request

2) Extent of delivery: valve body and bulb strap

3) MOP function on request

4) Delivery time on request

5) Model Name in this table is referred to the first 6 positions of the model designation

6) Superheat : - Straight version "S" with adjustable settings
- Angle version "A" with fixed factory settings

# THERMOSTATIC EXPANSION VALVE

## DIMENSIONS

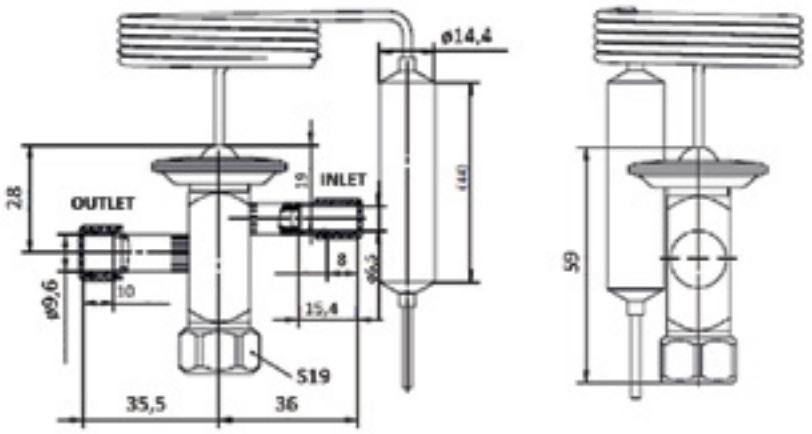


***Straight Shape with Internal Pressure Equalization***

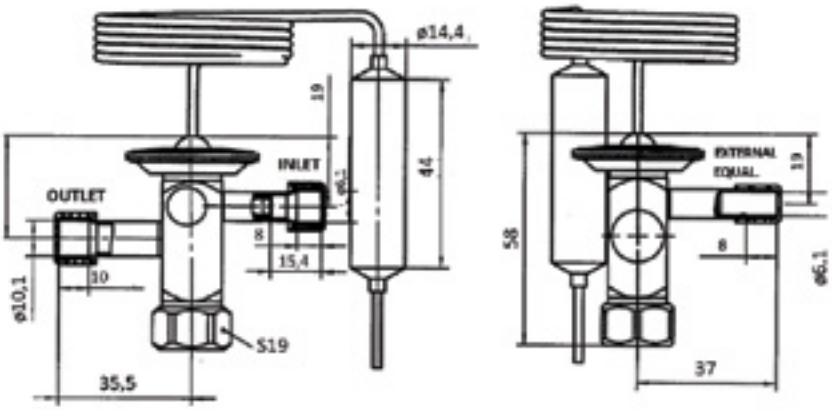


***Straight Shape with External Pressure Equalization***

# THERMOSTATIC EXPANSION VALVE

## DIMENSIONS

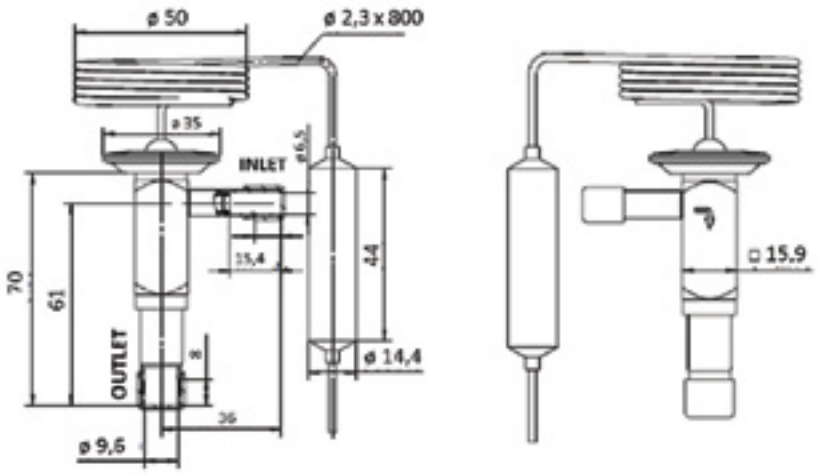


***Angle Shape with Internal Pressure Equalization***

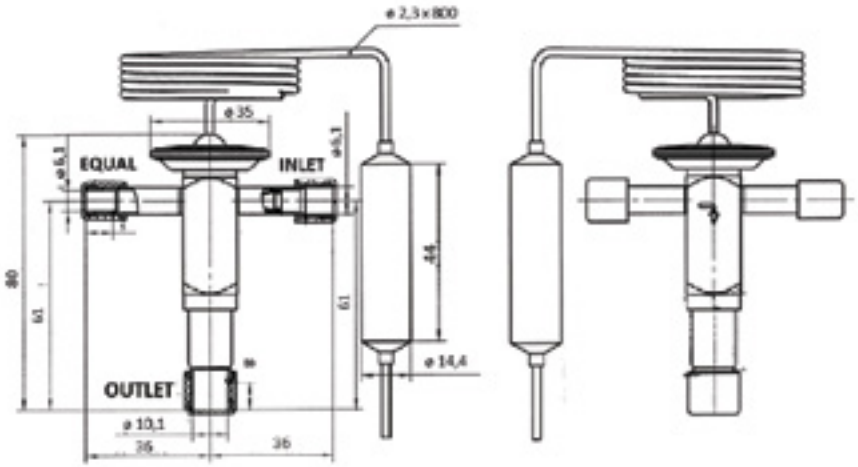


***Angle Shape with External Pressure Equalization***

***RFGB*** *SERIES*

# THERMOSTATIC EXPANSION VALVE WITH REPLACABLE STRAINER

RFGB thermostatic expansion valves are also available on request with a replaceable strainer placed on the inlet connection of the valve. This mechanical filter equipped with a metallic net (mesh 100) can block all the potential impurities present in the refrigeration circuit avoiding that some of them damage the valve. The particular layout of the inlet connection (from the bottom) allows the strainer to be removed for cleaning or replacement without having to remove the valve from the system

All the RFGB variants shown on "Technical Data" and "Model List" tables can be customized on request with the introduction of a replaceable strainer.

## MODEL DESIGNATION EXAMPLE

| Position Number | | | | | | | According to Model Designation Legend |
|---|---|---|---|---|---|---|---|
| 1 | 2 | 3 | 4 | 5 | 6 | 7 | |
| **RFGB** | 04 | E | 3 | S | M6 | xxx | Thermostatic expansion valve with build-in orifice |
| RFGB | **04** | E | 3 | S | M6 | xxx | Refrigerant: R134a |
| RFGB | 04 | **E** | 3 | S | M6 | xxx | With connection for external pressure equalization |
| RFGB | 04 | E | **3** | S | M6 | xxx | Capacity: Valve and orifice size 3 |
| RFGB | 04 | E | 3 | **S** | M6 | xxx | Valve Shape: straight |
| RFGB | 04 | E | 3 | S | **M6** | xxx | Valve pipe connections: metric inlet 6mm/outlet 10mm |
| RFGB | 04 | E | 3 | S | M6 | **8xx** | "8" as first digits for RFGB with strainer |

## DIMENSIONS (RFGB WITH REPLACEABLE STRAINER)

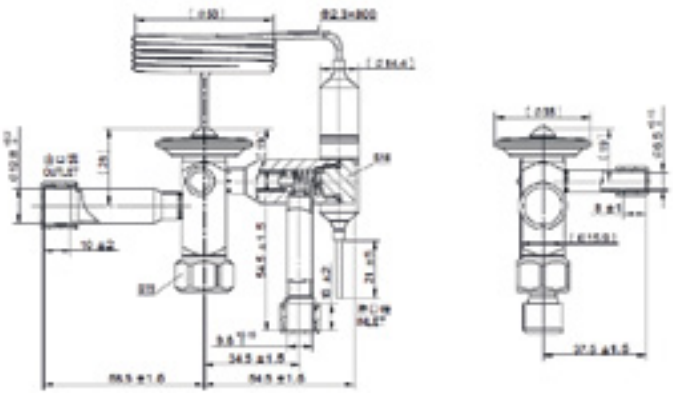

*Straight shape with external equalization and replaceable strainer*

***RFGB*** *SERIES*

# THERMOSTATIC EXPANSION VALVE

RFGB series thermostatic expansion valves are used to adjust mass flow of refrigerant into the evaporator while controlling the refrigerant´s superheat at the outlet of the evaporator. They can be used for various refrigerants under all working conditions. Typical applications are refrigeration systems like commercial refrigerators and freezers, icemakers, dehumidifiers as well as air conditioners and heat pumps at various evaporation temperatures. RFGB 06 series has been designed and optimized for application with propane (R290).

## FEATURES

- COMPACT DESIGN WITH BUILD-IN ORIFICE
- WARM THERMO HEAD CONSTRUCTION
- ALL CONNECTIONS PIPES ARE COMPLETELY IN COPPER
- BULB AND CAPILLARY IN STAINLESS STEEL GUARANTEE HIGH ROBUSTNESS
- VALVES WITH MOP FUNCTION CAN BE PROVIDED TO ASSURE RELIABLE COMPRESSOR OPERATION
- APPLICABLE IN A WIDE EVAPORATION TEMPERATURE RANGE
- RELIABLE AND CONSISTENT PERFORMANCE OF SUPERHEAT CONTROL

### GENERAL SPECIFICATION

- Special series designed for application with R290
- Ambient temperature min./max.: -35/+55°C
- Medium temperature TS min./max.: -40°C / +70°C
- Factory setting for static super heat: 3.5 K
- Max. operating pressure PS: 3,5 MPa (35 bar)
- Installation position: - Preferably valve head upwards
  - Flow direction from inlet A to outlet B
- Certifications: UL/CSA and PED declaration

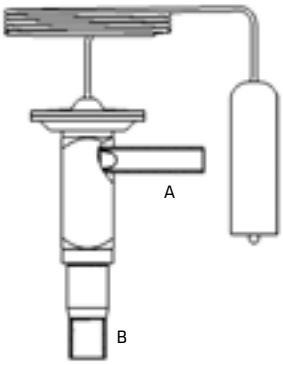


**Angle version**

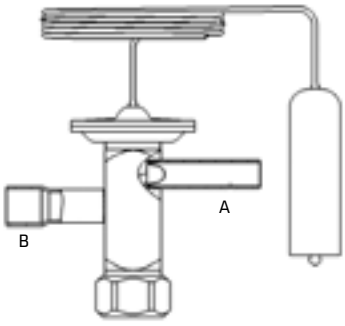


**Straight version**

# THERMOSTATIC EXPANSION VALVE

## TECHNICAL PARAMETERS

- RFGB valve available in straight shape with adjustable superheat on site
- RFGB valve available in angle shape with fixed factory superheat settings
- Both versions are available with the following solder connections
  - Metric: Inlet 6mm ODF/ Outlet 10mm ODF or Inlet 10mm ODF/ Outlet 12mm ODF
  - Imperial: Inlet 1/4" ODF/ Outlet 3/8" ODF or Inlet 3/8" ODF/ Outlet 1/2" ODF
- Equalization port available as option:
  - Metric: 6mm ODF (available for models with metric solder connections)
  - Imperial: 1/4" ODF (available for models with imperial solder connections)
- Capillary tube length 800mm

## MODEL DESIGNATION LEGEND

| Position Number | Model Designation Legend | |
|---|---|---|
| 1 | **Product Code** | **Product Series** |
| | RFGB | Thermostatic expansion valve with build-in orifice |
| 2 | **Refrigerant** | **Description** |
| | 06 | R290 |
| 3 | **Pressure Equalization** | **Description** |
| | E | External pressure equalization |
| | (Omitted) | Internal pressure equalization |
| 4 | **Capacity** | **Description** |
| | YY | Nominal valve capacity in tons (USRT) |
| 5 | **Internal Code** | **Description** |
| | 2XXX | Straight Layout + Internal consequential code |
| | 6XXX | Angle Layout + Internal consequential code |

# THERMOSTATIC EXPANSION VALVE

## MODEL DESIGNATION EXAMPLE

| Position Number | | | | | According to Model Designation Legend |
|---|---|---|---|---|---|
| 1 | 2 | 3 | 4 | 5 | |
| **RFGB** | 06 | E | 1.0 | xxxx | Thermostatic expansion valve with build-in orifice |
| RFGB | **06** | E | 1.0 | xxxx | Refrigerant: R290 |
| RFGB | 06 | **E** | 1.0 | xxxx | With connection for external pressure equalization |
| RFGB | 06 | E | **1.0** | xxxx | Capacity: Nominal value 1.0 USRT (3.5kW) |
| RFGB | 06 | E | 1.0 | **6xxx** | Angle Shape + Internal consequential code |

## MODELS DESIGNATION (VALVE HEAD)

| Code | Description |
|---|---|
| GB06E-0.17-2800 | Part number |
| -40/+10°C | Evaporating temperature (°C) |
| -40/+50°F | Evaporating temperature (°F) |
| R290 | Refrigerant |
| MWP 3.5Mpa | Max. Working Pressure (MPa) |
| MWP 505psig | Evaporating temperature (Psig) |

## TECHNICAL DATA

| Nominal Cooling Capacities[1)2)] | | | | |
|---|---|---|---|---|
| Refrigerant | Size | Valve Nomenclature | Capacity | |
| | | | [ USRT ] | [ kW ] |
| R290 | 0 | RFGB06(E)-0.17-xxx | 0,17 | 0,60 |
| | 1 | RFGB06(E)-0.35-xxx | 0,35 | 1,20 |
| | 2 | RFGB06(E)-0.7-xxx | 0,70 | 2,50 |
| | 3 | RFGB06(E)-1.0-xxx | 1,00 | 3,50 |
| | 4 | RFGB06(E)-1.5-xxx | 1,50 | 5,30 |
| | 5 | RFGB06(E)-2.0-xxx | 2,00 | 7,00 |

**Note:**

1) Nominal capacity valid for: - Version in straight shape and angle shape -
- Versions with metrical and imperial connections

2) Nominal working conditions: Condensing temperature: 38°C;
evaporating temperature +4,4°C;
Liquid temperature 37°C

# THERMOSTATIC EXPANSION VALVE

## MODEL LIST

*Table 1*

*Temperature **Range N: from -40°C to +10°C**, without MOP*
*Models with **Straight layout** and adjustable static superheat setting*
*Models with **Imperial Connections***
*Models with **External Equalization**: connection size 1/4" (*)*

| Valve Size | Capacity [kW] | Bleed [%] | Connection (Solder ODF) IN/OUT [inch] | Model Name [Internal Eq.] | Product Number (U11) [Internal Eq.] | Model Name [External Eq.]* | Product Number (U11) [External Eq.] |
|---|---|---|---|---|---|---|---|
| 0 | 0,6 | 15% | 1/4"; 3/8" | RFGB06-0.17-2xxx | On Request | RFGB06E-0.17-2xxx | On Request |
| 0 | 0,6 | 0% | 1/4"; 3/8" | RFGB06-0.17-2800 | 102052520 | RFGB06E-0.17-2840 | 102052671 |
| 0 | 0,6 | 0% | 3/8"; 1/2" | RFGB06-0.17-2880 | 102052638 | RFGB06E-0.17-2920 | 102052729 |
| 1 | 1,2 | 15% | 1/4"; 3/8" | RFGB06-0.35-2806 | On Request | RFGB06E-0.35-2xxx | On Request |
| 1 | 1,2 | 0% | 1/4"; 3/8" | RFGB06-0.35-2801 | 102052521 | RFGB06E-0.35-2841 | 102052672 |
| 1 | 1,2 | 0% | 3/8"; 1/2" | RFGB06-0.35-2881 | 102052508 | RFGB06E-0.35-2921 | 102052730 |
| 2 | 1,2 | 15% | 1/4"; 3/8" | RFGB06-0.7-2xxx | On Request | RFGB06E-0.7-2xxx | On Request |
| 2 | 2,5 | 0% | 1/4"; 3/8" | RFGB06-0.7-2802 | 102052522 | RFGB06E-0.7-2842 | 102052673 |
| 2 | 2,5 | 0% | 3/8"; 1/2" | RFGB06-0.7-2882 | 102052505 | RFGB06E-0.7-2922 | 102052731 |
| 3 | 3,5 | 15% | 1/4"; 3/8" | RFGB06-1.0-2808 | On Request | RFGB06E-1.0-2xxx | On Request |
| 3 | 3,5 | 0% | 1/4"; 3/8" | RFGB06-1.0-2803 | 102052540 | RFGB06E-1.0-2843 | 102052674 |
| 3 | 3,5 | 0% | 3/8"; 1/2" | RFGB06-1.0-2883 | 102052639 | RFGB06E-1.0-2923 | 102052732 |
| 4 | 5,3 | 15% | 1/4"; 3/8" | RFGB06-1.5-2807 | On Request | RFGB06E-1.5-2xxx | On Request |
| 4 | 5,3 | 0% | 1/4"; 3/8" | RFGB06-1.5-2804 | 102052541 | RFGB06E-1.5-2844 | 102052675 |
| 4 | 5,3 | 0% | 3/8"; 1/2" | RFGB06-1.5-2884 | 102052640 | RFGB06E-1.5-2924 | 102052733 |
| 5 | 7 | 0% | 1/4"; 3/8" | RFGB06-2.0-2805 | 102052542 | RFGB06E-2.0-2845 | 102052676 |
| 5 | 7 | 0% | 3/8"; 1/2" | RFGB06-2.0-2885 | 102052641 | RFGB06E-2.0-2925 | 102052441 |

# THERMOSTATIC EXPANSION VALVE

## MODEL LIST

*Table 2*

*Temperature **Range N: from -40°C to +10°C**, without MOP*
*Models with **Straight layout** and adjustable static superheat setting*
*Models with **Metric Connections***
*Models with **External Equalization**: connection size 6mm (*)*

| Valve Size | Capacity [kW] | Bleed [%] | Connection (Solder ODF) IN/OUT [mm] | Model Name [Internal Eq.] | Product Number (U11) [Internal Eq.] | Model Name [External Eq.]* | Product Number (U11) [External Eq.] |
|---|---|---|---|---|---|---|---|
| 0 | 0,6 | 15% | 6;10 | RFGB06-0.17-2xxx | On Request | RFGB06E-0.17-2xxx | On Request |
| 0 | 0,6 | 0% | 6;10 | RFGB06-0.17-2820 | 102052570 | RFGB06E-0.17-2860 | 102052706 |
| 0 | 0,6 | 0% | 10;12 | RFGB06-0.17-2900 | 102052605 | RFGB06E-0.17-2940 | 102052762 |
| 1 | 1,2 | 15% | 6;10 | RFGB06-0.35-2xxx | On Request | RFGB06E-0.35-2xxx | On Request |
| 1 | 1,2 | 0% | 6; 10 | RFGB06-0.35-2821 | 102052571 | RFGB06E-0.35-2861 | 102052707 |
| 1 | 1,2 | 0% | 10; 12 | RFGB06-0.35-2901 | 102052606 | RFGB06E-0.35-2941 | 102052763 |
| 2 | 2,5 | 15% | 6; 10 | RFGB06-0.7-2xxx | On Request | RFGB06E-0.7-2xxx | On Request |
| 2 | 2,5 | 0% | 6; 10 | RFGB06-0.7-2822 | 102052572 | RFGB06E-0.7-2862 | 102052708 |
| 2 | 2,5 | 0% | 10; 12 | RFGB06-0.7-2902 | 102052607 | RFGB06E-0.7-2942 | 102052764 |
| 3 | 3,5 | 15% | 6; 10 | RFGB06-1.0-2xxx | On Request | RFGB06E-1.0-2xxx | On Request |
| 3 | 3,5 | 0% | 6; 10 | RFGB06-1.0-2823 | 102052573 | RFGB06E-1.0-2863 | 102052709 |
| 3 | 3,5 | 0% | 10; 12 | RFGB06-1.0-2903 | 102052608 | RFGB06E-1.0-2943 | 102052765 |
| 4 | 5,3 | 0% | 6; 10 | RFGB06-1.5-2824 | 102052574 | RFGB06E-1.5-2864 | 102052710 |
| 4 | 5,3 | 0% | 10; 12 | RFGB06-1.5-2904 | 102052609 | RFGB06E-1.5-2944 | 102052766 |
| 5 | 7 | 0% | 6; 10 | RFGB06-2.0-2825 | 102052575 | RFGB06E-2.0-2865 | 102052711 |
| 5 | 7 | 0% | 10; 12 | RFGB06-2.0-2905 | 102052610 | RFGB06E-2.0-2945 | 102052767 |

**Note:**

1) Different evaporation temperature range on request
2) Extent of delivery: valve body and bulb strap
3) MOP function on request
4) Bleed function on request (5%, 10% or 15%)

# THERMOSTATIC EXPANSION VALVE

## DIMENSIONS STRAIGHT SHAPE VERSION

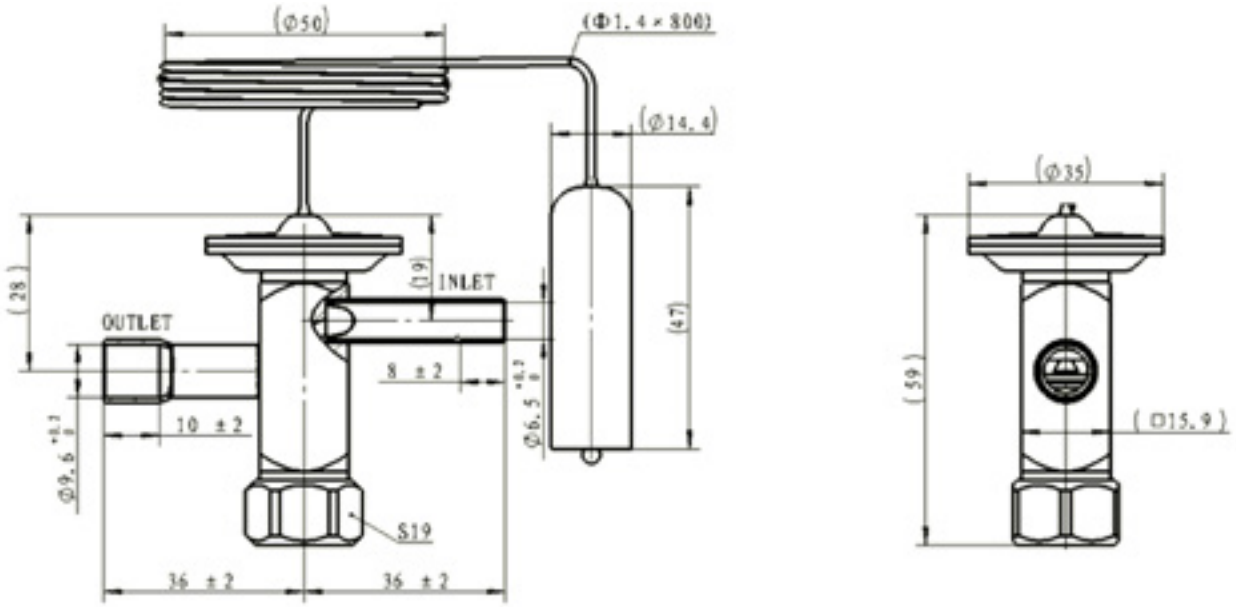


**Internal pressure equalization**

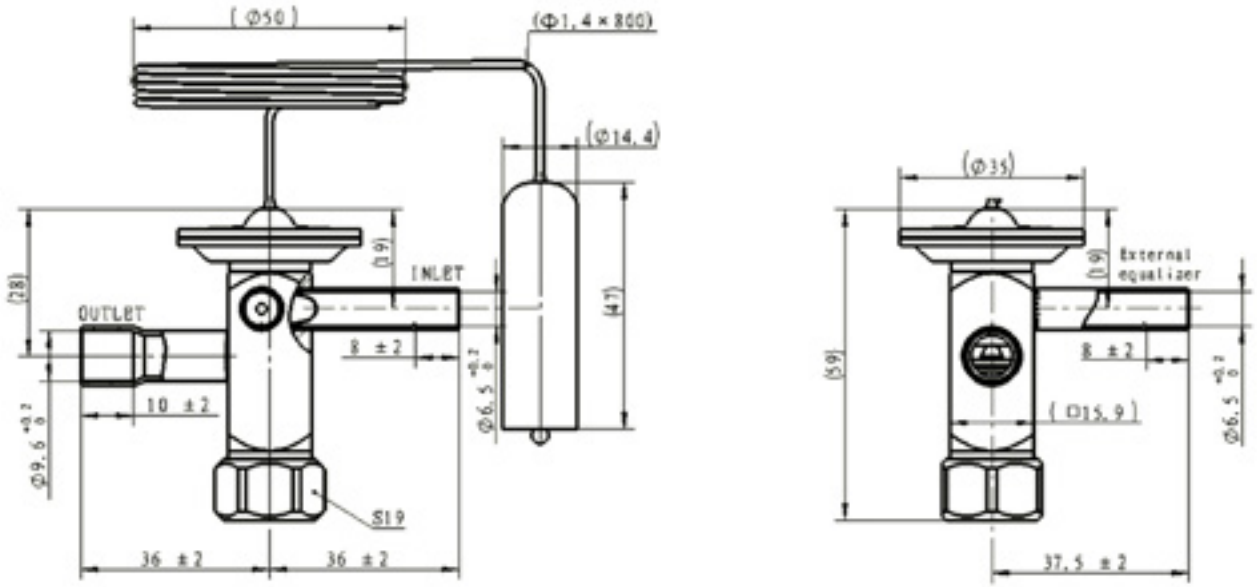


**External pressure equalization**

# THERMOSTATIC EXPANSION VALVE

## MODEL LIST

*Table 3*

*Temperature **Range N: from -40°C to +10°C**, without MOP*
*Models with **Angle layout** and fixed static super-heat setting*
*Models with **Imperial Connections***
*Models with **External Equalization**: connection size 1/4" (*)*

| Valve Size | Capacity [kW] | Bleed [%] | Connection (Solder ODF) IN/OUT [inch] | Model Name [Internal Eq.] | Product Number (U11) [Internal Eq.] | Model Name [External Eq.]* | Product Number (U11) [External Eq.] |
|---|---|---|---|---|---|---|---|
| 0 | 0,6 | 15% | 1/4"; 3/8" | RFGB06-0.17-6xxx | On Request | RFGB06E-0.17-6xxx | On Request |
| 0 | 0,6 | 0% | 1/4"; 3/8" | RFGB06-0.17-6800 | 102052797 | RFGB06E-0.17-6840 | 10205293 |
| 0 | 0,6 | 0% | 3/8"; 1/2" | RFGB06-0.17-6880 | 102052899 | RFGB06E-0.17-6920 | 102053004 |
| 1 | 1,2 | 15% | 1/4"; 3/8" | RFGB06-0.35-6xxx | On Request | RFGB06E-0.35-6xxx | On Request |
| 1 | 1,2 | 0% | 1/4"; 3/8" | RFGB06-0.35-6801 | 102052280 | RFGB06E-0.35-6841 | 102052935 |
| 1 | 1,2 | 0% | 3/8"; 1/2" | RFGB06-0.35-6881 | 102052900 | RFGB06E-0.35-6921 | 102053005 |
| 2 | 2,5 | 15% | 1/4"; 3/8" | RFGB06-0.7-6xxx | On Request | RFGB06E-0.7-6xxx | On Request |
| 2 | 2,5 | 0% | 1/4"; 3/8" | RFGB06-0.7-6802 | 102052798 | RFGB06E-0.7-6842 | 102052936 |
| 2 | 2,5 | 0% | 3/8"; 1/2" | RFGB06-0.7-6882 | 102052901 | RFGB06E-0.7-6922 | 102053006 |
| 3 | 3,5 | 15% | 1/4"; 3/8" | RFGB06-1.0-6xxx | On Request | RFGB0E6-1.0-6xxx | On Request |
| 3 | 3,5 | 0% | 1/4"; 3/8" | RFGB06-1.0-6803 | 102052799 | RFGB06E-1.0-6843 | 102052937 |
| 3 | 3,5 | 0% | 3/8"; 1/2" | RFGB06-1.0-6883 | 102052902 | RFGB06E-1.0-6923 | 102053007 |
| 4 | 5,3 | 0% | 1/4"; 3/8" | RFGB06-1.5-6804 | 102052800 | RFGB06E-1.5-6844 | 102052938 |
| 4 | 5,3 | 0% | 3/8"; 1/2" | RFGB06-1.5-6884 | 102052903 | RFGB06E-1.5-6924 | 102053008 |
| 5 | 7 | 0% | 1/4"; 3/8" | RFGB06-2.0-6805 | 102052801 | RFGB06E-2.0-6845 | 102052939 |
| 5 | 7 | 0% | 3/8"; 1/2" | RFGB06-2.0-6885 | 102052904 | RFGB06E-2.0-6925 | 102053009 |

# THERMOSTATIC EXPANSION VALVE

## MODEL LIST

*Table 4*

*Temperature **Range N: from -40°C to +10°C**, without MOP*
*Models with **Angle layout** and fixed static super-heat setting*
*Models with **Metric Connections***
*Models with **External Equalization**: connection size 6mm (*)*

| Valve Size | Capacity [kW] | Bleed [%] | Connection (Solder ODF) IN/OUT [mm] | Model Name [Internal Eq.] | Product Number (U11) [Internal Eq.] | Model Name [External Eq.]* | Product Number (U11) [External Eq.] |
|---|---|---|---|---|---|---|---|
| 0 | 0,6 | 15% | 6; 10 | RFGB06-0.17-6xxx | On Request | RFGB06E-0.17-6xxx | On Request |
| 0 | 0,6 | 0% | 6; 10 | RFGB06-0.17-6820 | 102052830 | RFGB06E-0.17-6860 | 102052969 |
| 0 | 0,6 | 0% | 10; 12 | RFGB06-0.17-6900 | 102052865 | RFGB06E-0.17-6940 | 102053039 |
| 1 | 1,2 | 15% | 6; 10 | RFGB06-0.35-6828 | On Request | RFGB06E-0.35-6xxx | On Request |
| 1 | 1,2 | 0% | 6; 10 | RFGB06-0.35-6821 | 102052831 | RFGB06E-0.35-6861 | 102052970 |
| 1 | 1,2 | 0% | 10; 12 | RFGB06-0.35-6901 | 102052866 | RFGB06E-0.35-6941 | 102053040 |
| 2 | 2,5 | 15% | 6; 10 | RFGB06-0.7-6xxx | On Request | RFGB06E-0.7-6xxx | On Request |
| 2 | 2,5 | 0% | 6; 10 | RFGB06-0.7-6822 | 102052832 | RFGB06E-0.7-6862 | 102052971 |
| 2 | 2,5 | 0% | 10; 12 | RFGB06-0.7-6902 | 102052867 | RFGB06E-0.7-6942 | 102053041 |
| 3 | 3,5 | 15% | 6; 10 | RFGB06-1.0-6xxx | On Request | RFGB06E-1.0-6xxx | On Request |
| 3 | 3,5 | 0% | 6; 10 | RFGB06-1.0-6823 | 102052833 | RFGB06E-1.0-6863 | 102052972 |
| 3 | 3,5 | 0% | 10; 12 | RFGB06-1.0-6903 | 102052868 | RFGB06E-1.0-6943 | 102053042 |
| 4 | 5,3 | 0% | 6; 10 | RFGB06-1.5-6824 | 102052834 | RFGB06E-1.5-6864 | 102052834 |
| 4 | 5,3 | 0% | 10; 12 | RFGB06-1.5-6904 | 102052869 | RFGB06E-1.5-6944 | 102053043 |
| 5 | 7 | 0% | 6; 10 | RFGB06-2.0-6825 | 102052835 | RFGB06E-2.0-6865 | 102052974 |
| 5 | 7 | 0% | 10; 12 | RFGB06-2.0-6905 | 102052870 | RFGB06E-2.0-6945 | 102053044 |

**Note:**

1) Different evaporation temperature range on request
2) Extent of delivery: valve body and bulb strap
3) MOP function on request
4) Bleed function on request (5%, 10% or 15%)

# THERMOSTATIC EXPANSION VALVE

## DIMENSIONS - ANGLE SHAPE VERSION

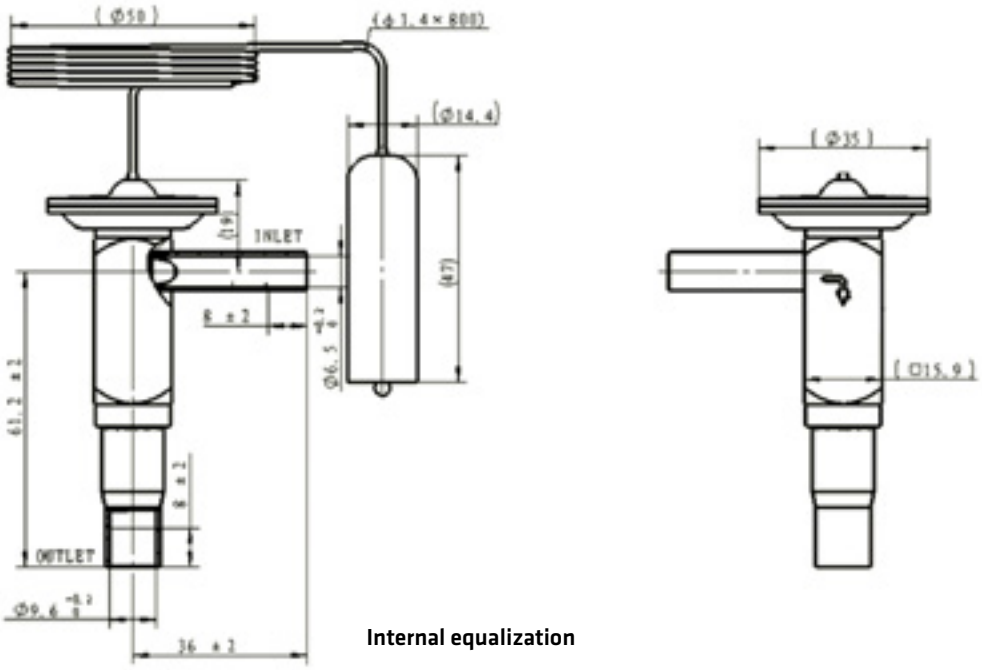


**Internal equalization**

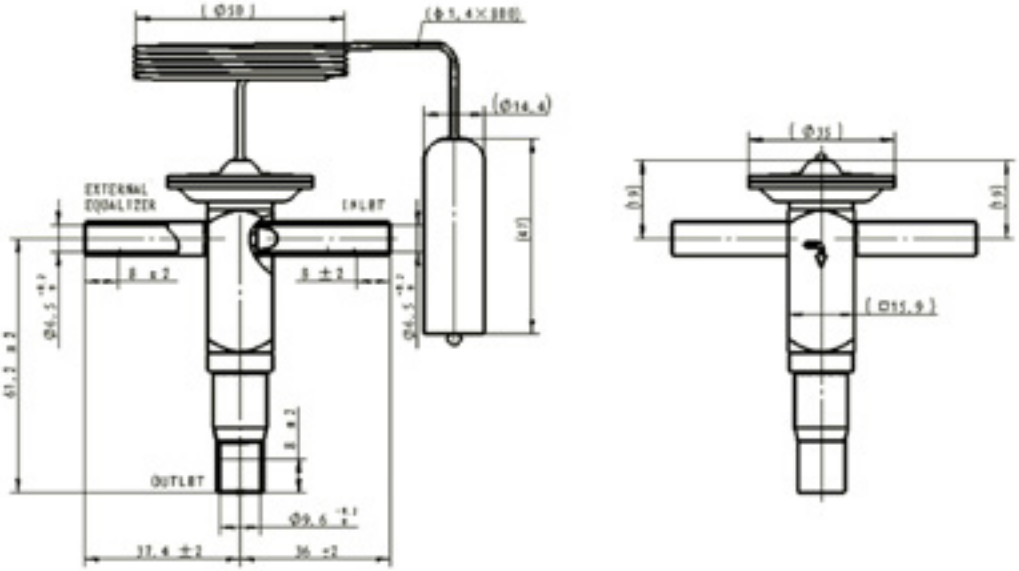


**External equalization**

# THERMOSTATIC EXPANSION VALVE

## ACCESSORIES

*All the RFGB06 models listed in this datasheet are equipped with stainless-steel clips suitable to fix the sensitive element (bulb) to the suction line piping. The standard clip matches pipes with diameters 9.52mm (3/8”). Clips suitable for pipes with different diameters can be ordered as accessories: models and ordering codes are visible in the table below. As an alternative Sanhua offers a stainless-steel stripe to fix the bulb suitable for a wide range of pipe diameters.*

| Picture | Type / Pipe | Model | Ordering Number (U11) | Quantity per Pack |
|---|---|---|---|---|
| | Stripe | RFK-000-019013 | 20201012702 | 160 |
| 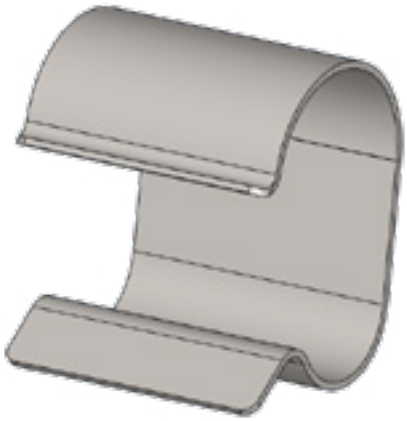 | Clip [6 mm] | RFK-000-025024 | 20205202201 | 500 |
| | Clip [8 mm] | RFK-000-025022 | 20205202001 | |
| | Clip [10 mm] | RFK-000-025021 | 20205201901 | |
| | Clip [12 mm] | RFK-000-025023 | 20205202101 | |
| | Clip [1/4”] | RFK-000-025024 | 20205202201 | |
| | Clip [5/16" mm] | RFK-000-025022 | 20205202001 | |
| | Clip [3/8" mm] | RFK-000-025021 | 20205201901 | |
| | Clip [1/2" mm] | RFK-000-025023 | 20205202101 | |

***RFGD*** *SERIES*

# THERMOSTATIC EXPANSION VALVE

RFGD series thermostatic expansion valves are used to adjust mass flow of refrigerant into the evaporator while controlling the refrigerant´s superheat at the outlet of the evaporator. They can be used for various refrigerants under all working conditions. Typical applications are refrigeration systems like commercial refrigerators and freezers, icemakers, dehumidifiers as well as air conditioners at various evaporation temperatures.

## FEATURES

- COMPACT DESIGN WITH BUILD-IN ORIFICE
- DOUBLE DIAPHRAGM DESIGN
- WARM THERMO HEAD CONSTRUCTION
- ALL CONNECTIONS PIPES ARE COMPLETELY IN COPPER
- VALVES WITH MOP FUNCTION CAN BE PROVIDED TO ASSURE RELIABLE COMPRESSOR OPERATION
- APPLICABLE IN A WIDE EVAPORATION TEMPERATURE RANGE
- RELIABLE AND CONSISTENT PERFORMANCE OF SUPERHEAT CONTROL
- BALANCED PORT – SUITABLE FOR REVERSIBLE CYCLES
- THERMAL BULB UTILIZES CROSS CHARGE TECHNOLOGY, PROVIDING CONSISTENT SUPERHEAT DEGREE OVER THE WHOLE EVAPORATION TEMPERATURE RANGE
- WIDE CAPACITIES RANGE SPLIT IN 9 ORIFICES SIZES:
  - RFGD10: (ORIFICES 1 TO 6)
  - RFGD20: (ORIFICES 7 TO 9)

### GENERAL SPECIFICATION

- Applicable for all common HCFC and HFC refrigerants such as: R22, R134a, R404A, R507A, R407C, R410A; R448A/R449A, R452A, R513A, R407A with an appropriate SH adjustment
- Ambient temperature min./max.: -35/+55°C
- Medium temperature TS min./max.: -40°C / +70°C
- Max. operating pressure PS: 4.8 Mpa[1)]
- Installation position:
  - Preferably valve head upwards
  - Main flow direction from inlet A to outlet B
- Certifications: UL/CSA and PED declaration

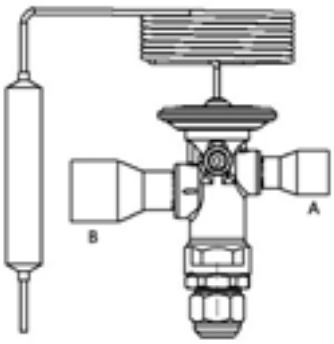

# THERMOSTATIC EXPANSION VALVE

## TECHNICAL PARAMETERS

- RFGD valves are available in straight shape with adjustable superheat on site
- RFGD valves are available with the different solder and flare connections (see more details in following tables)
- RFGD valves are available with 2 different temperature ranges:
  - from -40°C to +10°C
  - from -25°C to +10°C
- Equalization port available as option:
  - Metric: 6mm ODF (available for models with metric solder connections)
  - Imperial: 1/4" ODF (available for models with imperial solder connections)
- Capillary tube length 1500mm as standard. Different length customizable on request.
- Standard MOP values:
  - T. range -40°C to +10°C: MOP: +15°C or MOP not present
  - T. range -25°C to +10°C: MOP: +15°C

## MODEL DESIGNATION LEGEND

| Position Number | Model Designation Legend | |
|---|---|---|
| 1 | **Product Code** | **Product Series** |
| | RFGD | Thermostatic expansion valve with build-in orifice |
| 2 | **Refrigerant** | **Description** |
| | 1 | R22 |
| | 2 | R407C |
| | 3 | R404A / R507 |
| | 4 | R134a |
| | 5 | R410A |
| 3 | **Pressure Equalization** | **Description** |
| | E | External pressure equalization |
| | (Omitted) | Internal pressure equalization |
| 4 | **Capacity** | **Description** |
| | X.X | Nominal valve capacity in tons |
| 5 | **Miscellaneous** | **Description** |
| | xxx | Digits for additional information |

# THERMOSTATIC EXPANSION VALVE

## MODEL DESIGNATION EXAMPLE

| Position Number | | | | | According to Model Designation Legend |
|---|---|---|---|---|---|
| 1 | 2 | 3 | 4 | 5 | |
| **RFGD** | 04 | E | 1.5 | xxx | Thermostatic expansion valve with build-in orifice |
| RFGD | **04** | E | 1.5 | xxx | Refrigerant: R134a |
| RFGD | 04 | **E** | 1.5 | xxx | With connection for external pressure equalization |
| RFGD | 04 | E | **1.5** | xxx | Capacity: Valve and orifice size **3** |
| RFGD | 04 | E | 1.5 | **xxx** | Digits for additional information |

## MODELS DESIGNATION (VALVE HEAD)

| Code | Description |
|---|---|
| GD04E-1.5-1601 | Model |
| -40/10°C | Evaporating temperature (°C) |
| -40/+50°F | Evaporating temperature (°F) |
| R134a | Refrigerant |
| MWP 4.8 Mpa | Max. Working Pressure (MPa) |
| MWP 695 psig | Max. Working Pressure (Psig) |

# THERMOSTATIC EXPANSION VALVE

## TECHNICAL DATA

*Nominal Capacities*[1]

| R22 | | | R407C[2)] | | | R404A / R507A | | | R134a | | | R410A | | |
|---|---|---|---|---|---|---|---|---|---|---|---|---|---|---|
| PS: 2,8 MPa | | | PS: 2,8 MPa | | | PS: 3,5 MPa | | | PS: 2,1 MPa | | | PS: 4,5 MPa | | |
| Model Name[3)] | Capacity | | Model Name[3)] | Capacity | | Model Name[3)] | Capacity | | Model Name[3)] | Capacity | | Model Name[3)] | Capacity | |
| | [USRT] | [kW] | | [USRT] | [kW] | | [USRT] | [kW] | | [USRT] | [kW] | | [USRT] | [kW] |
| RFGD 01(E)-1 | 3,0 | 10,6 | RFGD 02(E)-1 | 2,5 | 8,8 | RFGD 03(E)-1 | 2,0 | 7,0 | RFGD 04(E)-1 | 1,5 | 5,3 | RFGD 05(E)-1 | 3,5 | 12,3 |
| RFGD 01(E)-2 | 4,0 | 14,1 | RFGD 02(E)-2 | 3,5 | 12,3 | RFGD 03(E)-2 | 2,5 | 8,8 | RFGD 04(E)-2 | 2,5 | 8,8 | RFGD 05(E)-2 | 4,5 | 15,8 |
| RFGD 01(E)-3 | 6,0 | 12,1 | RFGD 02(E)-3 | 5,0 | 17,6 | RFGD 03(E)-3 | 4,0 | 14,1 | RFGD 04(E)-3 | 3,5 | 12,3 | RFGD 05(E)-3 | 6,5 | 22,9 |
| RFGD 01(E)-4 | 7,5 | 26,4 | RFGD 02(E)-4 | 7,0 | 24,6 | RFGD 03(E)-4 | 5,0 | 17,6 | RFGD 04(E)-4 | 4,5 | 15,8 | RFGD 05(E)-4 | 9,0 | 31,7 |
| RFGD 01(E)-5 | 9,0 | 31,7 | RFGD 02(E)-5 | 8,5 | 29,9 | RFGD 03(E)-5 | 6,0 | 21,1 | RFGD 04(E)-5 | 5,5 | 19,3 | RFGD 05(E)-5 | 11,0 | 38,7 |
| RFGD 01(E)-6 | 11,0 | 38,7 | RFGD 02(E)-6 | 10,0 | 35,2 | RFGD 03(E)-6 | 7,5 | 26,4 | RFGD 04(E)-6 | 7,0 | 24,6 | RFGD 05(E)-6 | 13,0 | 45,7 |
| RFGD 01(E)-7 | 12,0 | 42,2 | RFGD 02(E)-7 | 12,0 | 42,2 | RFGD 03(E)-7 | 9,0 | 31,7 | RFGD 04(E)-7 | 8,0 | 28,1 | RFGD 05(E)-7 | 15,0 | 52,8 |
| RFGD 01(E)-8 | 15,0 | 52,8 | RFGD 02(E)-8 | 15,0 | 52,8 | RFGD 03(E)-8 | 11,0 | 38,7 | RFGD 04(E)-8 | 10,0 | 35,2 | RFGD 05(E)-8 | 19,0 | 66,8 |
| RFGD 01(E)-9 | 18,0 | 63,3 | RFGD 02(E)-9 | 18,0 | 63,3 | RFGD 03(E)-9 | 13,0 | 45,7 | RFGD 04(E)-9 | 12,0 | 42,2 | RFGD 05(E)-9 | 23,0 | 80,9 |

**Note:**

1) Nominal capacities referred at the following working conditions:
Condensing temperature: 38°C; evaporating temperature +4,4°C; Liquid temperature 37°C
Static Super Heating: 4 K

2) R407C data based on dew point conditions

3) Model Name in this table is referred to the first 4 positions of the model designation

# THERMOSTATIC EXPANSION VALVE

## RFGD MODELS

*RFGD range allow high level of customization on request considering parameters indicated in table below.*
*Contact Sanhua to request specific model not included on standard range.*

| Model Name | | | | | | | | | | Temperature Range | |
|---|---|---|---|---|---|---|---|---|---|---|---|
| Refrigerant | Valve Body | Capacity Size | Inlet | | Outlet | | Pressure Equal. | | | -40°C to +10°C | -25°C to +10°C |
| | | | [mm] | [inch] | [mm] | [inch] | w/equal | [mm] | [inch] | | |
| R22<br>R407C<br>R404A/R507<br>R134a<br>R410A | RFGD01<br>RFGD02<br>RFGD03<br>RFGD04<br>RFGD05 | 1-<br>2-<br>3-<br>4-<br>5-<br>6- | 10 | - | 16 | - | - | 6 | - | No MOP | MOP:<br>+15°C |
| | | | 12 | - | 22 | - | | 6 | - | | |
| | | | 16 | | 22 | | | 6 | - | | |
| | | | - | 3/8 | - | 5/8 | | - | 1/4 | | |
| | | | - | 1/2 | - | 7/8 | | - | 1/4 | | |
| | | | | 5/8 | | 7/8 | | - | 1/4 | | |
| | | 7-<br>8-<br>9- | 16 | | 22 | | | 6 | | | |
| | | | 16 | | 28 | | | 6 | | | |
| | | | 16 | | 28 | | | 6 | | | |
| | | | 22 | | 28 | | | 6 | | | |
| | | | 22 | | 28 | | | 6 | | | |
| | | | 22 | | 35 | | | 6 | | | |
| | | | | 5/8 | | 7/8 | | | 1/4 | | |
| | | | | 5/8 | | 1-1/8 | | | 1/4 | | |
| | | | | 5/8 | | 1-1/8 | | | 1/4 | | |
| | | | | 7/8 | | 1-1/8 | | | 1/4 | | |
| | | | | 7/8 | | 1-1/8 | | | 1/4 | | |
| | | | | 7/8 | | 1-3/8 | | | 1/4 | | |

# THERMOSTATIC EXPANSION VALVE

## RFGD STANDARD RANGE

*A) Models with Metric Connections*

*RFGD10 (orifice 1-6) -40°C to +10°C (Models without MOP)*

| Ref. | Valve Body | Capacity Size All Sizes | Connections IN x OUT | | Pressure Equal. | Model Name | Product Number U11 Code Multi-Pack |
|---|---|---|---|---|---|---|---|
| | | | Metric | [mm] | [mm] | | |
| R407C | RFGD 02E | 1 - | M10/16 | 10 x 16 | 6 | RFGD02E-2.5-1202 | 10205200202 |
| | | 2 - | M12/22 | 12 x 22 | 6 | RFGD02E-3.5-1206 | 10205200402 |
| | | 3 - | M12/22 | 12 x 22 | 6 | RFGD02E-5.0-1212 | 10205200602 |
| | | 4 - | M16/22 | 12 x 22 | 6 | RFGD02E-7.0-1219 | 10205200802 |
| | | 5 - | M16/22 | 16 x 22 | 6 | RFGD02E-8.5-1221 | 10205201002 |
| | | 6 - | M16/22 | 16 x 22 | 6 | RFGD02E-10.0-1224 | 10205234502 |
| R404A / R507 | RFGD 03E | 1 - | M10/16 | 10 x 16 | 6 | RFGD03E-2.0-1402 | 10205240402 |
| | | 2 - | M12/22 | 12 x 22 | 6 | RFGD03E-2.5-1404 | 10205235202 |
| | | 3 - | M12/22 | 12 x 22 | 6 | RFGD03E-4.0-1408 | 10205235402 |
| | | 4 - | M16/22 | 12 x 22 | 6 | RFGD03E-5.0-1411 | 10205235602 |
| | | 5 - | M16/22 | 16 x 22 | 6 | RFGD03E-6.0-1414 | 10205235802 |
| | | 6 - | M16/22 | 16 x 22 | 6 | RFGD03E-7.5-1417 | 10205235902 |
| R134a | RFGD 04E | 1 - | M10/16 | 10 x 16 | 6 | RFGD04E-1.5-1601 | 10205240602 |
| | | 2 - | M12/22 | 12 x 22 | 6 | RFGD04E-2.5-1604 | 10205236102 |
| | | 3 - | M12/22 | 12 x 22 | 6 | RFGD04E-3.5-1609 | 10205236202 |
| | | 4 - | M16/22 | 12 x 22 | 6 | RFGD04E-4.5-1613 | 10205236302 |
| | | 5 - | M16/22 | 16 x 22 | 6 | RFGD04E-5.5-1616 | 10205236402 |
| | | 6 - | M16/22 | 16 x 22 | 6 | RFGD04E-7.0-1618 | 10205236502 |
| R410A | RFGD 05E | 1 - | M10/16 | 10 x 16 | 6 | RFGD05E-3.5-1802 | 10205231402 |
| | | 2 - | M12/22 | 12 x 22 | 6 | RFGD05E-4.5-1806 | 10205236602 |
| | | 3 - | M12/22 | 12 x 22 | 6 | RFGD05E-6.5-1812 | 10205236802 |
| | | 4 - | M16/22 | 16 x 22 | 6 | RFGD05E-9.0-1816 | 10205236902 |
| | | 5 - | M16/22 | 16 x 22 | 6 | RFGD05E-11.0-1819 | 10205220202 |
| | | 6 - | M16/22 | 16 x 22 | 6 | RFGD05E-13.0-1824 | 10205220302 |

# THERMOSTATIC EXPANSION VALVE

## RFGD STANDARD RANGE

*B) Models with Metric Connections*

*RFGD20 (orifice 7-9) -40°C to +10°C (Models without MOP)*

| Ref. | Valve Body | Capacity Size All Sizes | Connections IN x OUT | | Pressure Equal. | Model Name | Product Number U11 Code Multi-Pack |
|---|---|---|---|---|---|---|---|
| | | | Metric | [mm] | [mm] | | |
| R407C | RFGD 02E | 7 - | M16/22 | 16 x 22 | 6 | RFGD02E-12.0-565 | 10205065202 |
| | | 7 - | M16/28 | 16 x 28 | 6 | RFGD02E-12.0-544 | 10205057502 |
| | | 8 - | M16/28 | 16 x 28 | 6 | RFGD02E-15.0-546 | 10205057702 |
| | | 8 - | M22/28 | 22 x 28 | 6 | RFGD02E-15.0-548 | 10205057902 |
| | | 9 - | M22/28 | 22 x 28 | 6 | RFGD02E-18.0-550 | 10205058102 |
| | | 9 - | M22/35 | 22 x 35 | 6 | RFGD02E-18.0-566 | 10205065302 |
| R404A / R507 | RFGD 03E | 7 - | M16/22 | 16 x 22 | 6 | RFGD03E-9.0-563 | 10205066502 |
| | | 7 - | M16/28 | 16 x 28 | 6 | RFGD03E-9.0-534 | 10205056502 |
| | | 8 - | M16/28 | 16 x 28 | 6 | RFGD03E-11.0-536 | 10205056702 |
| | | 8 - | M22/28 | 22 x 28 | 6 | RFGD03E-11.0-538 | 10205056902 |
| | | 9 - | M22/28 | 22 x 28 | 6 | RFGD03E-13.0-540 | 10205057102 |
| | | 9 - | M22/35 | 22 x 35 | 6 | RFGD03E-13.0-564 | 10205065102 |
| R134a | RFGD 04E | 7 - | M16/22 | 16 x 22 | 6 | RFGD04E-8.0-559 | 10205066102 |
| | | 7 - | M16/28 | 16 x 28 | 6 | RFGD04E-8.0-503 | 10205054302 |
| | | 8 - | M16/28 | 16 x 28 | 6 | RFGD04E-10.0-515 | 10205054502 |
| | | 8 - | M22/28 | 22 x 28 | 6 | RFGD04E-10.0-521 | 10205054702 |
| | | 9 - | M22/28 | 22 x 28 | 6 | RFGD04E-12.0-523 | 10205054902 |
| | | 9 - | M22/35 | 22 x 35 | 6 | RFGD04E-12.0-560 | 10205066202 |
| R410A | RFGD 05E | 7 - | M16/22 | 16 x 22 | 6 | RFGD05E-15.0-567 | 10205065402 |
| | | 7 - | M16/28 | 16 x 28 | 6 | RFGD05E-15.0-552 | 10205058502 |
| | | 8 - | M16/28 | 16 x 28 | 6 | RFGD05E-19.0-553 | 10205058702 |
| | | 8 - | M22/28 | 22 x 28 | 6 | RFGD05E-19.0-554 | 10205058902 |
| | | 9 - | M22/28 | 22 x 28 | 6 | RFGD05E-23.0-556 | 10205059102 |
| | | 9 - | M22/35 | 22 x 35 | 6 | RFGD05E-23.0-568 | 10205065502 |

# THERMOSTATIC EXPANSION VALVE

## RFGD STANDARD RANGE

*C) Models with Metric Connections*
*RFGD20 (orifice 7-9) -25°C to +10°C with MOP +15°C*

| Ref. | Valve Body | Capacity Size All Sizes | Connections IN x OUT | | Pressure Equal. | Model Name | Product Number U11 Code Multi-Pack |
|---|---|---|---|---|---|---|---|
| | | | Metric | [mm] | [mm] | | |
| R407C | RFGD 02E | 7 - | M16/22 | 16 x 22 | 6 | RFGD02E-12.0-663 | 10205064702 |
| | | 7 - | M16/28 | 16 x 28 | 6 | RFGD02E-12.0-639 | 10205062802 |
| | | 8 - | M16/28 | 16 x 28 | 6 | RFGD02E-15.0-641 | 10205063002 |
| | | 8 - | M22/28 | 22 x 28 | 6 | RFGD02E-15.0-643 | 10205063202 |
| | | 9 - | M22/28 | 22 x 28 | 6 | RFGD02E-18.0-645 | 10205063402 |
| | | 9 - | M22/35 | 22 x 35 | 6 | RFGD02E-18.0-664 | 10205064802 |
| R404A / R507 | RFGD 03E | 7 - | M16/22 | 16 x 22 | 6 | RFGD03E-9.0-661 | 10205066002 |
| | | 7 - | M16/28 | 16 x 28 | 6 | RFGD03E-9.0-629 | 10205061802 |
| | | 8 - | M16/28 | 16 x 28 | 6 | RFGD03E-11.0-631 | 10205062002 |
| | | 8 - | M22/28 | 22 x 28 | 6 | RFGD03E-11.0-633 | 10205062202 |
| | | 9 - | M22/28 | 22 x 28 | 6 | RFGD03E-13.0-635 | 10205062402 |
| | | 9 - | M22/35 | 22 x 35 | 6 | RFGD03E-13.0-662 | 10205064602 |
| R134a | RFGD 04E | 7 - | M16/22 | 16 x 22 | 6 | RFGD04E-8.0-657 | 10205065602 |
| | | 7 - | M16/28 | 16 x 28 | 6 | RFGD04E-8.0-603 | 10205059402 |
| | | 8 - | M16/28 | 16 x 28 | 6 | RFGD04E-10.0-605 | 10205059602 |
| | | 8 - | M22/28 | 22 x 28 | 6 | RFGD04E-10.0-607 | 10205059802 |
| | | 9 - | M22/28 | 22 x 28 | 6 | RFGD04E-12.0-609 | 10205060002 |
| | | 9 - | M22/35 | 22 x 35 | 6 | RFGD04E-12.0-658 | 10205065702 |
| R410A | RFGD 05E | 7 - | M16/22 | 16 x 22 | 6 | RFGD05E-15.0-665 | 10205064902 |
| | | 7 - | M16/28 | 16 x 28 | 6 | RFGD05E-15.0-649 | 10205063802 |
| | | 8 - | M16/28 | 16 x 28 | 6 | RFGD05E-19.0-651 | 10205064002 |
| | | 8 - | M22/28 | 22 x 28 | 6 | RFGD05E-19.0-653 | 10205064202 |
| | | 9 - | M22/28 | 22 x 28 | 6 | RFGD05E-23.0-655 | 10205064402 |
| | | 9 - | M22/35 | 22 x 35 | 6 | RFGD05E-23.0-666 | 10205065002 |

# THERMOSTATIC EXPANSION VALVE

## RFGD STANDARD RANGE

*D) Models with Imperial Connections*

*RFGD10 (orifice 1-6) -40°C to +10°C (Models without MOP)*

| Ref. | MWP [ MPa ] | Valve Body | Capacity Size All Sizes | Connections IN x OUT | | Pressure Equal. | Model Name | Product Number U11 Code Multi-Pack |
|---|---|---|---|---|---|---|---|---|
| | | | | Imperial | [inch] | [inch] | | |
| R407C | 2,8 | RFGD 02E | 1 - | 3/5 | 3/8 x 5/8 | 1/4 | RFGD02E-2.5-1200 | 10205200102 |
| | | | 2 - | 4/7 | 1/2 x 7/8 | 1/4 | RFGD02E-3.5-1205 | 10205200302 |
| | | | 3 - | 4/7 | 1/2 x 7/8 | 1/4 | RFGD02E-5.0-1209 | 10205200502 |
| | | | 4 - | 5/7 | 5/8 x 7/8 | 1/4 | RFGD02E-7.0-1217 | 10205200702 |
| | | | 5 - | 5/7 | 5/8 x 7/8 | 1/4 | RFGD02E-8.5-1220 | 10205200902 |
| | | | 6 - | 5/7 | 5/8 x 7/8 | 1/4 | RFGD02E-10.0-1222 | 10205215102 |
| R404A / R507 | 3,5 | RFGD 03E | 1 - | 3/5 | 3/8 x 5/8 | 1/4 | RFGD03E-2.0-1401 | 10205240302 |
| | | | 2 - | 4/7 | 1/2 x 7/8 | 1/4 | RFGD03E-2.5-1403 | 10205235102 |
| | | | 3 - | 4/7 | 1/2 x 7/8 | 1/4 | RFGD03E-4.0-1407 | 10205235302 |
| | | | 4 - | 5/7 | 5/8 x 7/8 | 1/4 | RFGD03E-5.0-1410 | 10205235502 |
| | | | 5 - | 5/7 | 5/8 x 7/8 | 1/4 | RFGD03E-6.0-1413 | 10205235702 |
| | | | 6 - | 5/7 | 5/8 x 7/8 | 1/4 | RFGD03E-7.5-1416 | 10205215002 |
| R134a | 2,1 | RFGD 04E | 1 - | 3/5 | 3/8 x 5/8 | 1/4 | RFGD04E-1.5-1600 | 10205240502 |
| | | | 2 - | 4/7 | 1/2 x 7/8 | 1/4 | RFGD04E-2.5-1603 | 10205236002 |
| | | | 3 - | 4/7 | 1/2 x 7/8 | 1/4 | RFGD04E-3.5-1607 | 10205220902 |
| | | | 4 - | 5/7 | 5/8 x 7/8 | 1/4 | RFGD04E-4.5-1612 | 10205221002 |
| | | | 5 - | 5/7 | 5/8 x 7/8 | 1/4 | RFGD04E-5.5-1615 | 10205221102 |
| | | | 6 - | 5/7 | 5/8 x 7/8 | 1/4 | RFGD04E-7.0-1617 | 10205221202 |
| R410A | 4,5 | RFGD 05E | 1 - | 3/5 | 3/8 x 5/8 | 1/4 | RFGD05E-3.5-1800 | 10205231302 |
| | | | 2 - | 4/7 | 1/2 x 7/8 | 1/4 | RFGD05E-4.5-1805 | 10205233502 |
| | | | 3 - | 4/7 | 1/2 x 7/8 | 1/4 | RFGD05E-6.5-1809 | 10205236702 |
| | | | 4 - | 5/7 | 5/8 x 7/8 | 1/4 | RFGD05E-9.0-1815 | 10205217402 |
| | | | 5 - | 5/7 | 5/8 x 7/8 | 1/4 | RFGD05E-11.0-1818 | 10205215302 |
| | | | 6 - | 5/7 | 5/8 x 7/8 | 1/4 | RFGD05E-13.0-1822 | 10205215402 |

# THERMOSTATIC EXPANSION VALVE

## RFGD STANDARD RANGE

*E) Models with Imperial Connections*

*RFGD20 (orifice 7-9) -40°C to +10°C (Models without MOP)*

| Ref. | Valve Body | Capacity Size All Sizes | Connections IN x OUT | | Pressure Equal. | Model Name | Product Number U11 Code Multi-Pack |
|---|---|---|---|---|---|---|---|
| | | | Imperial | [inch] | [inch] | | |
| R407C | RFGD 02E | 7 - | 5/7 | 5/8 x 7/8 | 1/4 | RFGD02E-12.0-542 | 10205057302 |
| | | 7 - | 5/9 | 5/8 x 1-1/8 | 1/4 | RFGD02E-12.0-543 | 10205057402 |
| | | 8 - | 5/9 | 5/8 x 1-1/8 | 1/4 | RFGD02E-15.0-545 | 10205057602 |
| | | 8 - | 7/9 | 7/8 x 1-1/8 | 1/4 | RFGD02E-15.0-547 | 10205057802 |
| | | 9 - | 7/9 | 7/8 x 1-1/8 | 1/4 | RFGD02E-18.0-549 | 10205058002 |
| | | 9 - | 7/11 | 7/8 x 1-3/8 | 1/4 | RFGD02E-18.0-551 | 10205058202 |
| R404A / R507 | RFGD 03E | 7 - | 5/7 | 5/8 x 7/8 | 1/4 | RFGD03E-9.0-532 | 10205056302 |
| | | 7 - | 5/9 | 5/8 x 1-1/8 | 1/4 | RFGD03E-9.0-533 | 10205056402 |
| | | 8 - | 5/9 | 5/8 x 1-1/8 | 1/4 | RFGD03E-11.0-535 | 10205056602 |
| | | 8 - | 7/9 | 7/8 x 1-1/8 | 1/4 | RFGD03E-11.0-537 | 10205056802 |
| | | 9 - | 7/9 | 7/8 x 1-1/8 | 1/4 | RFGD03E-13.0-539 | 10205057002 |
| | | 9 - | 7/11 | 7/8 x 1-3/8 | 1/4 | RFGD03E-13.0-541 | 10205057202 |
| R134a | RFGD 04E | 7 - | 5/7 | 5/8 x 7/8 | 1/4 | RFGD04E-8.0-501 | 10205054102 |
| | | 7 - | 5/9 | 5/8 x 1-1/8 | 1/4 | RFGD04E-8.0-502 | 10205054202 |
| | | 8 - | 5/9 | 5/8 x 1-1/8 | 1/4 | RFGD04E-10.0-504 | 10205054402 |
| | | 8 - | 7/9 | 7/8 x 1-1/8 | 1/4 | RFGD04E-10.0-520 | 10205054602 |
| | | 9 - | 7/9 | 7/8 x 1-1/8 | 1/4 | RFGD04E-12.0-522 | 10205054802 |
| | | 9 - | 7/11 | 7/8 x 1-3/8 | 1/4 | RFGD04E-12.0-524 | 10205055002 |
| R410A | RFGD 05E | 7 - | 5/7 | 5/8 x 7/8 | 1/4 | RFGD05E-15.0-510 | 10205058302 |
| | | 7 - | 5/9 | 5/8 x 1-1/8 | 1/4 | RFGD05E-15.0-511 | 10205058402 |
| | | 8 - | 5/9 | 5/8 x 1-1/8 | 1/4 | RFGD05E-19.0-512 | 10205058602 |
| | | 8 - | 7/9 | 7/8 x 1-1/8 | 1/4 | RFGD05E-19.0-517 | 10205058802 |
| | | 9 - | 7/9 | 7/8 x 1-1/8 | 1/4 | RFGD05E-23.0-555 | 10205059002 |
| | | 9 - | 7/11 | 7/8 x 1-3/8 | 1/4 | RFGD05E-23.0-557 | 10205059202 |

# THERMOSTATIC EXPANSION VALVE

## RFGD STANDARD RANGE

*F) Models with Imperial Connections*

*RFGD20 (orifice 7-9) -25°C to +10°C with MOP +15°C*

| Ref. | Valve Body | Capacity Size All Sizes | Connections IN x OUT | | Pressure Equal. | Model Name | Product Number U11 Code Multi-Pack |
|---|---|---|---|---|---|---|---|
| | | | Imperial | [inch] | [inch] | | |
| R407C | RFGD 02E | 7 - | 5/7 | 5/8 x 7/8 | 1/4 | RFGD02E-12.0-637 | 10205062602 |
| | | 7 - | 5/9 | 5/8 x 1-1/8 | 1/4 | RFGD02E-12.0-638 | 10205062702 |
| | | 8 - | 5/9 | 5/8 x 1-1/8 | 1/4 | RFGD02E-15.0-640 | 10205062902 |
| | | 8 - | 7/9 | 7/8 x 1-1/8 | 1/4 | RFGD02E-15.0-642 | 10205063102 |
| | | 9 - | 7/9 | 7/8 x 1-1/8 | 1/4 | RFGD02E-18.0-644 | 10205063302 |
| | | 9 - | 7/11 | 7/8 x 1-3/8 | 1/4 | RFGD02E-18.0-646 | 10205063502 |
| R404A / R507 | RFGD 03E | 7 - | 5/7 | 5/8 x 7/8 | 1/4 | RFGD03E-9.0-627 | 10205061602 |
| | | 7 - | 5/9 | 5/8 x 1-1/8 | 1/4 | RFGD03E-9.0-628 | 10205061702 |
| | | 8 - | 5/9 | 5/8 x 1-1/8 | 1/4 | RFGD03E-11.0-630 | 10205061902 |
| | | 8 - | 7/9 | 7/8 x 1-1/8 | 1/4 | RFGD03E-11.0-632 | 10205062102 |
| | | 9 - | 7/9 | 7/8 x 1-1/8 | 1/4 | RFGD03E-13.0-634 | 10205062302 |
| | | 9 - | 7/11 | 7/8 x 1-3/8 | 1/4 | RFGD03E-13.0-636 | 10205062502 |
| R134a | RFGD 04E | 7 - | 5/7 | 5/8 x 7/8 | 1/4 | RFGD04E-8.0-601 | 10205051202 |
| | | 7 - | 5/9 | 5/8 x 1-1/8 | 1/4 | RFGD04E-8.0-602 | 10205059302 |
| | | 8 - | 5/9 | 5/8 x 1-1/8 | 1/4 | RFGD04E-10.0-604 | 10205059502 |
| | | 8 - | 7/9 | 7/8 x 1-1/8 | 1/4 | RFGD04E-10.0-606 | 10205059702 |
| | | 9 - | 7/9 | 7/8 x 1-1/8 | 1/4 | RFGD04E-12.0-608 | 10205059902 |
| | | 9 - | 7/11 | 7/8 x 1-3/8 | 1/4 | RFGD04E-12.0-610 | 10205060102 |
| R410A | RFGD 05E | 7 - | 5/7 | 5/8 x 7/8 | 1/4 | RFGD05E-15.0-647 | 10205063602 |
| | | 7 - | 5/9 | 5/8 x 1-1/8 | 1/4 | RFGD05E-15.0-648 | 10205063702 |
| | | 8 - | 5/9 | 5/8 x 1-1/8 | 1/4 | RFGD05E-19.0-650 | 10205063902 |
| | | 8 - | 7/9 | 7/8 x 1-1/8 | 1/4 | RFGD05E-19.0-652 | 10205064102 |
| | | 9 - | 7/9 | 7/8 x 1-1/8 | 1/4 | RFGD05E-23.0-654 | 10205064302 |
| | | 9 - | 7/11 | 7/8 x 1-3/8 | 1/4 | RFGD05E-23.0-656 | 10205064502 |

# THERMOSTATIC EXPANSION VALVE

## RFGD STANDARD RANGE

*G) Models with Flare Connections*
*RFGD20 -40°C to +10°C without MOP*

| Ref. | Valve Body | Capacity Size All Sizes | Connections | | | Model Name | Product Number U11 Code Multi-Pack |
|---|---|---|---|---|---|---|---|
| | | | Flare | IN x OUT x E | Flare Type | | |
| R134a | RFGD 04E - | 7 - | I5/6 | 5/8×3/4×1/4 | MIO x MIO x MIO | RFGD04E-8.0-525 | 10205055102 |
| | | 8 - | I5/6 | 5/8×3/4×1/4 | MIO x MIO x MIO | RFGD04E-10.0-526 | 10205055202 |
| | | 8 - | S5/6 | 5/8×3/4×1/4 | SAE x SAE x SAE | RFGD04E-10.0-527 | 10205055302 |
| | | 9 - | I5/6 | 5/8×3/4×1/4 | MIO x MIO x MIO | RFGD04E-12.0-528 | 10205055402 |

Connections
1) MIO: Inlet = 7/8-14UNF-2A ; Outlet = 17/16-14UNS-2A ; Ext. Equalization port = 7/16-20UNF-2A
2) SAE: Inlet = 7/8-14UNF-2A ; Outlet = 17/16-14UNS-2A ; Ext. Equalization port = 7/16-20UNF-2A

*H) Models with Flare Connections*
*RFGD20 -25°C to +10°C with MOP +15°C*

| Ref. | Valve Body | Capacity Size All Sizes | Connections | | | Model Name | Product Number U11 Code Multi-Pack |
|---|---|---|---|---|---|---|---|
| | | | Flare | IN x OUT x E | Flare Type | | |
| R134a | RFGD 04E - | 7 - | I5/6 | 5/8×3/4×1/4 | MIO x MIO x MIO | RFGD04E-8.0-611 | 10205051902 |
| | | 7 - | S5/6 | 5/8×3/4×1/4 | SAE x SAE x SAE | RFGD04E-8.0-612 | 10205060202 |
| | | 8 - | I5/6 | 5/8×3/4×1/4 | MIO x MIO x MIO | RFGD04E-10.0-613 | 10205052002 |
| | | 8 - | S5/6 | 5/8×3/4×1/4 | SAE x SAE x SAE | RFGD04E-10.0-614 | 10205060302 |
| | | 9 - | S5/6 | 5/8×3/4×1/4 | SAE x SAE x SAE | RFGD04E-12.0-615 | 10205060402 |
| | | 9 - | O5/6 | 5/8×3/4×1/4 | ORFS x ORFS x SAE | RFGD04E-12.0-616 | 10205060502 |

Connections
1) MIO: Inlet = 7/8-14UNF-2A ; Outlet = 17/16-14UNS-2A ; Ext. Equalization port = 7/16-20UNF-2A
2) SAE: Inlet = 7/8-14UNF-2A ; Outlet = 17/16-14UNS-2A ; Ext. Equalization port = 7/16-20UNF-2A
3) ORFS: Inlet = 1-14UNS-2A; Outlet = 1-3/16-12UN-2A; Ext. Equalization port = 7/16-20UNF-2A

# THERMOSTATIC EXPANSION VALVE

## DIMENSIONS

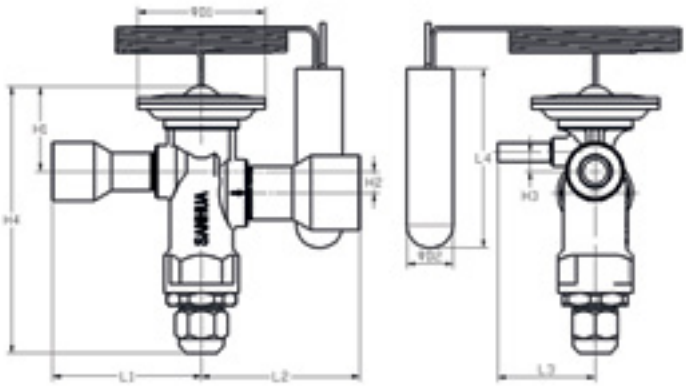

| Model | Connections | | Capillary | Dimensions [mm] | | | | | | | | | |
|---|---|---|---|---|---|---|---|---|---|---|---|---|---|
| | Imperial | Metric | | H1 | H2 | H3 | H4 | L1 | L2 | L3 | L4 | ΦD1 | ΦD2 |
| | [inch] | [mm] | [mm] | [mm] | [mm] | [mm] | [mm] | [mm] | [mm] | [mm] | [mm] | [mm] | [mm] |
| RFGD10 | 3/8×5/8 | 10×16 | 1.5 | 30 | 7.5 | 5 | 97 | 41.5 | 45.5 | 37.5 | 64 | 48 | 14.4 |
| | 1/2×7/8 | 12×22 | | | | | | 41.5 | 59.5 | | | | |
| | 5/8×7/8 | 16×22 | | | | | | 45.5 | 59.5 | | | | |
| RFGD20 | 5/8×7/8 | 16×22 | 1.5 | 32 | 9 | 8 | 111 | 48 | 62 | 40.5 | 75 | 53 | 19,2 |
| | 5/8×1-1/8 | 16×28 | | | | | | 48 | 66 | | | | |
| | 7/8×1-1/8 | 22×28 | | | | | | 62 | 66 | | | | |
| | 7/8×1-3/8 | 22×35 | | | | | | 62 | 66 | | | | |

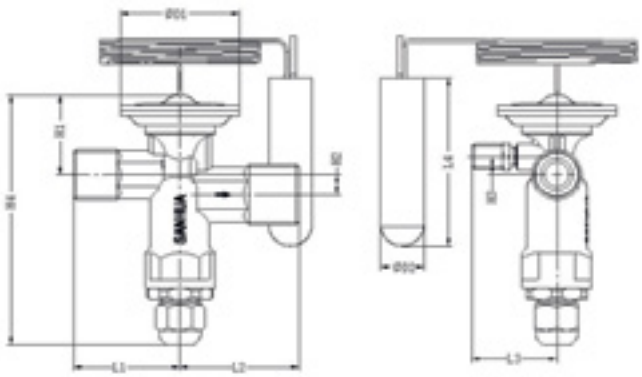

| Model | Connections | Capillary | Dimensions [mm] | | | | | | | | | |
|---|---|---|---|---|---|---|---|---|---|---|---|---|
| | Flare | | H1 | H2 | H3 | H4 | L1 | L2 | L3 | L4 | ΦD1 | ΦD2 |
| | Inlet x Out x Ext. E | [mm] | [mm] | [mm] | [mm] | [mm] | [mm] | [mm] | [mm] | [mm] | [mm] | [mm] |
| RFGD20 | 5/8×3/4×1/4MIO | 1.5 | 32 | 9 | 8 | 111 | 47.5 | 53 | 37.7 | 75 | 53 | 19,2 |
| | 5/8×3/4×1/4SAE | | | | | | | | | | | |
| | 5/8×3/4 ORFS×1/4 | | | | | | | | | | | |

***SBV*** *SERIES*

# BALL VALVE

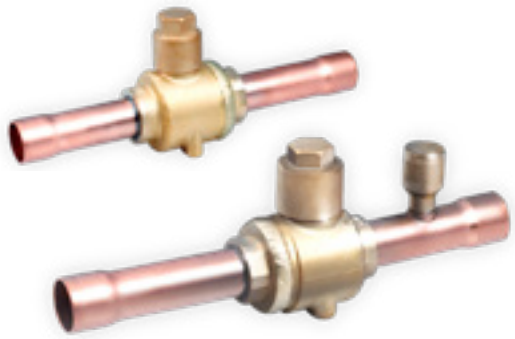

The ball valve of series SBV is applicable for commercial air conditioner, freezing or deep-freezing equipment or other refrigeration circuits in order to open and to shut off inner flow path by operating the valve stem. It can also be used as service valve for vacuum pumping and refrigerant injection etc.

## FEATURES

- STRAIGHTWAY TYPE, FULL PORT, LOW PRESSURE DROP , COST-EFFECTIVE
- VALVE BODY AND VALVE SEAT WITH WELDED STRUCTURE, WITH HIGH PRODUCT RELIABILITY
- ROTATE 1/4 CIRCLES FROM FULL-OPEN TO FULL-CLOSE, EASY TO OPERATE
- BI-DIRECTIONAL FLOW
- ROTATION STOP ON REQUEST FOR FULL-OPEN AND FULL-CLOSE OF THE VALVE FOR SIZES ≥ SBV-11
- SPECIAL SEALING MATERIALS TO PREVENT INTERNAL LEAKAGE

### GENERAL SPECIFICATIONS

- Applicable for all common HCFC, HFC and HFO refrigerants such as: R134a, R404A, R407A/C/F, R410A, R507A, R448A, R449A, , R452A, R1234ze(E), R290,...
- Medium temperature TS min./max.: -40°C / +120°C
- Max. operating pressure PS: 4,9 MPa (49 bar)
- Installation position: liquid, suction and discharge line in all directions
- Certifications: UL/CSA and PED declaration

# BALL VALVE

## GENERAL CHARACTERISTICS

*1. Standard SBV models with FULL PORT passage*

| Without Access Fitting | | Connections Ø d ODF | | Kv | Wrench Size Cap | PED category | | With Access Fitting | |
|---|---|---|---|---|---|---|---|---|---|
| Model | Part Number* | [inch] | [mm] | [m³/h] | [mm] | Fluids Group 1 | Fluids Group 2 | Model | Part Number* |
| SBV02-020T | 10150130002 | - | 6 | 1,9 | 19 | 4.3 | 4.3 | SBV02-320T | 10150130102 |
| SBV02-019T | 10150129402 | 1/4 | - | 1,9 | 19 | 4.3 | 4.3 | SBV02-319T | 10150129902 |
| SBV03-019T | 10150129302 | 3/8 | - | 5,5 | 19 | 4.3 | 4.3 | SBV03-319T | 10150130602 |
| SBV03-020T | 10150130202 | - | 10 | 5,5 | 19 | 4.3 | 4.3 | SBV03-320T | 10150130302 |
| SBV04-020T | 10150129802 | - | 12 | 7,3 | 19 | 4.3 | 4.3 | SBV04-320T | 10150130502 |
| SBV04-019T | 10150129702 | 1/2 | - | 7,3 | 19 | 4.3 | 4.3 | SBV04-319T | 10150130402 |
| SBV(M)-A5YHSY-2-SA | 10150057602 | - | 15 | 13,8 | 14 | 4.3 | 4.3 | SBV(M)-JA5YHSY-2-SA | 10150057702 |
| SBV(M)-A5YHSY-1-SA | 10150053302 | 5/8 | 16 | 13,8 | 14 | 4.3 | 4.3 | SBV(M)-JA5YHSY-1-SA | 10150053402 |
| SBV(M)-A6YHSY-2-SA | 10150054602 | - | 18 | 20,6 | 17 | 4.3 | 4.3 | SBV(M)-JA6YHSY-2-SA | 10150054502 |
| SBV(M)-A6YHSY-1-SA | 10150054302 | 3/4 | - | 20,6 | 17 | 4.3 | 4.3 | SBV(M)-JA6YHSY-1-SA | 10150054202 |
| SBV(M)-A7YHSY-1-SA | 10150053502 | 7/8 | 22 | 29 | 17 | 4.3 | 4.3 | SBV(M)-JA7YHSY-1-SA | 10150053602 |
| SBV(M)-A9YHSY-2-SA | 10150055102 | - | 28 | 54,3 | 17 | II | 4.3 | SBV(M)-JA9YHSY-2-SA | 10150055202 |
| SBV(M)-A9YHSY-1-SA | 10150054702 | 1 1/8 | - | 54,3 | 17 | II | 4.3 | SBV(M)-JA9YHSY-1-SA | 10150054802 |
| SBV(M)-A11YHSY-1-SA | 10150055002 | 1 3/8 | 35 | 85,5 | 17 | II | 4.3 | SBV(M)-JA11YHSY-1-SA | 10150054902 |
| SBV(M)-A13YHSY-2-SA | 10150055502 | 1 5/8 | - | 133,7 | 17 | II | I | SBV(M)-JA13YHSY-2-SA | 10150055402 |
| SBV(M)-A13YHSY-1-SA | 10150055302 | - | 42 | 133,7 | 17 | II | I | SBV(M)-JA13YHSY-1-SA | 10150057802 |
| SBV(M)-A17YHSY-1-SA | 10150055702 | 2 1/8 | 54 | 225 | 19 | II | I | SBV(M)-JA17YHSY-1-SA | 10150055802 |
| SBV(M)-A19YHSY-1-SA | 10150055902 | - | 64 | 225 | 19 | II | I | SBV(M)-JA19YHSY-1-SA | 10150056002 |
| SBV(M)-A21YHSY-2-SA | 10150056302 | 2 5/8 | - | 380 | 19 | II | I | SBV(M)-JA21YHSY-2-SA | 10150056402 |
| SBV(M)-A25YHSY-2-SA | 10150056502 | 3 1/8 | 80 | 530 | 24 | II | I | SBV(M)-JA25YHSY-2-SA | 10150056602 |
| SBV(M)-A29YHSY-1-SA | 10150057002 | 3 5/8 | 92 | 700 | 24 | II | I | SBV(M)-JA29YHSY-1-SA | 10150056902 |
| SBV(M)-A33YHSY-2-SA | 10150056102 | 4 1/8 | 105 | 950 | 29 | II | I | SBV(M)-JA33YHSY-2-SA | 10150056202 |
| SBV(M)-A34YHSY-1-SA | 10150057102 | 4 1/4 | 108 | 950 | 29 | II | I | SBV(M)-JA34YHSY-1-SA | 10150057202 |

**Note:**
- SBV model with different connection sizes available on request
- * Available also as industrial package. Contact Sanhua for more details

# BALL VALVE

## DIMENSIONS & WEIGHT

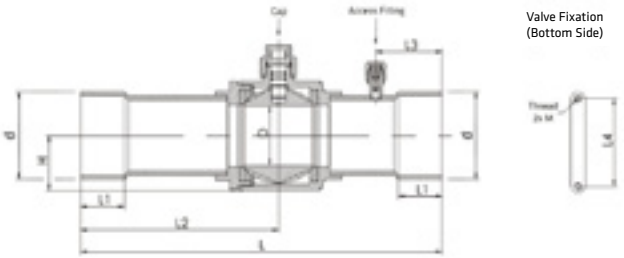


| Part Number | | L | L1 | L2 | L3[1)] | L4 | D | H | M | Weight |
|---|---|---|---|---|---|---|---|---|---|---|
| Without Access Fitting | With Access Fitting | [mm] | [mm] | [mm] | [mm] | [mm] | [mm] | [mm] | [mm] | [kg] |
| SBV02-020T | SBV02-320T | 132 | 10 | 68 | 31 | 16 | 10 | 14 | M4 x 0,7 | 0,20 |
| SBV02-019T | SBV02-319T | 132 | 10 | 68 | 31 | 16 | 10 | 14 | M4 x 0,7 | 0,20 |
| SBV03-019T | SBV03-319T | 132 | 10 | 68 | 31 | 16 | 10 | 14 | M4 x 0,7 | 0,20 |
| SBV03-020T | SBV03-320T | 132 | 10 | 68 | 31 | 16 | 10 | 14 | M4 x 0,7 | 0,20 |
| SBV04-020T | SBV04-320T | 160 | 10 | 85 | 42,5 | 16 | 10 | 14 | M4 x 0,7 | 0,21 |
| SBV04-019T | SBV04-319T | 160 | 10 | 85 | 42,5 | 16 | 10 | 14 | M4 x 0,7 | 0,21 |
| SBV(M)-A5YHSY-2-SA | SBV(M)-JA5YHSY-2-SA | 160 | 13 | 85 | 31 | 22 | 14 | 16 | M4 x 0,7 | 0,30 |
| SBV(M)-A5YHSY-1-SA | SBV(M)-JA5YHSY-1-SA | 160 | 13 | 85 | 31 | 22 | 14 | 16 | M4 x 0,7 | 0,30 |
| SBV(M)-A6YHSY-2-SA | SBV(M)-JA6YHSY-2-SA | 185 | 16 | 99 | 37 | 30 | 19 | 20 | M4 x 0,7 | 0,51 |
| SBV(M)-A6YHSY-1-SA | SBV(M)-JA6YHSY-1-SA | 185 | 16 | 99 | 37 | 30 | 19 | 20 | M4 x 0,7 | 0,51 |
| SBV(M)-A7YHSY-1-SA | SBV(M)-JA7YHSY-1-SA | 185 | 17 | 99 | 37 | 30 | 19 | 20 | M4 x 0,7 | 0,52 |
| SBV(M)-A9YHSY-2-SA | SBV(M)-JA9YHSY-2-SA | 208 | 21 | 112 | 44 | 38 | 25 | 25 | M4 x 0,7 | 0,73 |
| SBV(M)-A9YHSY-1-SA | SBV(M)-JA9YHSY-1-SA | 208 | 21 | 112 | 44 | 38 | 25 | 25 | M4 x 0,7 | 0,73 |
| SBV(M)-A11YHSY-1-SA | SBV(M)-JA11YHSY-1-SA | 251 | 25 | 136 | 44 | 48 | 32 | 31 | M6 x 1,0 | 1,42 |
| SBV(M)-A13YHSY-2-SA | SBV(M)-JA13YHSY-2-SA | 281 | 28 | 151 | 56 | 55 | 38 | 35 | M6 x 1,0 | 1,90 |
| SBV(M)-A13YHSY-1-SA | SBV(M)-JA13YHSY-1-SA | 281 | 28 | 151 | 56 | 55 | 38 | 35 | M6 x 1,0 | 1,90 |
| SBV(M)-A17YHSY-1-SA | SBV(M)-JA17YHSY-1-SA | 305 | 34 | 167 | 56 | 74 | 50 | 46 | M6 x 1,0 | 3,74 |
| SBV(M)-A19YHSY-1-SA | SBV(M)-JA19YHSY-1-SA | 305 | 34 | 167 | 70 | 74 | 50 | 46 | M6 x 1,0 | 3,79 |
| SBV(M)-A21YHSY-2-SA | SBV(M)-JA21YHSY-2-SA | 305 | 37 | 167 | 56 | 74 | 60 | 56 | M6 x 1,0 | 6,08 |
| SBV(M)-A25YHSY-2-SA | SBV(M)-JA25YHSY-2-SA | 378 | 42 | 186 | 80 | 90 | 70 | 63 | M6 x 1,0 | 8,81 |
| SBV(M)-A29YHSY-1-SA | SBV(M)-JA29YHSY-1-SA | 423 | 42 | 208 | 75 | 108 | 80 | 75 | M6 x 1,0 | 11,47 |
| SBV(M)-A33YHSY-2-SA | SBV(M)-JA33YHSY-2-SA | 423 | 42 | 210,0 | 75 | 148 | 95 | 91 | M6 x 1,0 | 20,17 |
| SBV(M)-A34YHSY-1-SA | SBV(M)-JA34YHSY-1-SA | 423 | 42 | 210,0 | 75 | 148 | 95 | 91 | M6 x 1,0 | 20,17 |

**Note:** 1) Applicable to versions with access fitting

# BALL VALVE

## GENERAL CHARACTERISTICS

*2. Standard SBV models with REDUCED PORT passage*

| Without Access Fitting | | Connections Ø d ODF | | Kv | Wrench Size Cap | PED category | | With Access Fitting | |
|---|---|---|---|---|---|---|---|---|---|
| Model | Part Number* | [inch] | [mm] | [m³/h] | [mm] | Fluids Group 1** | Fluids Group 2 | Model | Part Number* |
| SBV06-602 | 10150116502 | - | 18 | 13,8 | 14 | 4.3 | 4.3 | SBV06-802 | 10150116402 |
| SBV06-601 | 10150115002 | 3/4 | - | 13,8 | 14 | 4.3 | 4.3 | SBV06-801 | 10150115102 |
| SBV07-601 | 10150115302 | 7/8 | 22 | 13,8 | 14 | 4.3 | 4.3 | SBV07-801 | 10150087602 |
| SBV09-602 | 10150116302 | - | 28 | 29 | 17 | 4.3 | 4.3 | SBV09-802 | 10150116202 |
| SBV09-601 | 10150084902 | 1 1/8 | - | 29 | 17 | 4.3 | 4.3 | SBV09-801 | 10150115402 |
| SBV11-601 | 10150102702 | 1 3/8 | 35 | 54,3 | 17 | II | 4.3 | SBV11-801 | 10150093102 |
| SBV13-601 | 10150102502 | 1 5/8 | - | 85,5 | 17 | II | 4.3 | SBV13-801 | 10150093202 |
| SBV13-602 | 10150116102 | - | 42 | 85,5 | 17 | II | 4.3 | SBV13-802 | 10150116002 |
| SBV17-601 | 10150115502 | 2 1/8 | 54 | 133,7 | 17 | II | I | SBV17-801 | 10150087502 |
| SBV21-601 | 10150102602 | 2 5/8 | - | 225 | 19 | II | I | - | - |
| SBV25-601 | 10150115602 | 3 1/8 | 80 | 380 | 19 | II | I | - | - |
| SBV29-601 | 10150115702 | 3 5/8 | 92 | 530 | 24 | II | I | - | - |
| SBV33-601 | 10150115802 | 4 1/8 | 105 | 700 | 24 | II | I | - | - |
| SBV34-601 | 10150115902 | 4 1/4 | 108 | 700 | 24 | II | I | - | - |

**Note:**
- SBV model with different connection sizes available on request
- * Available also as industrial package. Contact Sanhua for more details

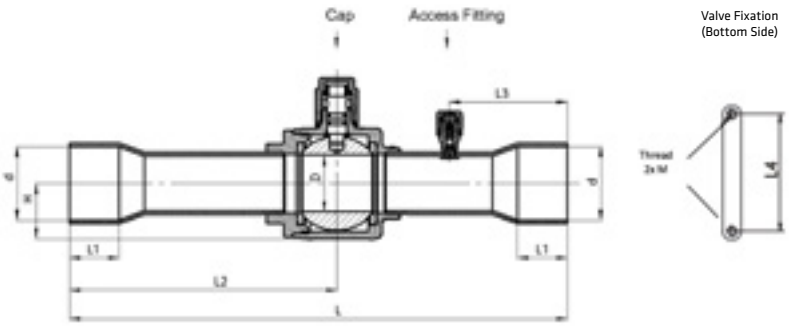

# BALL VALVE

## DIMENSIONS & WEIGHT

| Part Number | | L | L1 | L2 | L3[1)] | L4 | D | H | M | Weight |
|---|---|---|---|---|---|---|---|---|---|---|
| Without Access Fitting | With Access Fitting | [mm] | [mm] | [mm] | [mm] | [mm] | [mm] | [mm] | [mm] | [kg] |
| SBV06-602 | SBV06-802 | 185 | 16 | 99 | 46 | 22 | 14 | 16 | M4 x 0,7 | 0,33 |
| SBV06-601 | SBV06-801 | 185 | 16 | 99 | 46 | 22 | 14 | 16 | M4 x 0,7 | 0,33 |
| SBV07-601 | SBV07-801 | 185 | 17 | 99 | 46 | 22 | 14 | 16 | M4 x 0,7 | 0,34 |
| SBV09-602 | SBV09-802 | 208 | 21 | 112 | 53 | 30 | 19 | 20 | M4 x 0,7 | 0,56 |
| SBV09-601 | SBV09-801 | 208 | 21 | 112 | 53 | 30 | 19 | 20 | M4 x 0,7 | 0,56 |
| SBV11-601 | SBV11-801 | 251 | 25 | 136 | 63 | 38 | 25 | 25 | M4 x 0,7 | 0,81 |
| SBV13-301 | SBV13-801 | 281 | 28 | 151 | 66.5 | 48 | 32 | 31 | M6 x 1,0 | 1,51 |
| SBV13-602 | SBV13-802 | 281 | 28 | 151 | 66.5 | 48 | 32 | 31 | M6 x 1,0 | 1,51 |
| SBV17-601 | SBV17-801 | 305 | 34 | 167 | 63 | 55 | 38 | 35 | M6 x 1,0 | 2,31 |
| SBV21-601 | - | 305 | 37 | 135 | - | 74 | 50 | 46 | M6 x 1,0 | 3,80 |
| SBV25-601 | - | 378 | 42 | 186 | - | 74 | 60 | 56 | M6 x 1,0 | 6,58 |
| SBV29-601 | - | 423 | 42 | 208 | - | 90 | 70 | 63 | M6 x 1,0 | 9,35 |
| SBV33-601 | - | 423 | 42 | 210 | - | 108 | 80 | 75 | M6 x 1,0 | 11,71 |
| SBV34-601 | - | 423 | 42 | 210 | - | 108 | 80 | 75 | M6 x 1,0 | 11,76 |

**Note:** 1) Applicable to versions with access fitting

# SANHUA

**SANHUA** INTERNATIONAL
**info@sanhuaeurope.com**

## Technical information
## sanhuaeurope.com

**DOWNLOAD NOW**
*OUR ONLINE*
**CATALOGUE**

Certificate of registration
ISO 14001:2004

Certificate of registration
ISO 9001:2008

REACH
NR. 1907/2006
CONFORMITY DECLARATION

**BEST SUPPLIER AWARDS**

B/S/H/ Carrier TRANE

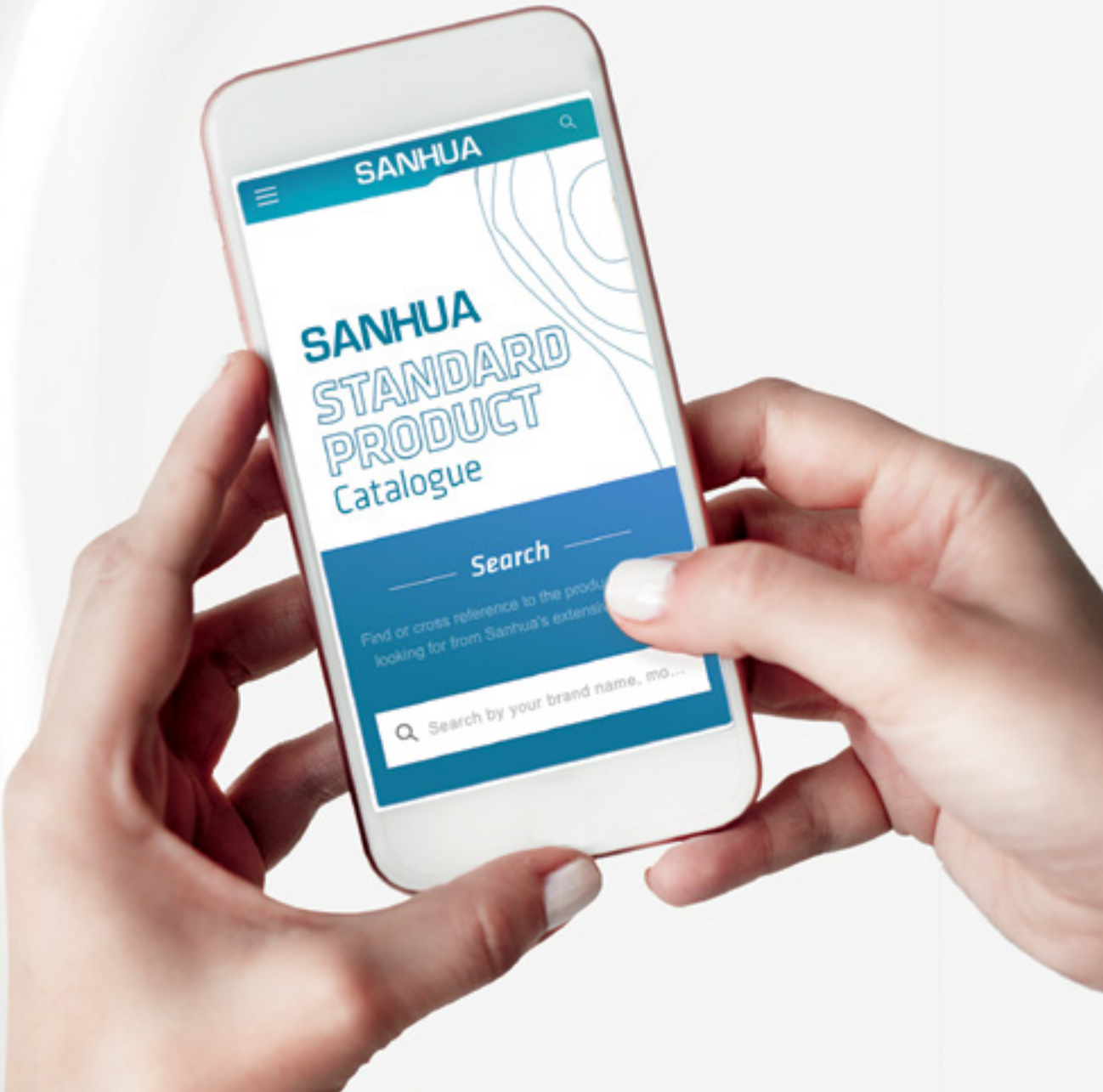

## ***GBV*** *SERIES*

# BALL VALVE

The ball valve of series GBV is applicable for commercial air conditioner, freezing / deep-freezing applications and other refrigeration systems. This ball valves are designed to open and close inner flow path by operating the valve stem. It can also be used as service valve for vacuum pumping and refrigerant injection etc. The Design Pressure (PS) of the versions GBV is 49 bars.

## FEATURES

- STRAIGHTWAY TYPE, FULL PORT, LOW PRESSURE DROP
- ALL STAINLESS STEEL BODY WITH COPPER CONNECTORS
- PRODUCED WITH ADVANCED WELDING PROCESS TO PROVIDE VERY LOW INTERNAL LEAKAGE RATES, AND SMOOTH OPENING/CLOSING ROTATION
- LIGHT WEIGHT BODY WITH VERY GOOD VIBRATION RESISTANCE, MOSTLY NO NEED OF FIXATION
- BI-DIRECTIONAL FLOW
- EASY MAINTENANCE: THE VALVE CAP IS ANTI-FALLING DESIGN AND ANTI-ROTATING VALVE STEM
- GREEN ENVIRONMENTAL PROTECTION: LEAD-FREE DESIGN, SO THAT THE PRODUCT LIFE CYCLE CARBON EMISSIONS IS ABOUT 50% OF A BRASS BALL VALVE

### GENERAL SPECIFICATIONS

- Applicable for all common HFC, HFO and HC refrigerants such as: R134a, R404A, R410A, R507A, R448A, R449A, R450A, R452A, R513A, R32, R1234yf, R1234ze(E), R1233zd(E), R454A/B/C, R455A, R290
- Medium temperature TS min./max.: -40°C / +120°C ( < +150°C for short term use)
- Max. operating pressure (PS): 4,9 MPa (49 bar)
- Installation position: liquid, suction and discharge line in all directions
- Certifications: UL, PED

# BALL VALVE

## GENERAL CHARACTERISTICS

*1. Standard GBV models with FULL PORT passage*

| Without Access Fitting | | | Connections Ø ODF | | Kv | DN | PED category | | With Access Fitting | | |
|---|---|---|---|---|---|---|---|---|---|---|---|
| Model | Part Number | Weight [g] | [inch] | [mm] | [m³/h] | | Fluids Group 1 | Fluids Group 2 | Model | Part Number | Weight [g] |
| GBV02H002 | GBVX0000602 | 76 | - | 6 | 1.9 | 12.5 | Art. 4.3 | Art. 4.3 | GBV02H004 | GBVX0000802 | 90 |
| GBV02H001 | GBVX0000502 | 76 | 1/4 | - | 1.9 | 12.5 | Art. 4.3 | Art. 4.3 | GBV02H003 | GBVX0000702 | 90 |
| GBV03H002 | GBVX0001002 | 81 | - | 10 | 5.5 | 12.5 | Art. 4.3 | Art. 4.3 | GBV03H004 | GBVX0001202 | 95 |
| GBV03H001 | GBVX0000902 | 81 | 3/8 | - | 5.5 | 12.5 | Art. 4.3 | Art. 4.3 | GBV03H003 | GBVX0001102 | 95 |
| GBV04H002 | GBVX0001402 | 93 | - | 12 | 7.3 | 12.5 | Art. 4.3 | Art. 4.3 | GBV04H004 | GBVX0001602 | 109 |
| GBV04H001 | GBVX0001302 | 93 | 1/2 | - | 7.3 | 12.5 | Art. 4.3 | Art. 4.3 | GBV04H003 | GBVX0001502 | 109 |
| GBV05H002 | 10150131302 | 110 | - | 15 | 13.8 | 14,6 | Art. 4.3 | Art. 4.3 | GBV05H004 | 10150131802 | 125 |
| GBV05H001 | 10150125202 | 110 | 5/8 | 16 | 13,8 | 14,6 | Art. 4.3 | Art. 4.3 | GBV05H003 | 10150127202 | 125 |
| GBV06H002 | 10150131402 | 244 | - | 18 | 20.6 | 20,6 | Art. 4.3 | Art. 4.3 | GBV06H004 | GBVX0000102 | 260 |
| GBV06H001 | 10150120502 | 244 | 3/4 | - | 20,6 | 20,6 | Art. 4.3 | Art. 4.3 | GBV06H003 | 10150122902 | 260 |
| GBV07H001 | 10150120402 | 255 | 7/8 | 22 | 29 | 20,6 | Art. 4.3 | Art. 4.3 | GBV07H003 | 10150121502 | 270 |
| GBV09H002 | 10150131602 | 366 | - | 28 | 54.3 | 26,6 | Art. 4.3 | Art. 4.3 | GBV09H004 | GBVX0000202 | 380 |
| GBV09H001 | 10150126402 | 366 | 1- 1/8 | - | 54,3 | 26,6 | Cat II | Art. 4.3 | GBV09H003 | 10150127302 | 380 |
| GBV11H001 | 10150128402 | 667 | 1-3/8 | 35 | 85,5 | 33,4 | Cat II | Cat I | GBV11H003 | 10150128702 | 682 |
| GBV13H001 | 10150128502 | 1151 | 1-5/8 | - | 133,7 | 39,0 | Cat II | Cat I | GBV13H003 | 10150128802 | 1163 |
| GBV13H002 | 10150131702 | 1151 | - | 42 | 133.7 | 39,0 | Cat II | Cat I | GBV13H004 | GBVX0000302 | 1163 |

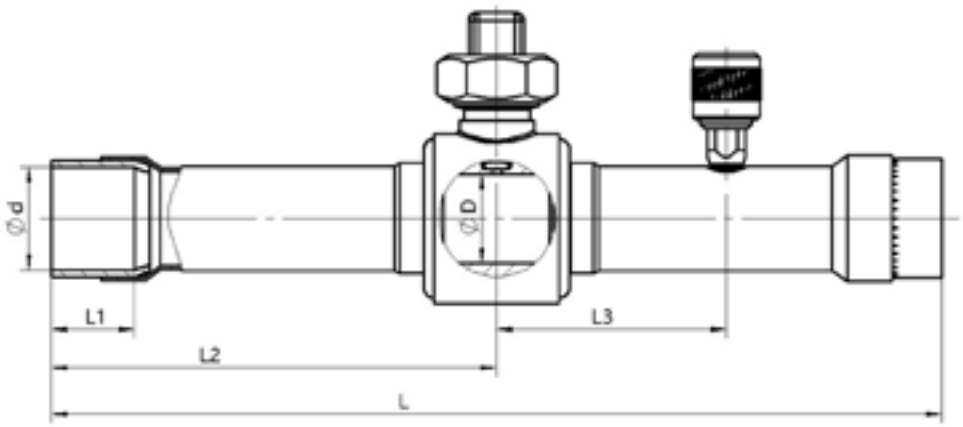

# BALL VALVE

## DIMENSIONS

| Product Number | | Connections Ø ODF | | L | L1 | L2 | L3 | Ø D |
|---|---|---|---|---|---|---|---|---|
| Without Access Fitting | With Access Fitting | [inch] | [mm] | [mm] | [mm] | [mm] | [mm] | [mm] |
| GBV02H002 | GBV02H004 | - | 6 | 132 | 8 | 66 | 37.8 | 12.5 |
| GBV02H001 | GBV02H003 | 1/4 | - | 132 | 8 | 66 | 37.8 | 12.5 |
| GBV03H002 | GBV03H004 | - | 10 | 132 | 10 | 66 | 37.8 | 12.5 |
| GBV03H001 | GBV03H003 | 3/8 | - | 132 | 10 | 66 | 37.8 | 12.5 |
| GBV04H002 | GBV04H004 | - | 12 | 160 | 13 | 80 | 37.8 | 12.5 |
| GBV04H001 | GBV04H003 | 1/2 | - | 160 | 13 | 80 | 37.8 | 12.5 |
| GBV05H002 | GBV05H004 | - | 15 | 158 | 13 | 79 | 37 | 14 |
| GBV05H001 | GBV05H003 | 5/8 | 16 | 158 | 13 | 79 | 37 | 14 |
| GBV06H002 | GBV06H004 | - | 18 | 188 | 17 | 94 | 48.5 | 19 |
| GBV06H001 | GBV06H003 | 3/4 | - | 188 | 17 | 94 | 48.5 | 19 |
| GBV07H001 | GBV07H003 | 7/8 | 22 | 188 | 17.5 | 94 | 48.5 | 19 |
| GBV09H002 | GBV09H004 | - | 28 | 206 | 20 | 103 | 43.5 | 25 |
| GBV09H001 | GBV09H003 | 1-1/8 | - | 206 | 20 | 103 | 43.5 | 25 |
| GBV11H001 | GBV11H003 | 1-3/8 | 35 | 250 | 25 | 125 | 56 | 32 |
| GBV13H001 | GBV13H003 | 1-5/8 | - | 275 | 25 | 137 | 60 | 38 |
| GBV13H002 | GBV13H004 | - | 42 | 275 | 25 | 137 | 60 | 38 |

**Note:** 1. The models without access fitting have no dimension of 'L3'.
2. Other size of connections are available on request.

## ***CBV*** *SERIES*

# BALL VALVE

CBV valves are typically used in commercial $CO_2$ refrigeration applications in order to open and to shut off inner flow path by operating the valve stem. The ball valve of series CBV is applicable for subcritical $CO_2$ refrigeration systems and is a perfect choice for all similar $CO_2$ systems.

## FEATURES

- STRAIGHTWAY TYPE, FULL PORT, LOW PRESSURE DROP, COST-EFFECTIVE
- VALVE BODY AND VALVE SEAT WITH WELDED STRUCTURE, WITH HIGH PRODUCT RELIABILITY
- ROTATE ¼ CIRCLES FROM FULL-OPEN TO FULL-CLOSE, EASY TO OPERATE
- BIDIRECTIONAL FLOW [1)]
- ROTATION STOP FOR FULL-OPEN AND FULL-CLOSE OF THE VALVE AVAILABLE
- SPECIAL SEALING MATERIALS TO PREVENT INTERNAL LEAKAGE

**Note:** 1) CBV valves fulfill internal tightness requirements of the standard EN12284, paragraph 9.6.3 in both flow directions.
Installations with shut off function to the atmosphere (just temporarily for service purpose): Please install the solder connection "B" at the airside. Please see solder connection "A" and "B" at the dimensional drawing page 3.
Remark: Welding body junction is always at solder connection "A"

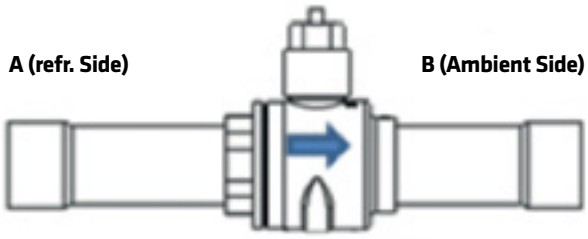


### GENERAL SPECIFICATION

- Applicable for R744 ($CO_2$)
- Medium temperature TS min./max.: -40°C/+150°C
- Max. operating pressure PS: 6,0 MPa (60bar)
- Installation position: liquid, suction and discharge line in all directions
- Certification: PED declaration.

# BALL VALVE

## GENERAL CHARACTERISTICS

| Model | Part Number*[1)] | Connection Ø d ODF | | Kv | Wrench Size Cap | PED Category |
|---|---|---|---|---|---|---|
| | | [inch] | [mm] | [m³/h] | [mm] | |
| CBV02-002 | 10150074202 | - | 6 | 1,9 | H14 | 4.3 |
| CBV02-001 | 10150074102 | 1/4 | - | 1,9 | H14 | 4.3 |
| CBV03-001 | 10150074302 | 3/8 | - | 5,5 | H14 | 4.3 |
| CBV03-002 | 10150074402 | - | 10 | 5,5 | H14 | 4.3 |
| CBV04-002 | 10150074602 | - | 12 | 7,3 | H14 | 4.3 |
| CBV04-001 | 10150074502 | 1/2 | - | 7,3 | H14 | 4.3 |
| CBV05-001 | 10150074702 | 5/8 | 16 | 13,8 | H14 | 4.3 |
| CBV06-002 | 10150074902 | - | 18 | 20,6 | H17 | 4.3 |
| CBV06-001 | 10150074802 | 3/4 | - | 20,6 | H17 | 4.3 |
| CBV07-001 | 10150063002 | 7/8 | 22 | 29,0 | H17 | 4.3 |
| CBV09-002 | 10150075002 | - | 28 | 54,3 | H17 | 4.3 |
| CBV09-001 | 10150062902 | 1 1/8 | - | 54,3 | H17 | 4.3 |
| CBV11-001 | 10150075102 | 1 3/8 | 35 | 85,5 | H17 | I |
| CBV13-002 | 10150062802 | 1 5/8 | - | 133,7 | H17 | I |
| CBV13-003 | 10150075202 | - | 42 | 133,7 | H17 | I |
| CBV17-001 | 10150075302 | 2 1/8 | 54 | 225,0 | H19 | I |

**Note:** * Available also as industrial package. Contact Sanhua for more details.
1) Extent of delivery: valve body and standard cap

# BALL VALVE

## DIMENSIONS & WEIGHT

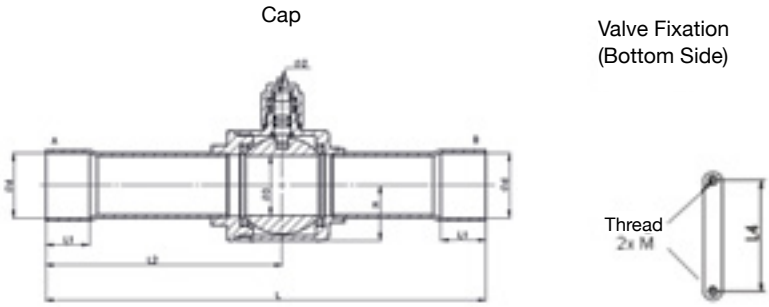


| Model | Part Number* | L | L1 | L2 | L4 | D | H | M | Weight |
|---|---|---|---|---|---|---|---|---|---|
| CBV02-002 | 10150074202 | 132 | 8 | 68 | 22 | 14 | 16 | M4 x 0,7 | 0,28 |
| CBV02-001 | 10150074102 | 132 | 8 | 68 | 22 | 14 | 16 | M4 x 0,7 | 0,28 |
| CBV03-001 | 10150074302 | 132 | 8 | 68 | 22 | 14 | 16 | M4 x 0,7 | 0,29 |
| CBV03-002 | 10150074402 | 132 | 8 | 68 | 22 | 14 | 16 | M4 x 0,7 | 0,29 |
| CBV04-002 | 10150074602 | 160 | 10 | 85 | 22 | 14 | 16 | M4 x 0,7 | 0,30 |
| CBV04-001 | 10150074502 | 160 | 10 | 85 | 22 | 14 | 16 | M4 x 0,7 | 0,30 |
| CBV05-001 | 10150074702 | 160 | 12 | 85 | 22 | 14 | 16 | M4 x 0,7 | 0,30 |
| CBV06-002 | 10150074902 | 185 | 14 | 99 | 30 | 19 | 20 | M4 x 0,7 | 0,51 |
| CBV06-001 | 10150074802 | 185 | 14 | 99 | 30 | 19 | 20 | M4 x 0,7 | 0,51 |
| CBV07-001 | 10150063002 | 185 | 17 | 99 | 30 | 19 | 20 | M4 x 0,7 | 0,52 |
| CBV09-002 | 10150075002 | 208 | 20 | 112 | 38 | 25 | 25 | M4 x 0,7 | 0,73 |
| CBV09-001 | 10150062902 | 208 | 20 | 112 | 38 | 25 | 25 | M4 x 0,7 | 0,73 |
| CBV11-001 | 10150075102 | 251 | 25 | 136 | 48 | 32 | 31 | M6 x 1,0 | 1,42 |
| CBV13-002 | 10150062802 | 281 | 29 | 151 | 55 | 38 | 35 | M6 x 1,0 | 1,90 |
| CBV13-003 | 10150075202 | 281 | 29 | 151 | 55 | 38 | 35 | M6 x 1,0 | 1,90 |
| CBV17-001 | 10150075302 | 305 | 34 | 167 | 74 | 50 | 46 | M6 x 1,0 | 3,74 |

* Available also as industrial package. Contact Sanhua for more details.

# GREEN TECHNOLOGY FOR LOW CARBON FOOTPRINT

SANHUA

## ***CBVT*** *SERIES*

# BALL VALVE

The ball valve of series CBVT is applicable for commercial $CO_2$ refrigeration applications in order to open and to shut off inner flow path by operating the valve stem. The ball valve of CBVT is applicable for transcritical $CO_2$ refrigeration systems and is a perfect choice for all similar $CO_2$ systems.

## FEATURES

- STRAIGHTWAY TYPE, FULL PORT, LOW PRESSURE DROP – HIGH EFFICIENCY
- VALVE BODY WITH WELDED STRUCTURE – PRODUCT STRENGTH AND RELIABILITY
- ROTATE 1/4 CIRCLES FROM FULL-OPEN TO FULL-CLOSE – EASY AND FAST TO OPERATE
- BIDIRECTIONAL FLOW[1)]
- VERSION WITH BI-METAL CONNECTIONS – EASY AND FAST BRAZING FOR SYSTEMS WITH K65 PIPING
- VERSION WITH STAINLESS-STEEL BUTT-WELDING CONNECTIONS – SUITABLE FOR SYSTEMS WITH STAINLESS STEEL PIPING

**Note:** 1) CBVT valves fulfill internal tightness requirements of the standard EN12284, paragraph 9.6.3 only in the direction indicated by the arrow [refrigerant on connection "A"; airside on connection "B"]. Installations with shut off function to the atmosphere (just temporarily for service purpose): Please install the solder connection "B" at the airside. Remark: Welding body junction is always at solder connection "A"

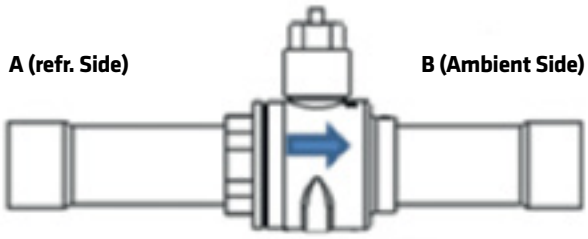


### GENERAL SPECIFICATIONS

- Applicable for R744 ($CO_2$)
- Medium temperature TS min./max.: -40°C / +150°C
- Max. operating pressure PS: 14 MPa (burst pressure: 42MPa)
- Installation position: liquid, suction and discharge line in all directions
- Certifications: PED declaration
- UL attestation

# BALL VALVE

## GENERAL CHARACTERISTICS

*1) Models with Bi-Metal Connections*

| Model | Part Number | Connection Ø d ODF | | Kv | Wrench Size Cap | PED Category |
|---|---|---|---|---|---|---|
| | | [inch] | [mm] | [m³/h] | [mm] | |
| CBVT 02H002 | 10150108802 | - | 6 | 1,9 | H19 | 4.3 |
| CBVT 02H001 | 10150103102 | 1/4 | - | 1,9 | H19 | 4.3 |
| CBVT 03H001 | 10150099502 | 3/8 | - | 5,5 | H19 | 4.3 |
| CBVT 03H002 | 10150109102 | - | 10 | 5,5 | H19 | 4.3 |
| CBVT 04H002 | 10150108902 | - | 12 | 7,3 | H19 | 4.3 |
| CBVT 04H001 | 10150099202 | 1/2 | - | 7,3 | H19 | 4.3 |
| CBVT 05H002 | 10150109002 | - | 15 | 13,8 | H14 | 4.3 |
| CBVT 05H001 | 10150099302 | 5/8 | 16 | 13,8 | H14 | 4.3 |
| CBVT 06H002 | 10150109302 | - | 18 | 20,6 | H17 | 4.3 |
| CBVT 06H001 | 10150099102 | 3/4 | - | 20,6 | H17 | 4.3 |
| CBVT 07H001 | 10150099002 | 7/8 | 22 | 29,0 | H17 | 4.3 |
| CBVT 09H002 | 10150109202 | - | 28 | 54,2 | H17 | 4.3 |
| CBVT 09H001 | 10150098902 | 1-1/8 | - | 54,2 | H17 | 4.3 |
| CBVT 11H001 | 10150098502 | 1-3/8 | 35 | 85,5 | H17 | I |
| CBVT 13H001 | 10150098602 | 1-5/8 | - | 133,7 | H17 | I |
| CBVT 13H002 | 10150109402 | - | 42 | 133,7 | H17 | I |
| CBVT 17H001 | 10150098402 | 2-1/8 | 54 | 225,0 | H19 | I |

*2) Models with Stainless-Steel Butt-Welding Connections*

| Model | Part Number | Connection Ø d ODF | | Kv | Wrench Size Cap | PED Category |
|---|---|---|---|---|---|---|
| | | [inch] | [mm] | [m³/h] | [mm] | |
| CBVT 03H302 | 10150111402 | - | 10 | 5,5 | H19 | 4.3 |
| CBVT 04H302 | 10150111602 | - | 12 | 7,3 | H19 | 4.3 |
| CBVT 05H301 | 10150111702 | 5/8 | 16 | 13,8 | H14 | 4.3 |
| CBVT 06H302 | 10150111902 | - | 18 | 20,6 | H17 | 4.3 |
| CBVT 07H301 | 10150110302 | 7/8 | 22 | 29,0 | H17 | 4.3 |
| CBVT 09H302 | 10150112102 | - | 28 | 54,2 | H17 | 4.3 |
| CBVT 11H301 | 10150112202 | 1-3/8 | 35 | 85,5 | H17 | I |
| CBVT 13H302 | 10150112402 | - | 42 | 133,7 | H17 | I |

# BALL VALVE

## DIMENSIONS

*1) Models with Bi-Metal Connections*

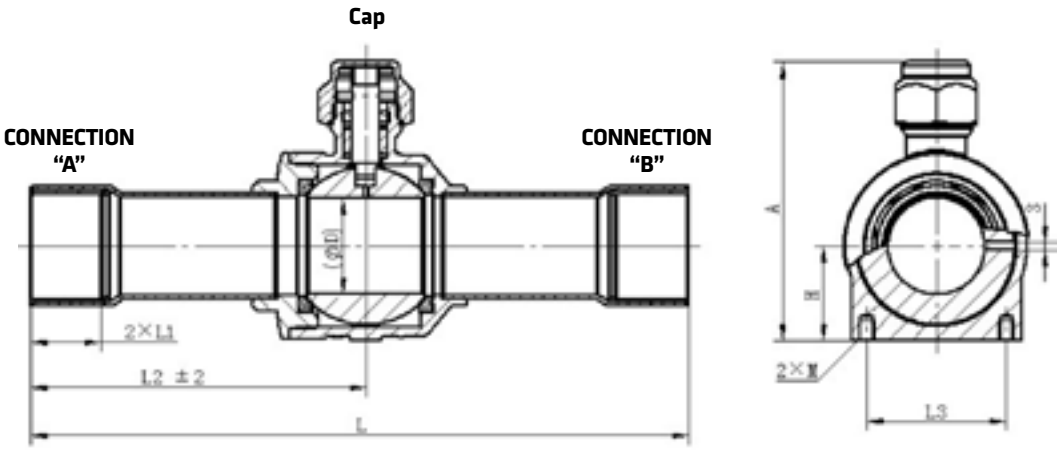


| Model | L | L1 | L2 | L3 | D | H | A | M | Weight |
|---|---|---|---|---|---|---|---|---|---|
| | [mm] | [mm] | [mm] | [mm] | [mm] | [mm] | [mm] | [mm] | [g] |
| CBVT 02H002 | 126 | 8 | 66.5 | 16 | 10 | 14 | 50,4 | M4×0.7 | 190 |
| CBVT 02H001 | 126 | 8 | 66,5 | 16 | 10 | 14 | 50,4 | M4×0.7 | 176 |
| CBVT 03H001 | 132 | 10 | 69,5 | 16 | 10 | 14 | 50,4 | M4×0.7 | 180 |
| CBVT 03H002 | 132 | 10 | 69.5 | 16 | 10 | 14 | 50,4 | M4×0.7 | 183 |
| CBVT 04H002 | 139 | 12 | 73 | 16 | 10 | 14 | 50,4 | M4×0.7 | 190 |
| CBVT 04H001 | 139 | 12 | 73 | 16 | 10 | 14 | 50,4 | M4×0.7 | 188 |
| CBVT 05H002 | 148 | 16 | 77 | 22 | 14 | 16 | 58,5 | M4×0.7 | 279 |
| CBVT 05H001 | 148 | 16 | 77 | 22 | 14 | 16 | 58,5 | M4×0.7 | 289 |
| CBVT 06H002 | 148 | 16 | 76 | 30 | 19 | 20 | 73 | M4×0.7 | 470 |
| CBVT 06H001 | 152 | 16 | 78 | 30 | 19 | 20 | 72 | M4×0.7 | 491 |
| CBVT 07H001 | 189 | 19 | 97 | 30 | 19 | 20 | 73 | M4×0.7 | 526 |
| CBVT 09H002 | 185,5 | 20 | 95 | 38 | 25 | 27 | 85.3 | M4×0.7 | 748 |
| CBVT 09H001 | 185,5 | 20 | 95 | 38 | 25 | 27 | 85,3 | M4×0.7 | 749 |
| CBVT 11H001 | 204 | 25 | 105 | 48 | 32 | 37 | 105 | M6×1.0 | 1814 |
| CBVT 13H001 | 260 | 28 | 134 | 55 | 38 | 43,5 | 118,5 | M6×1.0 | 2734 |
| CBVT 13H002 | 260 | 28 | 134 | 55 | 38 | 43,5 | 118,5 | M6×1.0 | 2736 |
| CBVT 17H001 | 284 | 33 | 145 | 74 | 50 | 58,5 | 145 | M6×1.0 | 5787 |

# BALL VALVE

*2) Models with Stainless-Steel Butt-Welding Connections*

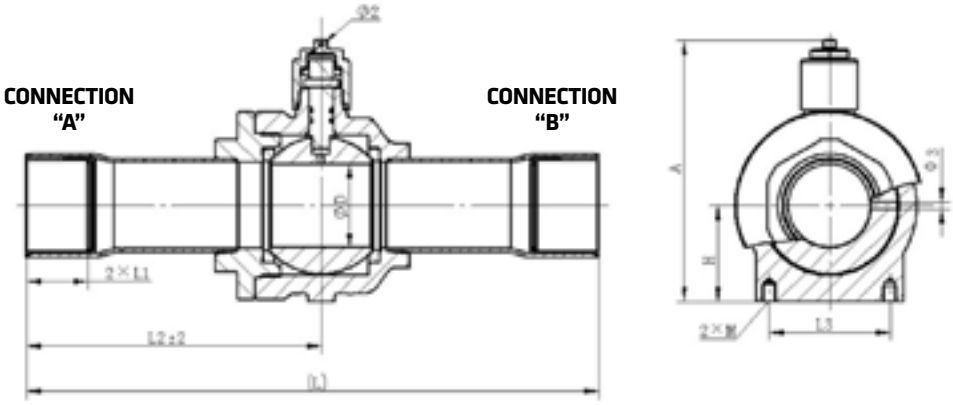


| Model | L | L1 | L2 | L3 | D | H | A | M | Weight |
|---|---|---|---|---|---|---|---|---|---|
| | [mm] | [mm] | [mm] | [mm] | [mm] | [mm] | [mm] | [mm] | [g] |
| CBVT 03H302 | 132 | 8 | 69,5 | 16 | 10 | 14 | 47,7 | M4×0.7 | 184 |
| CBVT 04H302 | 139 | 8 | 73 | 16 | 10 | 14 | 47,7 | M4×0.7 | 188 |
| CBVT 05H301 | 148 | / | 77 | 22 | 14 | 16 | 58,7 | M4×0.7 | 269 |
| CBVT 06H302 | 148 | 8 | 76 | 30 | 19 | 20 | 73 | M4×0.7 | 481 |
| CBVT 07H301 | 185 | / | 94,5 | 30 | 19 | 20 | 73 | M4×0.7 | 512 |
| CBVT 09H302 | 205 | / | 105 | 38 | 25 | 27 | 85.3 | M4×0.7 | 760 |
| CBVT 11H301 | 205 | / | 106 | 48 | 32 | 37 | 105 | M6×1.0 | 1836 |
| CBVT 13H302 | 242 | / | 125 | 55 | 38 | 43,5 | 118,5 | M6×1.0 | 2853 |

***EBV*** *SERIES*

# 2-WAYS ELECTRONIC BALL VALVES

EBV electric ball valve can adjust the refrigerant flow and cut off the refrigerant passage according to the system operating conditions, and is suitable for occasions with requirements such as flow resistance, liquid hammer, opening and closing noise and energy con-sumption. It can replace the pressure regulating valve, ele-ctronic expansion valve and solenoid valve at the same time, and play the role of pressure regulation and refrigerant on-off. In the R32 system, it can be used as a safety valve to immediatelycut off the system circuit once a refrigerant leak is detected.

## FEATURES

**SOLENOID VALVE FUNCTION:**

- BIDIRECTIONAL ON-OFF CONTROL
- SLOWLY OPEN AND CLOSE, AVOID WATER HAMMER AND FLUID IMPACT NOISE
- ENERGY-SAVING, ONLY ENERGY CONSUMPTION DURING THE OPERATION PROCESS
- FULL-PORT BALL VALVE CORE, LARGE FLOW, LOW PRESSURE LOSS

**FLOW REGULATE FUNCTION:**

- FULL OPEN FLOW IS LARGE, PRESSURE LOSS IS SMALL
- HIGH PRECISION IN SMALL FLOW REGULATION
- LOW INTERNAL LEAKAGE, FULLY CLOSED CAN BE USED AS A SHUT-OFF VALVE

### GENERAL SPECIFICATIONS

- Applicable for all common HCFC, HFC refrigerants such as: R134a, R404A, R407C, R410A, R32, R454B etc.
- Medium temperature TS min./max.: -40°C to +120°C (depending on the model)
- Ambient temperature min./max.: -30°C to +65°C (depending on the model)
- Max. working pressure: 50 bar
- Kv values : from 3 to 38.5 m3/h
- Certifications: PED / UL / LVD

# 2-WAYS ELECTRONIC BALL VALVES

## MODEL DESIGNATION

**EBV X03 H - XXX**

- ADDITIONAL DIGITS
- SOLDER CONNECTION
- CV VALUE
- BLANK = 2 WAYS VALVE
  3 = 3 WAYS VALVE
- PRODUCT FAMILY

## ELECTRICAL PARAMETERS

- Rated voltage: 12VDC
- Excitation mode: 2-2 phase excitation mode
- Excitation speed: indicated on the coil and valve drawings
- Coil resistance:
  46 Ω for PQ-M10 (unipolar) or
  72 Ω for PQ-M35 (bipolar)
  52 Ω for built in motor
- Insulation class of coil: E
- Protection class: IP 67

## GENERAL CHARACTERISTICS

*2 ways valves models with separated coil*

| Model | Part Number | Kv | Number of steps | MWP | MOPD | Medium T° | Ambient T° | Ø | Weight |
|---|---|---|---|---|---|---|---|---|---|
| | | [m³/h] | | [Bar] | [Bar] | [°C] | [°C] | | [g] |
| EBV03H001 | 10156006201 | 3.0 | 2800 | 50 | H->L : 30<br>L->H : 30 | -40~120 | -30~70 | 3/8″ | 0.17 |
| EBV03H002 | 10156006601 | 5.1 | 2800 | | | | | ½″ | 0.17 |
| EBV05H050 [1&2] | 10156006301 | 8.6 | 4000 | | H->L : 30<br>L->H : 30 | | | 5/8″ | 0.36 |
| EBV05H051 [1&2] | 10156007101 | 8.6 | 4000 | | | | | ¾″ | 0.38 |
| EBV07H-002 [1] | 10156002901 | 17.1 | 2800 | | H->L : 15<br>L->H : 5 | -30~120 | | 7/8″ | 0.52 |
| EBV07H-003 [1] | 10156003101 | 17.1 | 2800 | | | | | 1″1/8 | 0.56 |
| EBV07H-006 [1] | 10156006801 | 17.1 | 2800 | | H->L : 30<br>L->H : 15 | | | 7/8″ | 0.54 |
| EBV09H008 [1&2] | 10156005701 | 38.5 | 4000 | | H->L : 10 | -40~120 | | 1″1/8 | 0.85 |
| EBV09H009 [2] | 10156005801 | 38.5 | 4000 | | | | | 2″1/8 | 0.85 |
| EBV09H010 [2] | 10156006401 | 38.5 | 4000 | | | | | 1″5/8 | 0.78 |
| EBV09H-001 [3] | 10156002201 | 38.5 | 3500 | | H->L : 10<br>L->H : 5 | -30~120 | | 1″1/8 | 1.25 |

[1] models with SUS304 tube material + copper connections
[2] models suitable with oil free system
[3] With built in motor
H-> L = Normal flow direction / L->H = Reverse flow direction

# 2-WAYS ELECTRONIC BALL VALVES

| Coil model | Part Number | Coil type | Suitable with |
|---|---|---|---|
| PQ-M10012-004002 | 10810208801 | Unipolar | EBV03/EBV05/EBV07/EBV09 |
| PQ-M10012-004274 | 10810231901 | Unipolar | |
| PQ-M10012-004213 | 10810232402 | Unipolar | |
| PQ-M10012-004035 | 10810210602 | Unipolar | |
| PQ-M35012-001003 | 10810213502 | Bipolar | |

## DIMENSIONS

*(unit is mm)*

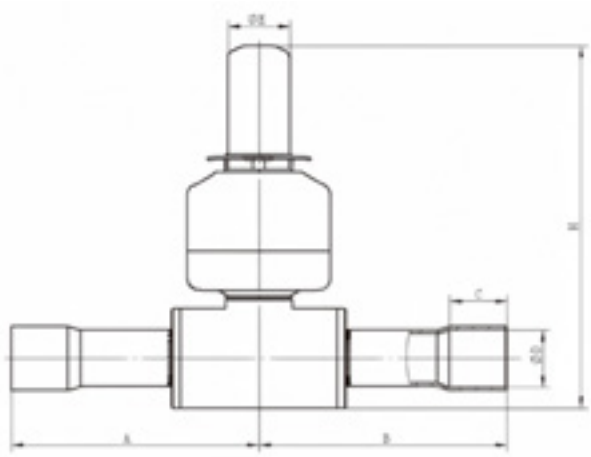

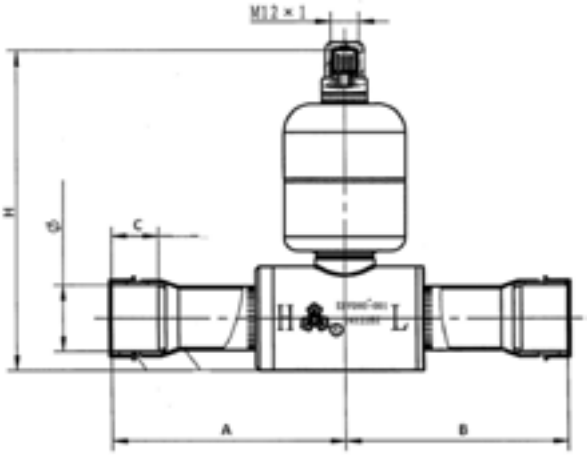


| Model | Flow direction | Tube diameter | | Dimensions | | | | |
|---|---|---|---|---|---|---|---|---|
| | | øD | | A | B | C | øE | H |
| | | [inch] | [mm] | [mm] | [mm] | [mm] | [mm] | [mm] |
| EBV03H001 | Bi-flow | 3/8 | 9.52 | 55 | 55 | 10 | 17.3 | 79 |
| EBV03H002 | Bi-flow | 1/2 | 12.7 | 51.5 | 51.5 | 12 | 17.3 | 79 |
| EBV05H050 | Bi-flow | 5/8 | 15.88 | 69.4 | 69.4 | 13 | 17.3 | 102 |
| EBV05H051 | Bi-flow | 3/4 | 19.05 | 80.6 | 80.6 | 17 | 17.3 | 102 |
| EBV07H-002 | Bi-flow | 7/8 | 22.2 | 93 | 90 | 17.5 | 17.3 | 109 |
| EBV07H-003 | Bi-flow | 1-1/8 | 28.6 | 102 | 100 | 20 | 17.3 | 109 |
| EBV07H-006 | Bi-flow | 7/8 | 22.2 | 93 | 90 | 17.5 | 17.3 | 110 |
| EBV09H008 | Uni-flow | 1-1/8 | 28.6 | 113 | 109 | 32.8 | 17.3 | 109 |
| EBV09H009 | Uni-flow | 2-1/8 | 54 | 91 | 88 | 30 | 17.3 | 119 |
| EBV09H010 | Uni-flow | 1-5/8 | 41.5 | 91 | 88 | 30 | 17.3 | 119 |
| EBV09H-001[1] | Bi-flow | 1-1/8 | 28.8 | 100 | 96 | 20 | - | 139 |

[1] With built in motor – right drawing

# 2-WAYS ELECTRONIC BALL VALVES

| Coil Model | Dimensions [mm] | | | | | Connector type |
|---|---|---|---|---|---|---|
| | ØA | B | C | D | ØE | |
| PQ-M10012-004002 | 38.5 | 35.8 | 37.6 | 700 | 17.5 | XHP-5 |
| PQ-M10012-004274 | 38.5 | 35.8 | 37.6 | 1500 | 17.5 | XHP-5 |
| PQ-M10012-004213 | 38.5 | 35.8 | 37.6 | 2000 | 17.5 | XHP-5 |
| PQ-M10012-004035 | 38.5 | 35.8 | 37.6 | 5000 | 17.5 | XHP-5 |
| PQ-M35012-001003 | 38.5 | 35.5 | 25.6 | 6000 | 17.5 | Lead wire |

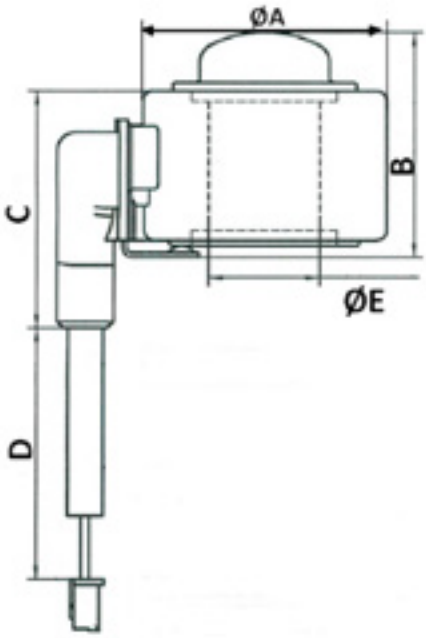

***EBV*** *SERIES*

# 3-WAYS ELECTRONIC BALL VALVES

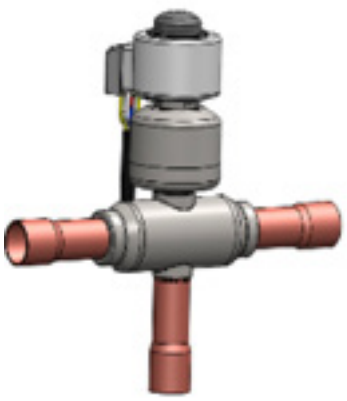

The EBV refrigerant three-way electronic ball valve can be used in commercial air conditioning systems for heat recovery, constant temperature dehumidification, and other occasions, achieving refrigerant on-off and flow regulation for the A and B outlet paths.

## FEATURES

- FULL STAINLESS STEEL VALVE BODY DESIGN, HIGH STRENGTH, CORROSION RESISTANT
- PRECISE FLOW DISTRIBUTION ADJUSTMENT, MINIMAL FLOW FLUCTUATION
- COMPACT DESIGN, REQUIRING MINIMAL INSTALLATION SPACE
- LIGHTWEIGHT DESIGN, GOOD VIBRATION RESISTANCE
- HIGH OPERATING LIFE

### GENERAL SPECIFICATIONS

- Applicable for all common HCFC, HFC refrigerants such as: R134a, R404A, R407C, R410A, R32, R454B etc.
- Medium temperature TS min./max.: -40°C to +120°C
- Ambient temperature min./max.: -30°C to +60°C
- Max. working pressure: 50 bar
- Kv value: from 3.5 $m^3/h$
- Certifications: PED / UL / LVD

### ELECTRICAL PARAMETERS

- Rated voltage: 12VDC (unipolar)
- Excitation mode: 2-2 phase excitation mode unipolar, and bipolar for some models
- Excitation speed: 100 pps
- Coil resistance:
  46 Ω for PQ-M10 (unipolar) or 72 Ω for PQ-M35 (bipolar)
  52 Ω for built in motor
- Insulation class of coil: E
- Protection class: IP 67

# 3-WAYS ELECTRONIC BALL VALVES

## GENERAL CHARACTERISTICS

*3 ways valves models*

All these models can run in both directions:

From C to A or C to B
Or
from A to C and B to C

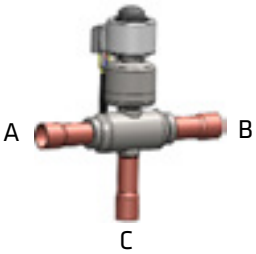


| Valve Model | Part Number | Kv | Number of steps | MWP | MOPD | Medium T° | Ambient T° | Ø | Weight |
|---|---|---|---|---|---|---|---|---|---|
| | | [m³/h] | | [Bar] | [Bar] | [°C] | [°C] | | [g] |
| EBV305H001 | 10156006101 | 2.6 | 4400 | 50 | 31 | -40~120 | -30~70 | 5/8″ | 0.41 |
| EBV305H002 | 10156006501 | 2.6 | 4400 | | 30 | -40~120 | | ½″ | 0.43 |
| EBV309H001[1] | 10156005401 | 8.6 | 3800 | | 28 | -40~135 | | 7/8 | 1.47 |

[1] with bent tubes and built in motor

| Coil model | Part Number | Coil type | Suitable with |
|---|---|---|---|
| PQ-M10012-004002 | 10810208801 | Unipolar | EBV305 |
| PQ-M10012-004274 | 10810231901 | Unipolar | |
| PQ-M10012-004213 | 10810232402 | Unipolar | |
| PQ-M10012-004035 | 10810210602 | Unipolar | |
| PQ-M35012-001003 | 10810213502 | Bipolar | |

# 3-WAYS ELECTRONIC BALL VALVES

## DIMENSIONS

*(unit is mm)*

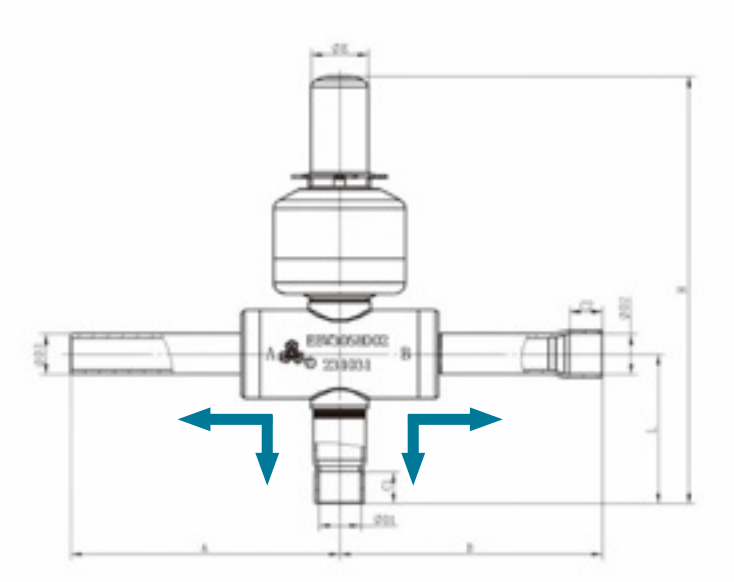

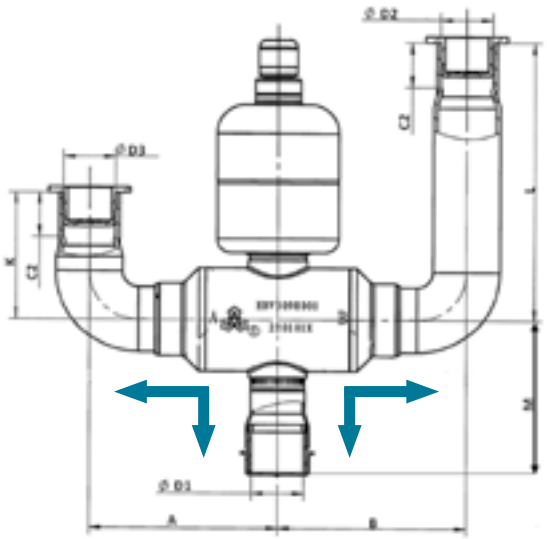

| Model | Tube dimensions | | | | | Dimensions | | | | | | |
|---|---|---|---|---|---|---|---|---|---|---|---|---|
| | øD1 | øD2 | øD3 | C1 | C2 | A | B | L | K | M | H | øE |
| | [inch] | [inch] | [inch] | [mm] | [mm] | [mm] | [mm] | [mm] | [mm] | [mm] | [mm] | [mm] |
| EBV305H001 | 5/8 | 5/8 | 5/8 | 12.7 | 16 | 72 | 74 | 47.3 | - | - | 135.2 | 17.3 |
| EBV305H002 | 1/2 | 1/2 | 1/2 | 10 | 10 | 81.8 | 79.9 | 47.3 | - | - | 135.2 | 17.3 |
| EBV309H001[1] | 7/8 | 7/8 | 7/8 | 19 | 19 | 80.6 | 80.6 | 120 | 55 | 56 | - | - |

[1] with bent tubes and built in motor – Right drawing

| Coil Model | Dimensions [mm] | | | | | Connector type |
|---|---|---|---|---|---|---|
| | ØA | B | C | D | ØE | |
| PQ-M10012-004002 | 38.5 | 35.8 | 37.6 | 700 | 17.5 | XHP-5 |
| PQ-M10012-004274 | 38.5 | 35.8 | 37.6 | 1500 | 17.5 | XHP-5 |
| PQ-M10012-004213 | 38.5 | 35.8 | 37.6 | 2000 | 17.5 | XHP-5 |
| PQ-M10012-004035 | 38.5 | 35.8 | 37.6 | 5000 | 17.5 | XHP-5 |
| PQ-M35012-001003 | 38.5 | 35.5 | 25.6 | 6000 | 17.5 | Lead wire |

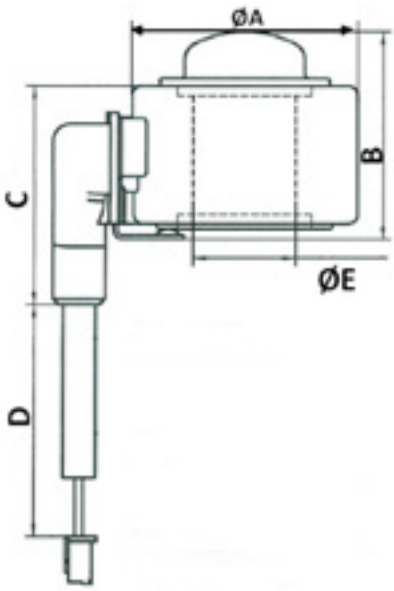

# 3-WAYS ELECTRONIC BALL VALVES

## ACCESSORIES

M12 cables for the built-in motor EBV models

| Model | Part Number | Cable Length (L) [mm] | Connector type | Tolerance [mm] | IP level |
|---|---|---|---|---|---|
| Y02B | 20156013602 | 2000 | XHP-5 | +/-40 | 67 |
| Y04B | 20156014602 | 4000 | XHP-5 | +/-80 | 67 |
| Y08B | 20156024402 | 8000 | XHP-5 | +/-160 | 67 |
| Y02A | 20130674902 | 2000 | Lead wire | +/-40 | 67 |
| Y04A | 20130675002 | 4000 | Lead wire | +/-80 | 67 |
| Y08A | 20130675102 | 8000 | Lead wire | +/-160 | 67 |

YOx**B** cable type

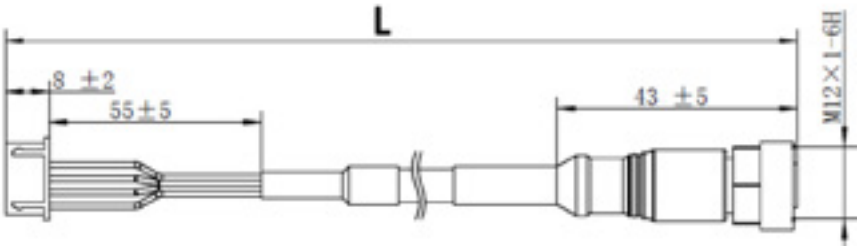


YOx**A** cable type

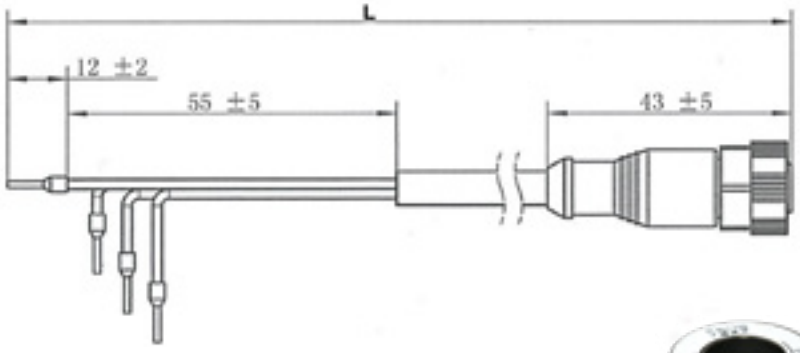

### Manual magnetic tool

The magnetic tool can be used to open/close the valve manually

| | Magnet model | Part Number |
|---|---|---|
| Uni polar motor | DPF-T-FZ03 | 34130309102 |

### Drivers for EBV

| | Driver model | Part Number |
|---|---|---|
| Uni polar | SEC611-R06 | 10680005102 |
| Bi polar | VSD1006 | 10685001202 |
| Bi polar | VSD2001 | 10685000602 |
| Manual operator | MD02-R5 | 10680002602 |

***EBVC*** *SERIES*

# ELECTRIC THREE-WAY BALL VALVE

Suitable for heat recovery applications in $CO_2$ transcritical systems, the medium enters from the bottom pipe and exits from the left or right pipe, which can open or close the refrigerant flow path.

## FEATURES

- STAINLESS STEEL PIPE WITH COPPER LINING FOR EASY WELDING
- LOW INTERNAL LEAKAGE
- HIGH LIFE CYCLE: 50,000 TIMES
- THE ACTUATOR CONNECTION BRACKET IS POSITIONED SYMMETRICALLY, AND ITS BALANCE IS BETTER, MAKING THE CONNECTION BETWEEN THE ACTUATOR AND THE VALVE MORE RELIABLE.

### GENERAL SPECIFICATIONS

- Applicable medium: R744
- Ambient temperature: -40°C/+70°C
- Medium temperature: -40°C/+150°C
- Max. working pressure: 140 bar
- PED is ready, UL certification in progress

### TECHNICAL PARAMETERS

| Model | U11 | Connections Ød ODF | | Kv | PED category |
|---|---|---|---|---|---|
| | | [inch] | [mm] | [m³/h] | |
| EBVC303H001 | 10156008002 | - | 10 | 1.9 | Art 4.3 |
| EBVC304H001 | 10156007802 | - | 12 | 2.0 | Art 4.3 |
| EBVC306H001 | 10156007902 | - | 18 | 4.3 | Art 4.3 |
| EBVC307H001 | 10156007602 | 7/8 | 22 | 7.2 | Art 4.3 |
| EBVC309H001 | 10156006902 | 1-1/8 | - | 12.4 | Art 4.3 |

# ELECTRIC THREE-WAY BALL VALVE

## DIMENSION

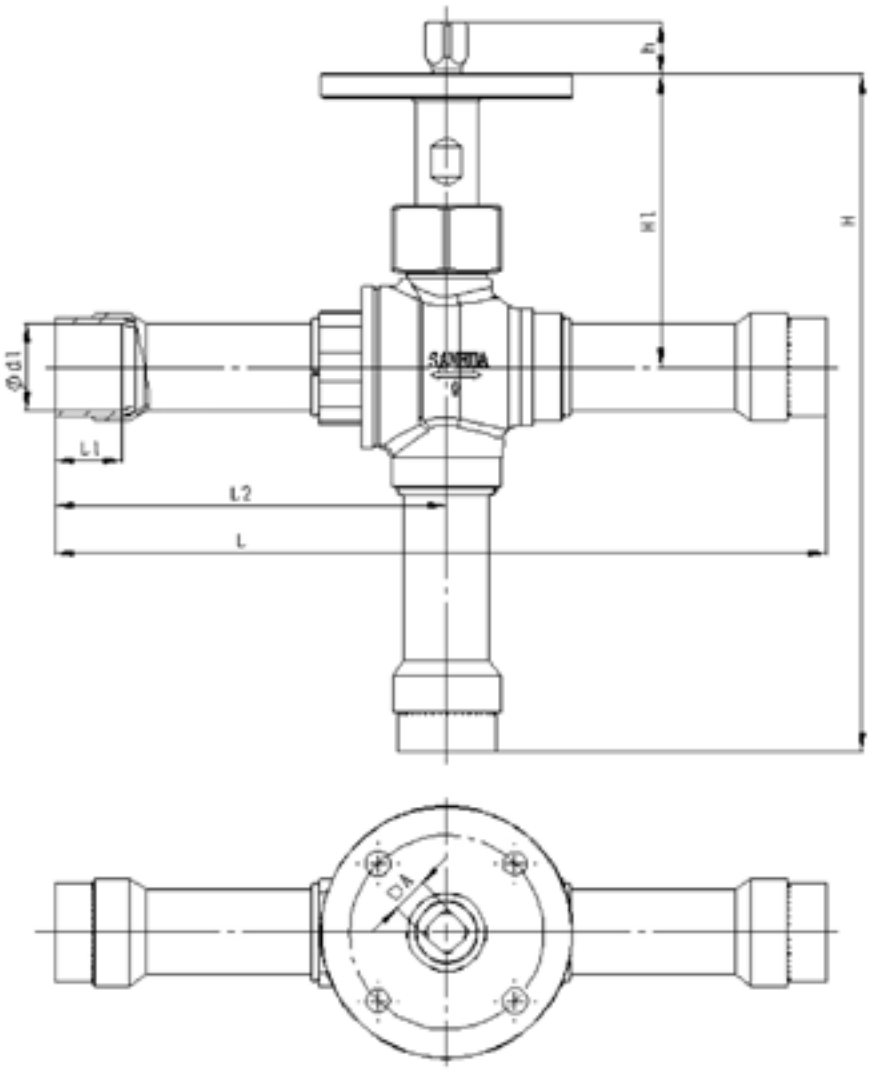


| Model | L | L1 | L2 | H1 | H | h | Φd1 | □A | Flange size | Weight |
|---|---|---|---|---|---|---|---|---|---|---|
| | [mm] | [mm] | [mm] | [mm] | [mm] | [mm] | [mm] | [mm] | / | [g] |
| EBVC303H001 | 136 | 10 | 71 | 66 | 131 | 13 | 10.1 | 9 | F05 | 475 |
| EBVC304H001 | 150 | 13 | 78 | 66 | 138 | 13 | 12.1 | 9 | F05 | 490 |
| EBVC306H001 | 156 | 17 | 79 | 75.5 | 153 | 13 | 18.2 | 9 | F05 | 800 |
| EBVC307H001 | 199 | 17.5 | 101 | 75.5 | 174.5 | 13 | 22.4 | 9 | F05 | 860 |
| EBVC309H001 | 251 | 20 | 122.5 | 80 | 195 | 14 | 28.8 | 9 | F05 | 1470 |

***EBD*** *SERIES*

# ACTUATOR

EBD series actuators, torque 10 and 20 N·m, can control two-way, three-way ball valves and other torque adaptation valves, support on/off function.

## FEATURES

- HIGH LIFE CYCLE: 60,000 TIMES (WITH 20 N·M LOADED), 100.000 TIMES (WITH 10 N·M LOADED)
- VALVE BODY OPENING CAN BE SEEN BY DIAL SCALE
- THE ACTUATOR SUPPORTS MANUAL OPERATION AND AUTOMATIC OPERATION, AND CAN BE SWITCHED FREELY
- 2 POSITIONING PINS AND 2 THREADED HOLES ARE DESIGNED FOR EASY INSTALLATION WITH THE VALVE

### GENERAL SPECIFICATIONS

- Size for the latch fitting the mounting shaft: 9*9 and 14*14
- Fitted flange: F05
- Ambient temperature: -20°C/+70°C
- Conforms to LVD

### TECHNICAL PARAMETERS

| Model | U11 Code | Function | Rated Voltage | Voltage range | Frequency | Power/Torque | Running time | Rotation range | Degree of protection |
|---|---|---|---|---|---|---|---|---|---|
| | | | (V) | (V) | (Hz) | (W/N·m) | (s) | (°) | |
| EBD1C01 | 101580009 | On/off | AC 220 | AC 85~265 | 50/60 | 3.5/10; 4.0/20 | 90 | 95 | IP55 |

# ACTUATOR

## DIMENSION

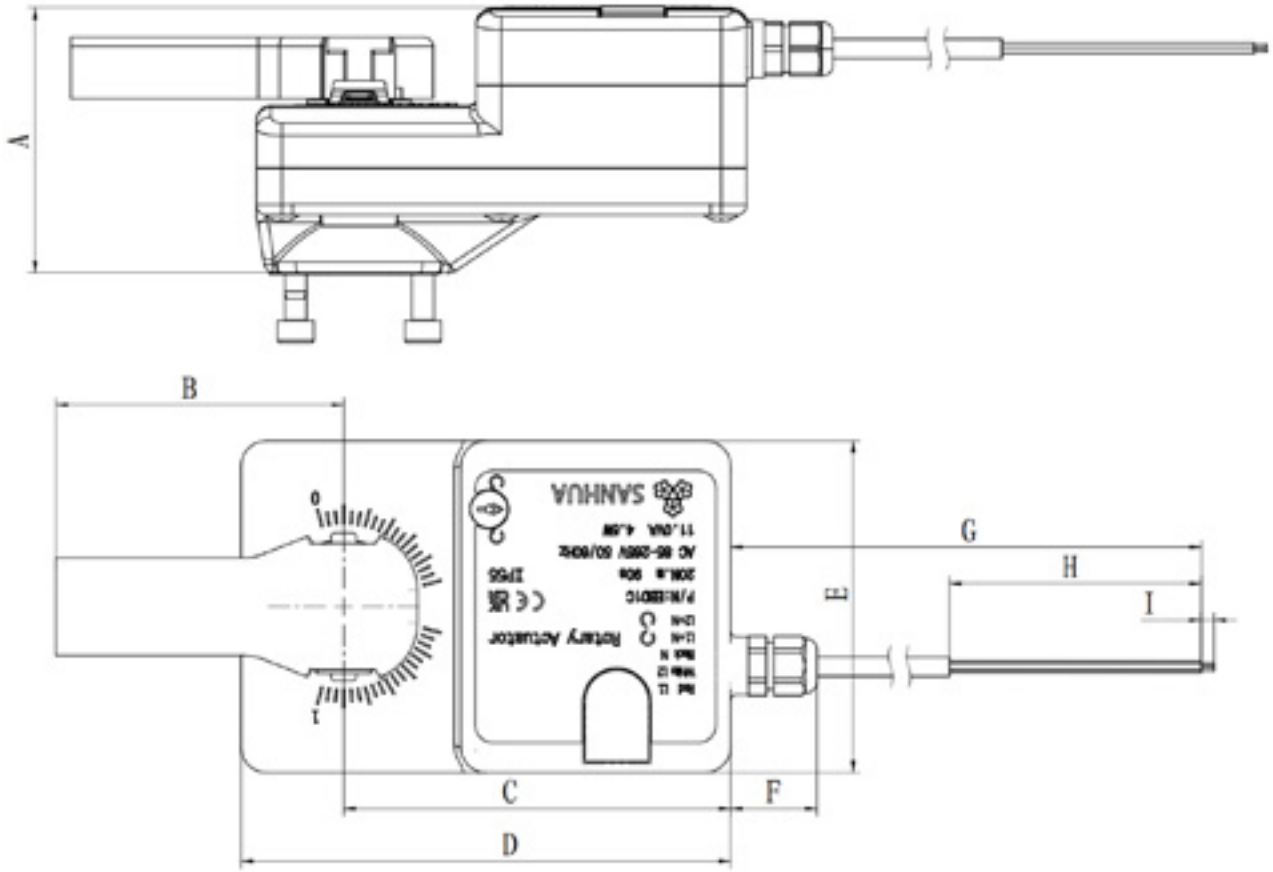


| Model | A | B | C | D | E | F | G | H | I | J | Flange size | Weight |
|---|---|---|---|---|---|---|---|---|---|---|---|---|
| | [mm] | [mm] | [mm] | [mm] | [mm] | [mm] | [mm] | [mm] | [mm] | [mm] | / | [g] |
| EBD1C01 | 73 | 80 | 108 | 136 | 92 | 24 | 900 | 70 | 3.5 | Φ10 | F05 | 1200 |

**Note:** The EBD1C01 mounting shaft is suitable for 9*9 pins. If you need to adapt 14*14 pins, please contact Sanhua.

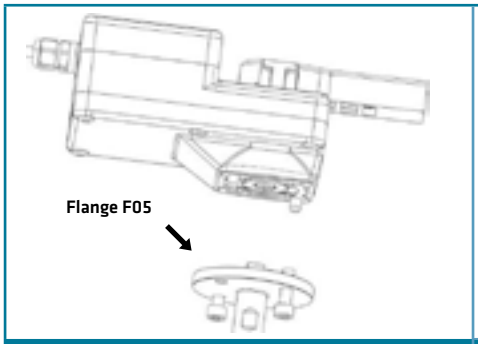


**The EBD actuator must fit the F05 flange**

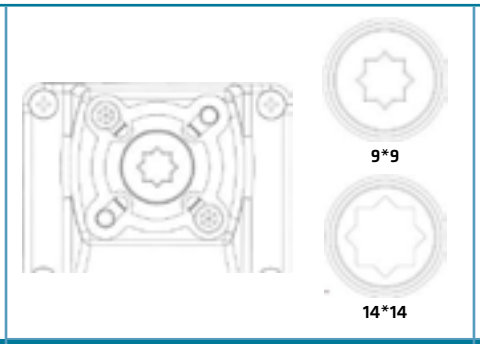


**The EBD actuator can fit 9*9 and 14*14 pin**

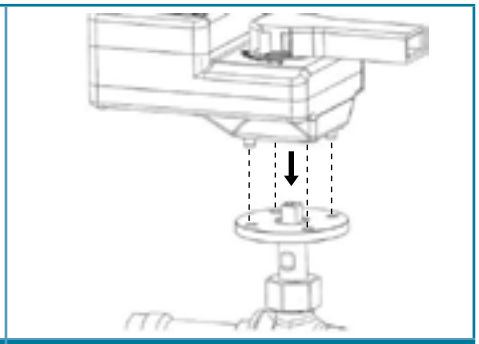

**The actuator and valve are installed together**

***GZJA*** *SERIES*

# GZJA SUB ASSEMBLY SERIES: BALL VALVE + CHECK VALVE [R744 SUB-CRITICAL]

GZJA sub-assemblies include a CBVT ball valve (PS=140bar) and a BCV check valve (PS=90bar); they are typically used in commercial $CO_2$ refrigeration applications, to isolate specific parts or components present in the system. With the ball valves in closed position the refrigerant cannot achieve the isolated component, but it can be suck up through the check valves. A typical application is keeping evaporator coil isolated without over pressurizing due to warm up.

**Figure 1**

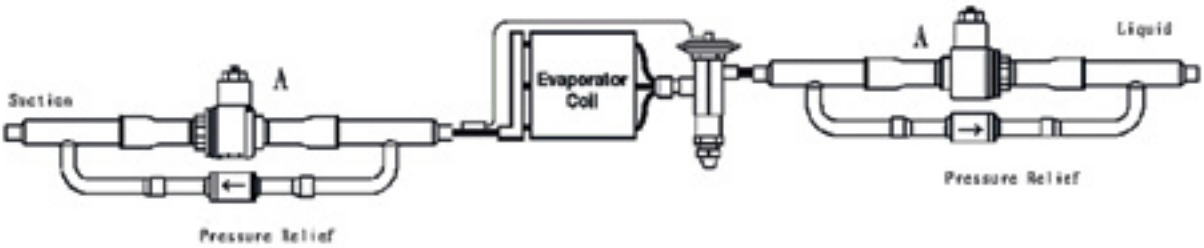


The symbol 'A' indicates the pressure relief side of the sub assembly. Any pressure builds up on the 'A' side with the ball valve in the closed position can relieve to the other side of the ball valve. When used on an evaporator coil, the 'A' side of the assembly should always be on the coil side. (Refer to Figure 1.)

## FEATURES

- RELIABLE WELDING QUALITY, AND AVOID WELDING MISTAKE OF CHECK VALVE DIRECTION
- COMPACT DESIGN TO SAVE INSTALLATION SPACE

### GENERAL SPECIFICATIONS

- Applicable for R744 ($CO_2$)
- Medium temperature TS min./max.: -40°C/+90°C
- Max. Operation pressure PS: 9MPa (90bar)
- Certification: PED declaration
- UL certification – Not available (on request)

# GZJA SUB ASSEMBLY SERIES: BALL VALVE + CHECK VALVE [R744 SUB-CRITICAL]

## GENERAL CHARACTERISTICS

| Model | Part Number | Solder connection Ø d (ODM) | KV [BALL VALVE] | KV [CHECK VALVE] | Wrench Size Cap | PED Category |
|---|---|---|---|---|---|---|
| | | [inch] | [m³/h] | [m³/h] | [mm] | |
| GZJA66004 | 10245294201 | 3/8 | 13,8 | 0,9 | H19 | 4.3 |
| GZJA66005 | 10245294301 | 1/2 | 13,8 | 0,9 | H19 | 4.3 |
| GZJA66006 | 10245294401 | 5/8 | 13,8 | 0,9 | H19 | 4.3 |
| GZJA66007 | 10245294501 | 3/4 | 20,6 | 0,9 | H19 | 4.3 |
| GZJA66008 | 10245294601 | 7/8 | 29,0 | 0,9 | H19 | 4.3 |
| GZJA66009 | 10245294701 | 1 1/8 | 54,2 | 0,9 | H19 | 4.3 |

## DIMENSIONS AND WEIGHTS

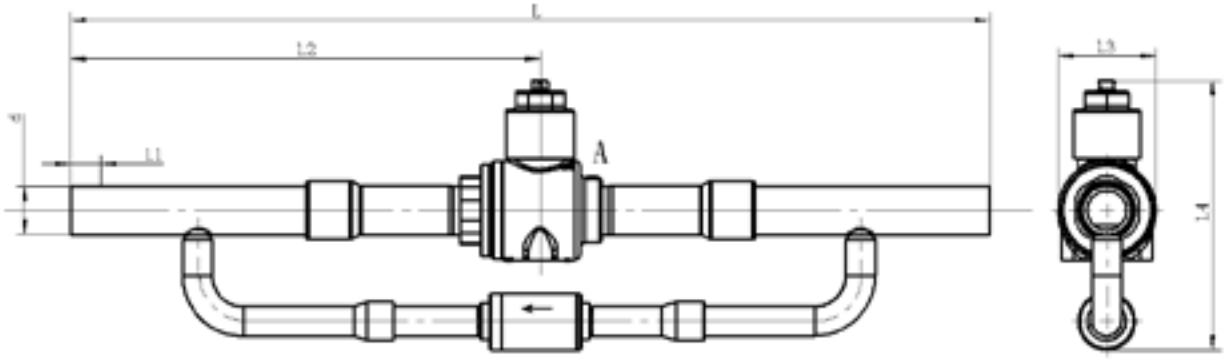


| Model | Part number (Industrial pack) | Solder connection Ø d (ODM) | Wrench Size Cap | | | | | |
|---|---|---|---|---|---|---|---|---|
| | | | L | L1 | L2 | L3 | L4 | Weight |
| | | [inch] | [mm] | [mm] | [mm] | [mm] | [mm] | [g] |
| GZJA66004 | 10245294201 | 3/8 | 302 | 10 | 151 | 32.2 | 87.3 | 550 |
| GZJA66005 | 10245294301 | 1/2 | 302 | 10 | 151 | 32.2 | 88 | 550 |
| GZJA66006 | 10245294401 | 5/8 | 302 | 10 | 151 | 32.2 | 88 | 550 |
| GZJA66007 | 10245294501 | 3/4 | 383.3 | 10 | 196.7 | 40.2 | 104.8 | 940 |
| GZJA66008 | 10245294601 | 7/8 | 383.3 | 10 | 196.7 | 40.2 | 105.4 | 1000 |
| GZJA66009 | 10245294701 | 1 1/8 | 382.6 | 10 | 196.7 | 53.6 | 111.8 | 1600 |

***YCVS*** *SERIES*

# CHECK VALVE PISTON TYPE

Piston type check valves are designed for installation in commercial refrigerating systems and in residential or industrial air conditioning plants. They are used to control the unidirectional flow of refrigerant so as to prevent backflow. A specific section of the present datasheet is related to the Check Valves models suitable for installation in system using flammable refrigerants HFO (categories A2* and A2L*), and Hydrocarbons HC (category A3*).

*According to ANSI-ASHRAE 34-2016 and EN-378-1 ANNEX EN 378-1:2016 Annex E

## FEATURES

- THIS VALVE CAN ENSURE THE ONLY CORRECT FLOW DIRECTION
- EQUIPPED WITH DAMPING SPRING TO FREELY INSTALL THE VALVE AT POSITIONS WITH PRESSURE PULSE
- AVAILABLE IN 2 LAYOUTS DEPENDING BY SIZE:
  STRAIGHTWAY VALVE AND L-SHAPE VALVE, EASY TO CONNECT.
- SPECIAL VERSION OF CHECK VALVE EQUIPPED WITH REINFORCED SPRING, APPLICABLE TO COMPRESSOR DISCHARGE PIPES IN SINGLE OR MULTI COMPRESSOR SYSTEMS (YCVSH & YCVSH-R SERIES)
- LOW PRESSURE DROP DURING OPERATION
- TYPES WITH PORT SIZE BIGGER 25MM HAVING PED CAT.II BY TUV RHEINLAND.

### GENERAL SPECIFICATIONS

- Applicable for all common HCFC, HFC, HC refrigerants such as: R22, R134a, R404A, R407C, R410A, R507A, R407A/F, R290[1)], R32[1)], R1234yf[1)], R1234ze[1)], R448A/R449A, R452A, R450A/R513A, R744
- Ambient temperature range: from -30°C to +60°C
- Medium temperature TS min./max.:
  -50°C / 150°C
- Max. operating pressure PS:
  4,9 MPa (49 bar)
- Installation position:
  - Flow direction corresponds to the arrow
  - The suggested positions are described in the installation instructions
- Declaration of Conformity issued in accordance with PED directive (2014/68/EU)
- Certifications: UL/CSA

# CHECK VALVE PISTON TYPE

## GENERAL CHARACTERISTICS

### *1a. Models with normal piston spring*

| Model | Part Number | Type | Connections Ø d ODF | | Kv | Min. OPD | DN | PS | max TS | PED Category [Fluid Group 1] | PED Category [Fluid Group 2] |
|---|---|---|---|---|---|---|---|---|---|---|---|
| | | | [inch] | [mm] | [m³/h] | [kPa] | [mm] | [bar] | [°C] | | |
| YCVS2H02 | 10162001502 | S | - | 6 | 0,56 | 5 | 5,0 | 49 | 150 | Art. 4.3 | Art. 4.3 |
| YCVS2H01 | 10162001602 | S | 1/4 | - | 0,56 | 5 | 5,0 | 49 | 150 | Art. 4.3 | Art. 4.3 |
| YCVS3H01 | 10162000402 | S | 3/8 | - | 1,60 | 5 | 7,9 | 49 | 150 | Art. 4.3 | Art. 4.3 |
| YCVS3H02 | 10162000502 | S | - | 10 | 1,60 | 5 | 7,9 | 49 | 150 | Art. 4.3 | Art. 4.3 |
| YCVS4H02 | 10162000802 | S | - | 12 | 2,64 | 5 | 11,1 | 49 | 150 | Art. 4.3 | Art. 4.3 |
| YCVS4H01 | 10161001302 | S | 1/2 | - | 2,64 | 5 | 11,1 | 49 | 150 | Art. 4.3 | Art. 4.3 |
| YCVS5H03 | 10161001602 | S | 5/8 | 16 | 4,00 | 5 | 13,0 | 49 | 150 | Art. 4.3 | Art. 4.3 |
| YCVS6H04 | 10162003702 | S | - | 18 | 6,80 | 5 | 17,1 | 49 | 150 | Art. 4.3 | Art. 4.3 |
| YCVS6H03 | 10161001702 | S | 3/4 | - | 6,80 | 5 | 17,1 | 49 | 150 | Art. 4.3 | Art. 4.3 |
| YCVS7H03 | 10161001802 | S | 7/8 | 22 | 6,80 | 5 | 17,1 | 49 | 150 | Art. 4.3 | Art. 4.3 |
| YCVS 20-77GSHC-1 | 10160030002 | L | 7/8 | 22 | 13,20 | 10 | 19,8 | 49 | 150 | Art. 4.3 | Art. 4.3 |
| YCVS 26-88GSHC-1 | 10160037202 | L | - | 28 | 19,02 | 10 | 25,6 | 49 | 150 | Cat.2 | Art. 4.3 |
| YCVS 26-99GSHC-1 | 10160030102 | L | 1 1/8 | - | 19,02 | 10 | 25,6 | 49 | 150 | Cat.2 | Art. 4.3 |
| YCVS 31-BBGSHC-1 | 10160024402 | L | 1 3/8 | 35 | 29,10 | 10 | 31,0 | 49 | 150 | Cat.2 | Art. 4.3 |
| YCVS 31-DDGSHC-1 | 10160037002 | L | 1 5/8 | - | 29,10 | 10 | 31,0 | 49 | 150 | Cat.2 | Art. 4.3 |
| YCVS 31-DDGSHC-2 | 10160032402 | L | - | 42 | 29,10 | 10 | 31,0 | 49 | 150 | Cat.2 | Art. 4.3 |

# CHECK VALVE PISTON TYPE

### *1b. Models with reinforced piston spring*

| Model | Part Number | Type | Connections Ø d ODF | | Kv | Min. OPD | DN | PS | max TS | PED Category [Fluid Group 1] | PED Category [Fluid Group 2] |
|---|---|---|---|---|---|---|---|---|---|---|---|
| | | | [inch] | [mm] | [m³/h] | [kPa] | [mm] | [bar] | [°C] | | |
| YCVSH3H01 | 10162000602 | S | 3/8 | - | 1,60 | 15 | 7,9 | 49 | 150 | Art. 4.3 | Art. 4.3 |
| YCVSH3H02 | 10162000702 | S | - | 10 | 1,60 | 15 | 7,9 | 49 | 150 | Art. 4.3 | Art. 4.3 |
| YCVSH4H02 | 10162001302 | S | - | 12 | 2,64 | 15 | 11,1 | 49 | 150 | Art. 4.3 | Art. 4.3 |
| YCVSH4H01 | 10162001202 | S | 1/2 | - | 2,64 | 15 | 11,1 | 49 | 150 | Art. 4.3 | Art. 4.3 |
| YCVSH5H03 | 10162001102 | S | 5/8 | 16 | 4,00 | 15 | 13,0 | 49 | 150 | Art. 4.3 | Art. 4.3 |
| YCVSH6H04 | 10162003802 | S | - | 18 | 6,80 | 15 | 17,1 | 49 | 150 | Art. 4.3 | Art. 4.3 |
| YCVSH6H03 | 10162001002 | S | 3/4 | - | 6,80 | 15 | 17,1 | 49 | 150 | Art. 4.3 | Art. 4.3 |
| YCVSH7H03 | 10162000902 | S | 7/8 | 22 | 6,80 | 15 | 17,1 | 49 | 150 | Art. 4.3 | Art. 4.3 |
| YCVSH 20-77GSHC-1 | 10160034602 | L | 7/8 | 22 | 13,20 | 30 | 19,8 | 49 | 150 | Art. 4.3 | Art. 4.3 |
| YCVSH 26-88GSHC-1 | 10160023702 | L | - | 28 | 19,02 | 30 | 25,6 | 49 | 150 | Cat.2 | Art. 4.3 |
| YCVSH 26-99GSHC-1 | 10160034702 | L | 1 1/8 | - | 19,02 | 30 | 25,6 | 49 | 150 | Cat.2 | Art. 4.3 |
| YCVSH 31-BBGSHC-1 | 10160037402 | L | 1 3/8 | 35 | 29,10 | 30 | 31,0 | 49 | 150 | Cat.2 | Art. 4.3 |
| YCVSH 31-DDGSHC-1 | 10160037102 | L | 1 5/8 | - | 29,10 | 30 | 31,0 | 49 | 150 | Cat.2 | Art. 4.3 |
| YCVSH 31-DDGSHC-2 | 10160042302 | L | - | 42 | 29,10 | 10 | 31,0 | 49 | 150 | Cat.2 | Art. 4.3 |

**Note:** For the simulation of the performance, please refer to the Sanhua selection tool "Quickfinder" or ask your local support.

# CHECK VALVE PISTON TYPE

## DIMENSIONS AND WEIGHTS

| Models (table 1a) | Models (table 1b) | Type | Dimensions | | | Weight [kg] |
|---|---|---|---|---|---|---|
| | | | ØD [mm] | C [mm] | E [mm] | |
| YCVS2H02 | - | S | 5 | 90 | 18 | 0,046 |
| YCVS2H01 | - | S | 5 | 90 | 18 | 0,046 |
| YCVS3H01 | YCVSH3H01 | S | 8 | 110 | 17 | 0,046 |
| YCVS3H02 | YCVSH3H02 | S | 8 | 110 | 17 | 0,046 |
| YCVS4H02 | YCVSH4H02 | S | 10 | 130 | 21 | 0,069 |
| YCVS4H01 | YCVSH4H01 | S | 10 | 130 | 21 | 0,069 |
| YCVS5H03 | YCVSH5H03 | S | 13 | 140 | 23.5 | 0,107 |
| YCVS6H04 | YCVSH6H04 | S | 17 | 165 | 30 | 0,168 |
| YCVS6H03 | YCVSH6H03 | S | 17 | 165 | 30 | 0,169 |
| YCVS7H03 | YCVSH7H03 | S | 17 | 165 | 30 | 0,174 |
| YCVS 20-77GSHC-1 | YCVSH 20-77GSHC-1 | L | 20 | 132 | 87 | 0,427 |
| YCVS 26-88GSHC-1 | YCVSH 26-88GSHC-1 | L | 26 | 196 | 123 | 1,050 |
| YCVS 26-99GSHC-1 | YCVSH 26-99GSHC-1 | L | 26 | 196 | 123 | 1,132 |
| YCVS 31-BBGSHC-1 | YCVSH 31-BBGSHC-1 | L | 31 | 196 | 123 | 1,154 |
| YCVS 31-DDGSHC-1 | YCVSH 31-DDGSHC-1 | L | 31 | 196 | 123 | 1,182 |
| YCVS 31-DDGSHC-2 | YCVSH 31-DDGSHC-2 | L | 31 | 196 | 123 | 1,184 |

# CHECK VALVE PISTON TYPE

## GENERAL CHARACTERISTICS

***Straight-way***

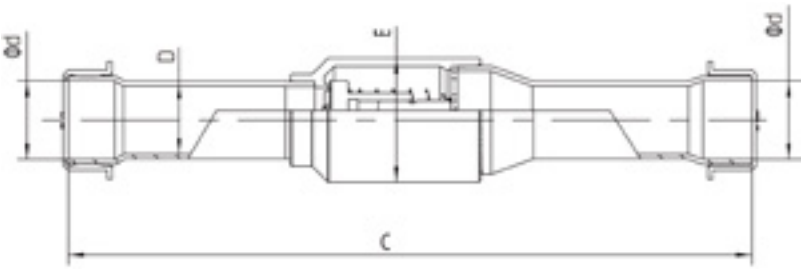


***L-shape***

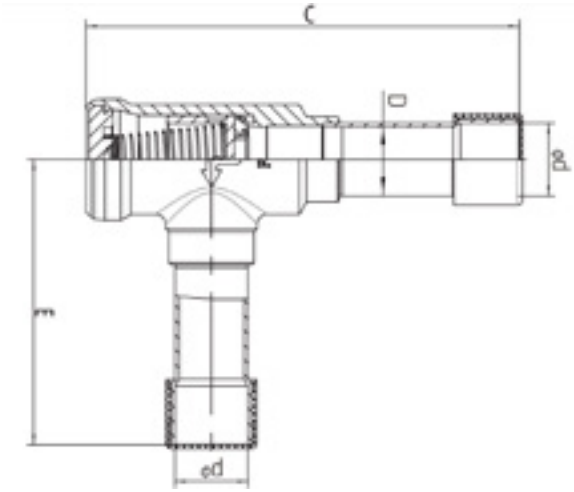

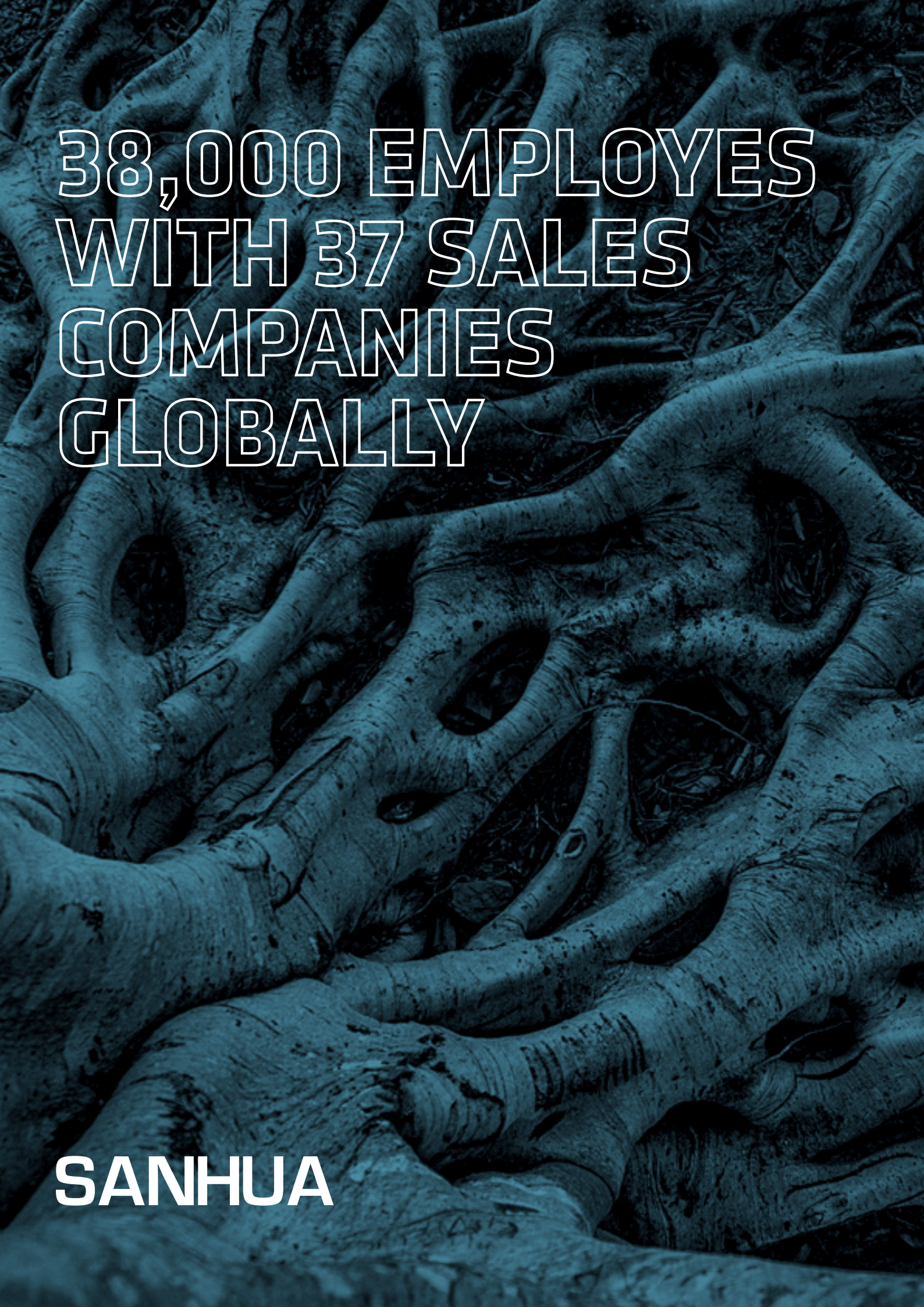
38,000 EMPLOYES
WITH 37 SALES
COMPANIES
GLOBALLY
SANHUA

***CCV-H*** *SERIES*

# CHECK VALVE MAGNETIC TYPE

Magnetic type check valves are designed for installation in commercial refrigerating systems and in residential or industrial air conditioning plants. They are used to control the unidirectional flow of refrigerant to prevent backflow; the magnetic actuator guarantees a high reliability standard. The Design Pressure (PS) of the versions CCV-H [49 bars] and the allowed refrigerant temperatures range [from -40°C to +150°C], permits a safe and reliable installation also in R32 systems without liquid injection and high discharge temperatures.

## FEATURES

- THIS VALVE CAN ENSURE THE ONLY CORRECT FLOW DIRECTION.
- MAGNETIC CLOSURE ELEMENT FOR HIGH RELIABILITY STANDARDS
- COMPACT AND SEALED DESIGN WITH NO RISK OF EXTERNAL LEAKAGE: HIGHLY SUGGESTED FOR APPLICATIONS WITH FLAMMABLE REFRIGERANTS.
- SMALLER CCV-H SIZES [FROM CCV2H TO CCV6H] HAVE COPPER VALVE BODIES WHILE BIGGER CCV-H SIZES HAVE STAINLESS STEEL VALVE BODIES (WITH COPPER JOINTS, NO WELDING PROTECTION IS REQUIRED)
- BUILT-IN MECHANICAL FILTER (STRAINER)
- LOW PRESSURE DROPS DURING OPERATION.
- CERTIFIED ACCORDING PED CAT.II BY TUV RHEINLAND

### GENERAL SPECIFICATIONS

- Applicable for all common HCFC and HFC refrigerants such as: R22, R134a, R404A, R410A, R507A, R448A, R449A, R450A, R452A, R513A, R32, R1234ze(E), R1233zd(E), R454A/B/C, R455A, R290, R1270, R600a
- Medium temperature TS min./max.: -40°C / +150°C
- Max. operating pressure PS: 4,9 MPa (49 bar)
- Installation position:
  - Flow direction corresponds to the arrow
  - CCV can be installed in any position and direction in the system
- Declaration according to PED

# CHECK VALVE MAGNETIC TYPE

## GENERAL CHARACTERISTICS

| Model | Part Number | Connections Ø d ODF | | Kv | Min. OPD | Dimensions | | Weight | Layout / Drawing(1) | PED Category [Fluid Group 1] | PED Category [Fluid Group 2] |
|---|---|---|---|---|---|---|---|---|---|---|---|
| | | | | | | Ø C | B | | | | |
| | | [inch] | [mm] | [m³/h] | [bar] | [mm] | [mm] | [kg] | [-] | | |
| CCV2H05 | 10163002302 | 1/4 | - | 0,8 | 0,1 | 21,8 | 101,6 | 0,069 | A | Art. 4.3 | Art. 4.3 |
| CCV3H06 | CCVX0000802 | 3/8 | - | 1,2 | 0,1 | 21,8 | 101,6 | 0,070 | A | Art. 4.3 | Art. 4.3 |
| CCV4H05 | CCVX0000602 | 1/2 | - | 2,7 | 0,1 | 28,0 | 127,0 | 0,124 | A | Cat.II | Art. 4.3 |
| CCV5H06 | CCVX0000902 | 5/8 | 16 | 2,9 | 0,1 | 28,0 | 127,0 | 0,130 | A | Cat.II | Art. 4.3 |
| CCV6H05 | CCVX0001702 | 3/4 | - | 2,9 | 0,1 | 28,0 | 127,0 | 0,134 | A | Cat.II | Cat.I |
| CCV7H01 | 10163001302 | 7/8 | 22 | 6,5 | 0,1 | 35,5 | 178,0 | 0,177 | B | Cat.II | Cat.I |
| CCV9H01 | 10163000502 | 1 1/8 | - | 11,4 | 0,1 | 45,0 | 212,0 | 0,306 | B | Cat.II | Cat.I |
| CCV11H01 | 10163001202 | 1 3/8 | 35 | 16,2 | 0,1 | 56,0 | 239,0 | 0,504 | B | Cat.II | Cat.I |
| CCV13H01 | 10163002902 | 1 5/8 | - | 24,0 | 0,1 | 63,0 | 250,0 | 0,627 | B | Cat.II | Cat.I |
| CCV17H01 | 10163003002 | 2 1/8 | 54 | 42,8 | 0,1 | 78,0 | 300,0 | 1,183 | B | Cat.II | Cat.I |

**Note:** 1. Drawing "A" is referred to CCV-H models with copper valve bodies.
Drawing "B" is referred to CCV-H models with stainless-steel valve bodies.

## DIMENSIONAL DRAWING

### *"A": CCV-H Copper type*

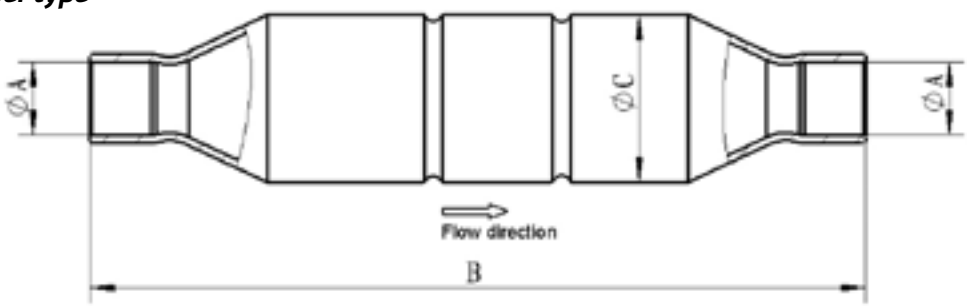


### *"B": CCV-H Stainless-Steel type*

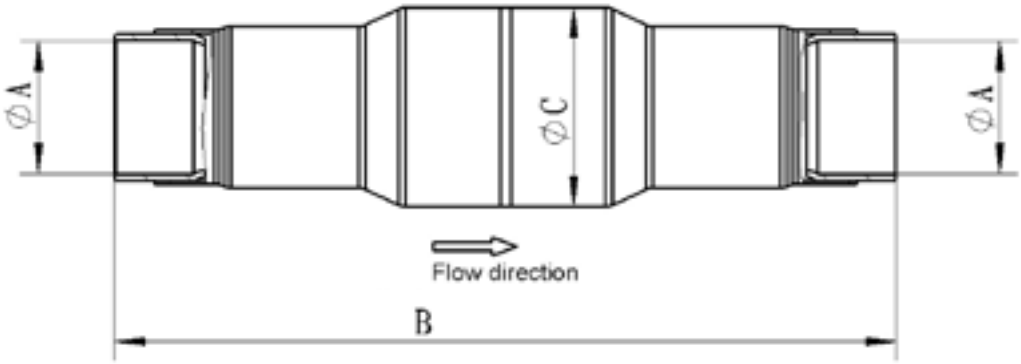

***BCV*** *SERIES*

# $CO_2$ CHECK VALVE

BCV series of check valves are designed for installation in transcritical $CO_2$ refrigeration system and HPWH systems. They are used to ensure correct flow direction of refrigerant so as to prevent backflow.

## FEATURES

- THIS VALVE PERMITS UNI-DIRECTIONAL FLOW ONLY.
- STAINLESS STEEL VALVE BODY FOR HIGHER STRENGTH, WHICH CAN WITHSTAND PRESSURE OF MAX. 140BAR MOP.
- FURNACE WELDING AND LASER WELDING FOR EXCELLENT WELDING QUALITY, WHICH ENSURES IDEAL AIR TIGHTNESS IN HIGH PRESSURE SYSTEM.
- COPPER CONNECTION TUBE OR BI-METAL CONNECTION TUBE WITH INNER EXTENDED COPPER TUBE FOR EASY SOLDER.

### GENERAL SPECIFICATION

- Applicable for R744 ($CO_2$)
- Medium temperature TS min./max.: -50°C /150°C
- Max. operating pressure PS: 140bar[1)]

  **Note:** BCV08-005 is a special check valve model developed for sub-critical application (PS=90bar) with soft sealing technology to minimize the internal leakage rate
- Installation position:
  -Flow direction corresponds to the arrow
- Declaration according to CE/PED

# $CO_2$ CHECK VALVE

## GENERAL CHARACTERISTICS

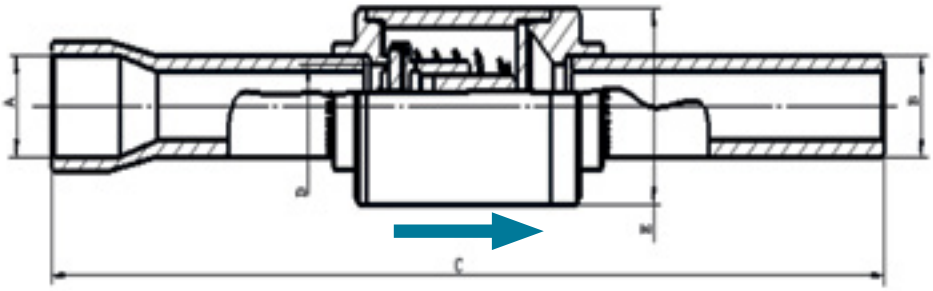

| Model | Part number | Connection Tube Material | Type | Connection | | Kv | Min.OPD | Dimension | | |
|---|---|---|---|---|---|---|---|---|---|---|
| | | | | ØA ODF | ØB ODM | | | D | C | E |
| | | | | [inch] | [inch] | [m³/h] | [kPa] | [mm] | [mm] | [mm] |
| BCV08-005* | 10160059702 | Copper | Straight-way | 3/8 | 3/8 | 0.9 | 40 | 8 | 110.6 | 18.5 |
| BCV08-001 | 10160046702 | Copper | Straight-way | 3/8 | 3/8 | 0.9 | 40 | 8 | 110.6 | 18.5 |

***Note:** please note the general specification about the difference of this model.

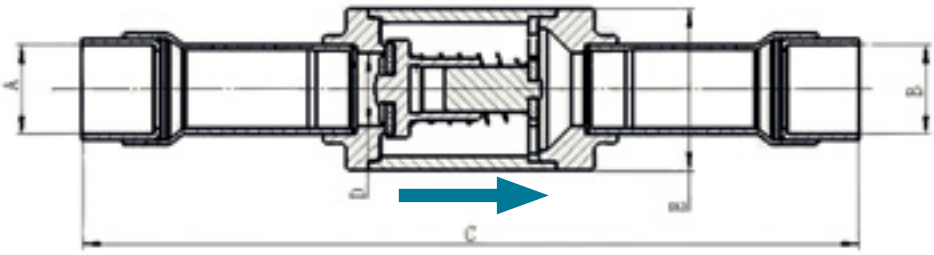

| Model | Part number | Connection Tube Material | Type | Connection | | Kv | Min.OPD | Dimension | | |
|---|---|---|---|---|---|---|---|---|---|---|
| | | | | ØA ODF | ØB ODF | | | D | C | E |
| | | | | [inch] | [inch] | [m³/h] | [kPa] | [mm] | [mm] | [mm] |
| BCV13-002 | 10160058802 | Copper+ Stainless Steel | Straight-way | 1/2 | 1/2 | 2.9 | 5 | 13 | 127.6 | 29 |
| BCV13-001 | 10160058902 | Copper+ Stainless Steel | Straight-way | 5/8 | 5/8 | 3.3 | 5 | 13 | 140 | 29 |
| BCV17-001 | 10160060802 | Copper+ Stainless Steel | Straight-way | 7/8 | 7/8 | 5.1 | 5 | 17 | 178.4 | 34 |

***SYJ*** *SERIES*

# SIGHT GLASS

(**Standard range:** for fluids GROUP 1&2 according to Directive 2014/68/EU or GROUP A1, A2/A2L, A3 according to ANSI-ASHRAE 34-2016)

Sight glasses are installed after the filter drier in liquid line of refrigerating systems, in order to observe property changes of the refrigerant (liquid/vapor) and to indicate the moisture level by colors.

## FEATURES

- HIGH PRECISION COLOR INDICATOR
- SOLID AND CORROSION RESISTANT BRASS MATERIAL
- GOOD READABILITY DUE TO HIGH CLEAR SIGHT GLASS OF WIDE ANGLE
- SEALING OF LOW CREEP PTFE TO ENSURE LEAKAGE FREE PERFORMANCE
- NEW: OPTIMIZED SIZE OF BRASS BODY, REDUCED WEIGHT
- NEW: INCREASED MWP 52 BARS
- NEW: MODEL SYJ28 (11/8 SOLDER) ADDED

### GENERAL SPECIFICATION

- Applicable for all common HCFC, HFC, HFO, HC refrigerants (and $CO_2$) such as: R22, R134a, R404A, R410A, R507A, R407C, R407A/F/H, R448A/R449A, R452A, R450A, R513A, R1234ze(E), R1234yf, R32, R452B, R454B/C, R290, R744
- Ambient temperature min./max.: -50°C / +80°C
- Medium temperature TS min./max.: -50°C / +80°C
- Environmental transport/storage temperature and humidity: -40°C/+65°C; air humidity: RH≤95%.
- Max. operating pressure PS: 5.2 MPa (52 bar)
- Installation position:
  - Liquid and suction line
  - Preferably in vertical lines, recommended position for horizontal lines are upwards without inclination in any direction
- Declaration according to PED (all products are covered by Art.4.3 PED Directive 2014/68/EU); UL – in process

# SIGHT GLASS

## *Version with Solder Connections*

| General Characteristics | | | | | | | | | | |
|---|---|---|---|---|---|---|---|---|---|---|
| Model Series | Model Name | Part Number (multi package)[1] | Connection Type | Connecting ODF Ød [inch] | Connecting ODF Ød [mm] | Dimensions & Weight L [mm] | H [mm] | H1 [mm] | Weight [g] | Drawing |
| SYJ6 | SYJ06H52 | SYJX0000402 | ODF x ODF solder | - | 6 | 101 | 21,5 | 14,5 | 65 | A |
| SYJ6 | SYJ06H51 | 10285016702 | | 1/4 | - | 101 | 21,5 | 14,5 | 65 | |
| SYJ10 | SYJ10H51 | 10285016802 | | 3/8 | - | 119 | 21,5 | 14,5 | 70 | |
| SYJ10 | SYJ10H52 | SYJX0000202 | | - | 10 | 119 | 21,5 | 14,5 | 70 | |
| SYJ12 | SYJ12H51 | 10285017202 | | 1/2 | - | 146 | 28 | 18,25 | 100 | |
| SYJ12 | SYJ12H52 | SYJX0000302 | | - | 12 | 146 | 28 | 18,25 | 100 | |
| SYJ16 | SYJ16H51 | 10285016902 | | 5/8 | 16 | 146 | 28 | 18,25 | 115 | |
| SYJ19 | SYJ19H51 | 10285017002 | | 3/4 | - | 173 | 35 | 21,5 | 180 | |
| SYJ22 | SYJ22H51 | 10285017102 | | 7/8 | 22 | 173 | 35 | 21,5 | 200 | |
| SYJ28 | SYJ28H51 | SYJX0000502 | | 1 1/8 | | 173 | 35 | 21,5 | 200 | |

**Note:** 1) Available also as industrial package. Contact Sanhua for more details.

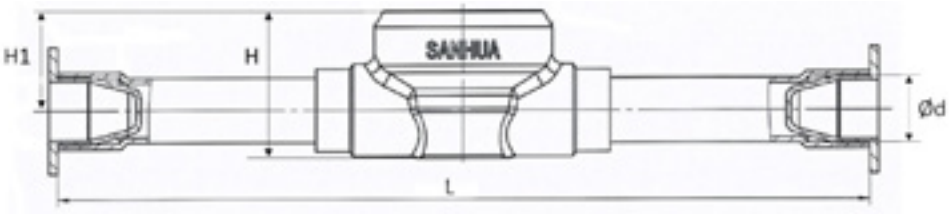


"Drawing A"

## *Version with male/male Flare Connections*

| General Characteristics | | | | | | | | | | | |
|---|---|---|---|---|---|---|---|---|---|---|---|
| Model Series | Model Name | Part Number (multi package)[1] | Connection Type | SAE Flare Ød [inch] | Dimensions & Weight L [mm] | H [mm] | H1 [mm] | D [mm] | B [mm] | Weight [g] | Drawing |
| SYJ6 | SYJ06L51 | SYJX0001602 | Flare M x M | 1/4 | 67 | 21,5 | 14,5 | 26 | 13 | 78 | B |
| SYJ10 | SYJ10L51 | SYJX0000802 | | 3/8 | 82 | 27 | 18 | 26 | 15,85 | 135 | |
| SYJ12 | SYJ12L51 | SYJX0001002 | | 1/2 | 88 | 27 | 18 | 26 | 15,85 | 145 | |
| SYJ16 | SYJ16L51 | SYJX0001202 | | 5/8 | 104 | 31 | 19 | 26 | 21,85 | 240 | |
| SYJ19 | SYJ19L51 | SYJX0001502 | | 3/4 | 110 | 31 | 19 | 26 | 21,85 | 270 | |

**Note:** 1) Available also as industrial package. Contact Sanhua for more details.

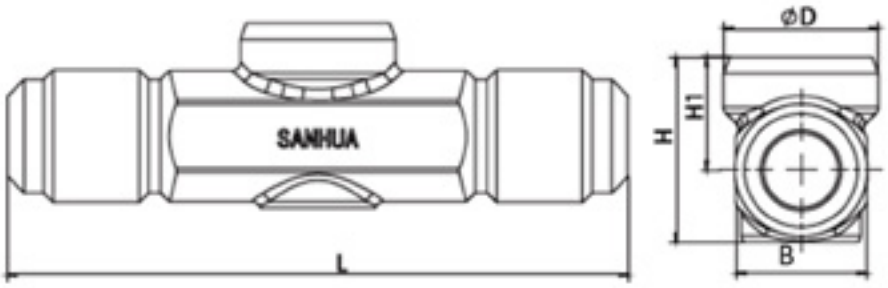


"Drawing B"

# SIGHT GLASS

*Version with male/female Flare connections*

| General Characteristics | | | | | | | | | | | | | |
|---|---|---|---|---|---|---|---|---|---|---|---|---|---|
| Model Series | Model Name | Part Number (multi package)[1] | Connection Type | SAE Flare | Dimensions & Weight | | | | | | | | |
| | | | | Ød | L | L1 | H | H1 | φD | B | Weight | Drawing |
| | | | | [inch] | [mm] | [mm] | [mm] | [mm] | [mm] | [mm] | [g] | |
| SYJ6 | SYJ06L61 | SYJX0000702 | Flare F x M | 1/4 | 58 | 46 | 27 | 18 | 26 | 15,85 | 95 | C |
| SYJ10 | SYJ10L61 | SYJX0000902 | | 3/8 | 71 | 57 | 31 | 19 | 26 | 21,85 | 175 | |
| SYJ12 | SYJ12L61 | SYJX0001102 | | 1/2 | 76 | 59 | 33 | 20 | 26 | 23,85 | 195 | |
| SYJ16 | SYJ16L61 | SYJX0001302 | | 5/8 | 92 | 72 | 33 | 20 | 26 | 23,85 | 245 | D |
| SYJ19 | SYJ19L61 | SYJX0001402 | | 3/4 | 98 | 76 | 33 | 20 | 26 | 23,85 | 260 | |

**Note:** 1) Available also as industrial package. Contact Sanhua for more details.

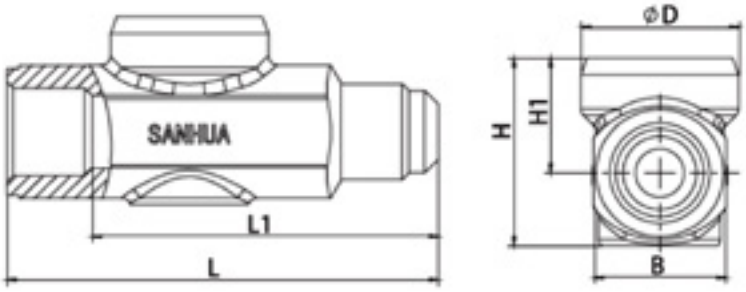


"Drawing C"

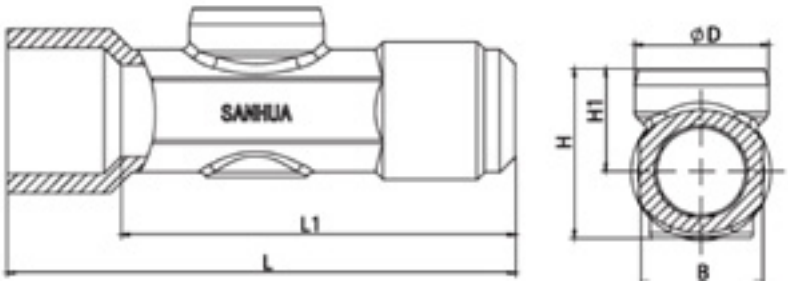


"Drawing D"

*Moisture Indication Limits*

| Refrigerant | Moisture Content 25°C: PPM | | |
|---|---|---|---|
| | Green/Dry | Middle Color | Yellow/Wet |
| R22 | <80 | 80~200 | >200 |
| R134a | <90 | 90~160 | >160 |
| R404A | <40 | 40~140 | >140 |
| R410A | <100 | 100~300 | >300 |
| R507A | <15 | 15~90 | >90 |
| R407C | <50 | 50~200 | >200 |
| R407H | <80 | 80~240 | >240 |
| R407A | <60 | 60~200 | >200 |
| R448A | <50 | 50~230 | >230 |
| R449A | <40 | 40~220 | >220 |
| R452A[1] | <50 | 50~120 | >120 |
| R450A[1] | <45 | 45~260 | >260 |
| R513A | <60 | 60~120 | >120 |

**Note:** 1) Calculated data based on refrigerant properties

# SIGHT GLASS

| Refrigerant | Moisture Content 40°C: PPM | | |
|---|---|---|---|
| | Green/Dry | Middle Color | Yellow/Wet |
| R22 | <120 | 120~280 | >280 |
| R134a | <180 | 180~300 | >300 |
| R404A | <80 | 80~160 | >160 |
| R410A | <150 | 150~540 | >540 |
| R507A | <80 | 80~170 | >170 |
| R407C | <100 | 100~260 | >260 |
| R407H | <120 | 120~400 | >400 |
| R407A | <80 | 80~380 | >380 |
| R448A | < 90 | 90~340 | >340 |
| R449A | <70 | 70~310 | >310 |
| R452A[1)] | <90 | 90~170 | >170 |
| R450A[1)] | <110 | 110~420 | >420 |
| R513A | <80 | 80~200 | >200 |

**Note:** 1) Calculated data based on refrigerant properties

| Refrigerant | Moisture Content 25°C: PPM | | |
|---|---|---|---|
| | Green/Dry | Middle Color | Yellow/Wet |
| R290 | <120 | 120~220 | >220 |
| R1234ze(E) | <60 | 60~180 | >180 |
| R1234yf | <60 | 60~160 | >160 |
| R32 | <120 | 120~380 | >380 |
| R452B[1)] | <95 | 95~290 | >290 |
| R454B[1)] | <115 | 115~290 | >290 |
| R454C[1)] | <75 | 75~160 | >160 |

| Refrigerant | Moisture Content 40°C: PPM | | |
|---|---|---|---|
| | Green/Dry | Middle Color | Yellow/Wet |
| R290 | <200 | 200~320 | >320 |
| R1234ze(E) | <80 | 80~220 | >220 |
| R1234yf | <80 | 80~280 | >280 |
| R32 | <200 | 200~580 | >580 |
| R452B[1)] | <210 | 210~330 | >330 |
| R454B[1)] | <150 | 150~340 | >340 |
| R454C[1)] | <85 | 85~240 | >240 |

**Note:** 1) Calculated data based on refrigerant properties

***SSV*** *SERIES*

# BRASS SERVICE VALVE

Brass service valves of series SSV are applicable for split air conditioners to connect indoor unit and outdoor unit. It can also be used in other cooling or refrigeration systems. The inner path of the valve can be closed by operating the valve stem. The 3way version (with charge port) can be used as service valve for vacuum pumping and refrigerant injection.

## FEATURES

- AVAILABLE WITHOUT AND WITH CHARGE PORT
- COST EFFICIENT SOLUTION
- RELIABLE AND ROBUST DESIGN

### GENERAL SPECIFICATIONS

- Applicable for all common HFC and HFO refrigerants[1)] such as: R134a, R404A, R407C, R410A, R507A, R407A, R407F, R448A, R449A, R452A, R450A, R513A, R290, R1234ze(E), R1234yf, R32, R452B, R454B, R454C
- Ambient temperature min./max.: -30°C / +55°C
- Medium temperature TS min./max.: -30 °C / +120°C
- Max. operating pressure PS: 4,9 MPa (49 bar)
- Installation position: Preferably liquid and suction line
- Certifications: PED declaration

**Note:** 1) For cooling capacities please refer to Sanhua selection tool

### GENERAL CHARACTERISTICS

| Model | Part Number[1)] | Connections | | | | Cooling capacity | PED Category |
|---|---|---|---|---|---|---|---|
| | | ØA Flare | Ød ODF | ØI Pipe | Charge Port Flare (SAE) | | |
| | | [ inch ] | [inch] | [mm] | [ inch ] | [ kW ] | |
| SSV-A2GSHC-23 | 10165068702 | 7/16-20UNF | 1/4 | 4,8 | - | 0,7 - 1,5 | 4.3 |
| SSV-JA3GSHC-20 | 10165068602 | 5/8-18UNF | 3/8 | 7 | 5/16 | 0,7 - 3,7 | 4.3 |
| SSV-JA4GSHC-19 | 10165070602 | 3/4-16UNF | 1/2 | 10 | 5/16 | 1,1 - 7,5 | 4.3 |
| SSV-JA5GSHC-15 | 10165068802 | 7/8-14UNF | 5/8 | 12,5 | 5/16 | 1,5 - 8,8 | 4.3 |
| SSV-JA6GSHC-13 | 10165070302 | 1 1/16-14UNS | 3/4 | 16 | 5/16 | 3,7 - 5,9 | 4.3 |
| SSV-JA3GSHC-44 | 10165366802 | 5/8-18UNF | 3/8 | 7 | 1/4 | 0,7 - 3,7 | 4.3 |
| SSV-JA4GSHC-44 | 10165366902 | 3/4-16UNF | 1/2 | 10 | 1/4 | 1,1 - 7,5 | 4.3 |
| SSV-JA5GSHC-32 | 10165367002 | 7/8-14UNF | 5/8 | 12,5 | 1/4 | 1,5 - 8,8 | 4.3 |
| SSV-JA6GSHC-25 | 10165375502 | 1 1/16-14UNS | 3/4 | 16 | 1/4 | 3,7 - 5,9 | 4.3 |

**Note:** 1) Extent of delivery:
- SSV-JA valve body with schrader valve, cap charge port, cap shut-off valve, nut pipe connection
- SSV-A valve body, cap shut-off valve, nut pipe connection, without charge port

# BRASS SERVICE VALVE

## DIMENSIONS

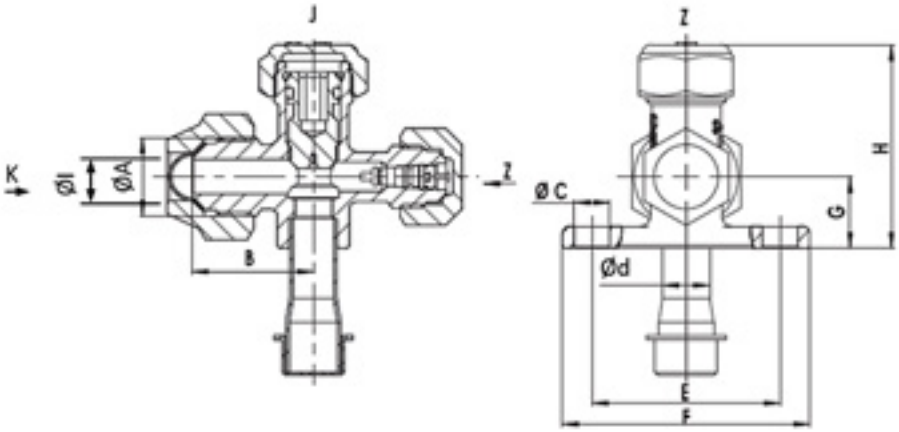


| Model | Part Number | Dimensions [ mm ] | | | | | | Wrench Size [mm] | | | |
|---|---|---|---|---|---|---|---|---|---|---|---|
| | | B | ØC | E | F | G | H | Nut Pipe Connection K | Cap Shut-off Valve J | Valve[1] Steam J | Cap Charge Port Z |
| SSV-A2GSHC-23 | 10165068702 | 23,5 | 7,2 | 38 | 50 | 14 | 36 | 17 | 19 | 5 | - |
| SSV-JA3GSHC-20 | 10165068602 | 25 | 7,2 | 38 | 50 | 14 | 41 | 22 | 19 | 5 | 17 |
| SSV-JA4GSHC-19 | 10165070602 | 32 | 7,2 | 38 | 50 | 16 | 44 | 24 | 22 | 5 | 17 |
| SSV-JA5GSHC-15 | 10165068802 | 35 | 7,2 | 38 | 54 | 18 | 50 | 27 | 26 | 5 | 17 |
| SSV-JA6-GSHC-13 | 10165070302 | 48,5 | 8 | 44 | 60 | 25 | 64 | 32 | 30 | 5 | 17 |
| SSV-JA3GSHC-44 | 10165366802 | 25 | 7,2 | 38 | 50 | 14 | 41 | 22 | 19 | 5 | 14 |
| SSV-JA4GSHC-44 | 10165366902 | 32 | 7,2 | 38 | 50 | 16 | 44 | 24 | 22 | 5 | 14 |
| SSV-JA5GSHC-32 | 10165367002 | 35 | 7,2 | 38 | 54 | 18 | 50 | 27 | 26 | 5 | 14 |
| SSV-JA6GSHC-25 | 10165375502 | 48,5 | 8 | 44 | 60 | 25 | 64 | 32 | 30 | 5 | 14 |

**Note:** 1) Allen screw

***CSV*** *SERIES*

# SERVICE VALVES

Brass service valves of CSV series are applicable for R744 systems. The inner path of the valve can be closed by operating the valve stem. The units can be used as service valve for vacuum pumping and refrigerant injection.

## FEATURES

- COST EFFICIENT SOLUTION
- RELIABLE AND ROBUST DESIGN
- EASY OPERATION

### GENERAL SPECIFICATIONS

- Applicable for R744
- Max. operating pressure PS:12MPa (120 bar)
- Ambient temperature min./max.: -30°C / +60°C
- Medium temperature TS min./max.: -45 °C / +125°C
- Installation position: Preferably liquid and suction line
- Certifications: PED declaration (all the models are in Art.4.3 according to PED Directive 2014/68/EU)

### GENERAL CHARACTERISTICS

| Model | Part Number[1)] | Connections | | | | Kv |
|---|---|---|---|---|---|---|
| | | Port "A"[2)] | | Port "B"[3)] | | |
| | | Type | Size [inch] | Type | Size [inch] | [m³/h] |
| CSV-Z22ST-11 | 10165413301 | Ordinary metric thread | M16 x 1.5 | Solder - ODF | 1/4" | - |
| CSV-Z22ST-13 | 10165413401 | Solder - ODF | 1/4" | Solder - ODF | 1/4" | 0.33 |
| CSV-Z33ST-10 | 10165413201 | Solder - ODF | 3/8" | Solder - ODF | 3/8" | 0.95 |
| CSV-Z44ST-9 | 10165413101 | Solder - ODF | 1/2" | Solder - ODF | 1/2" | 1.40 |
| CSV-A2GCR-4 | 10165521801 | Flare | 7/16-20UNF | Solder - ODF | 1/4" | 0.30 |
| CSV-A2GCR-5 | 10165531602 | Solder - ODF | 1/4" | Solder - ODF | 1/4" | 0.30 |

**Note:** 1) Extent of delivery: valve body with charge port & pipe connection(s), dust cap for shut-off port, caps for charge port and pipe connection

2) Port "A" for model CSV-Z22ST-11 is charge connection (Fig.1)

3) Port "B" for model CSV-Z22ST-11 is the connection to system (Fig.1)

# SERVICE VALVES

## DIMENSIONS

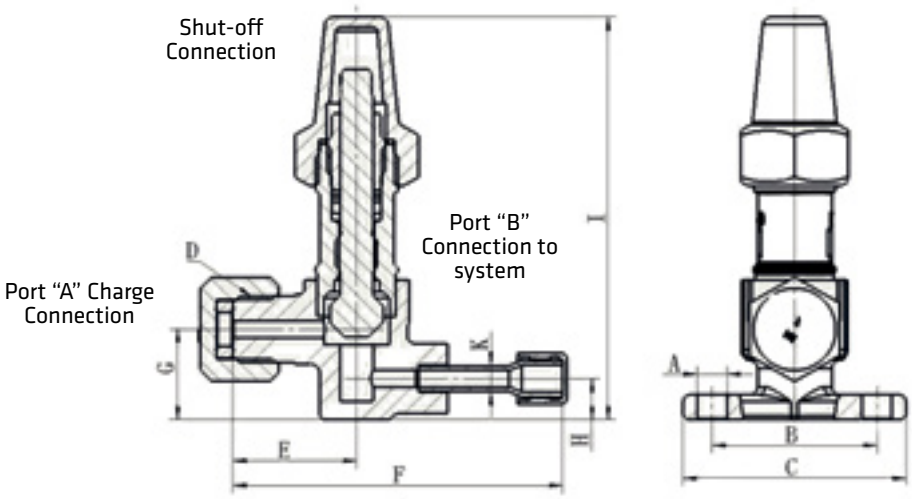


Fig.1 Model: CSV-Z22ST-11

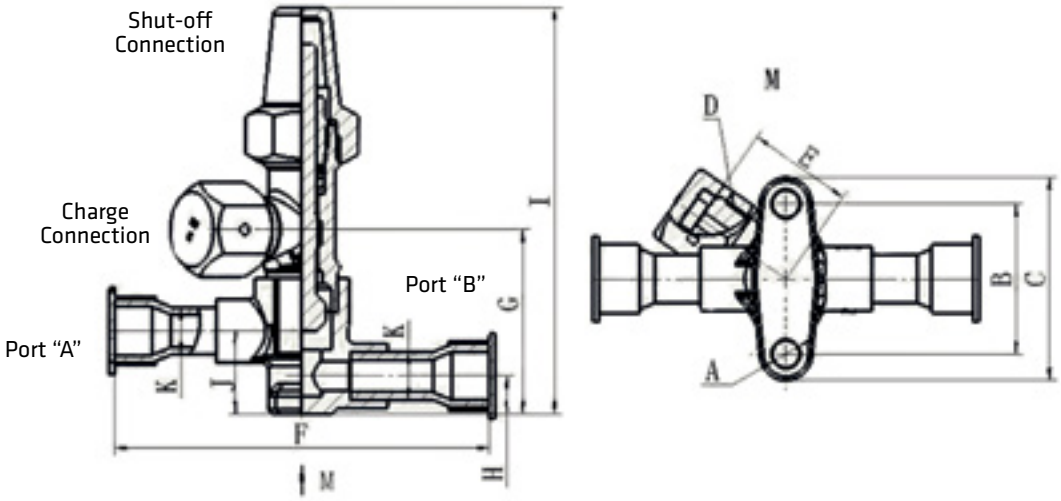


Fig.2 Models: CSV-Z22ST-13, CSV-Z33ST-10 & CSV-Z44ST-9

# SERVICE VALVES

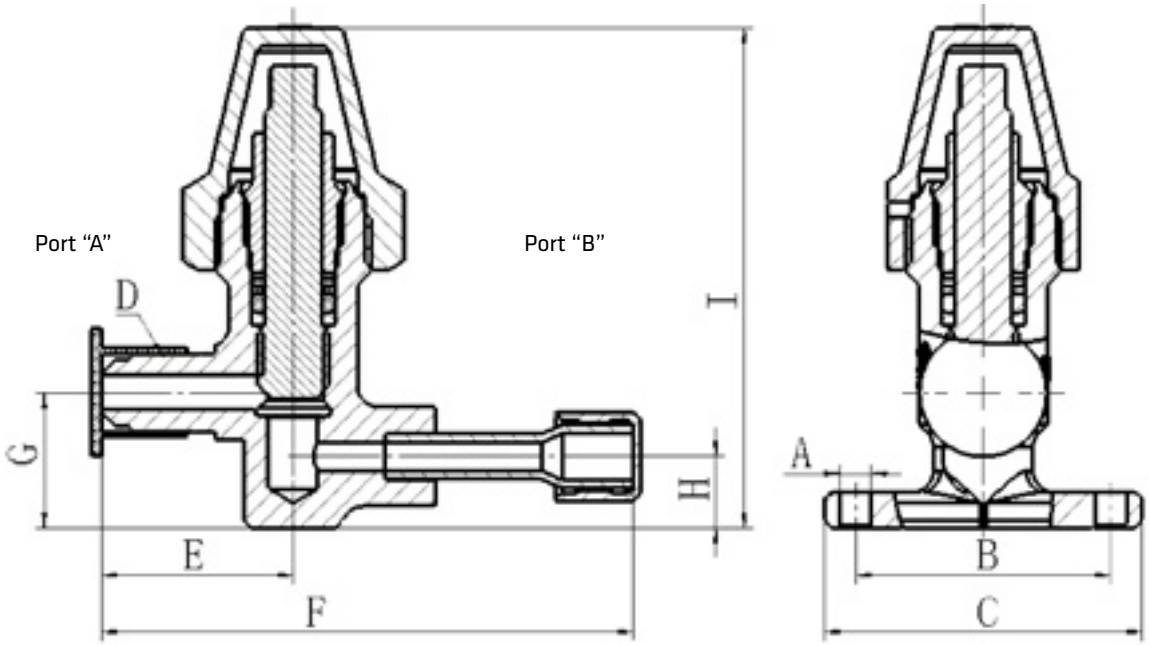


Fig.3 Model: CSV-A2GCR-4

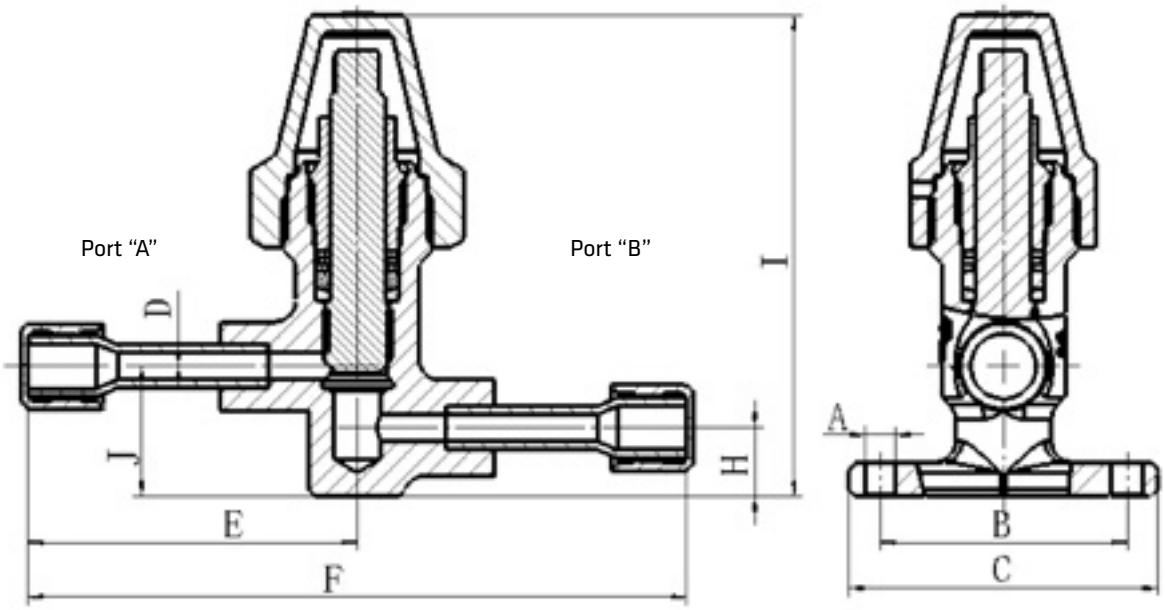


Fig.3 Model: CSV-A2GCR-5

# SERVICE VALVES

| Model | Charge Connection | | Shut-off Connection | | | Dimensions [mm] | | | | | | | |
|---|---|---|---|---|---|---|---|---|---|---|---|---|---|
| | Size [inch] | Cap wrench Size | Size [inch] | Cap wrench Size | Stem Size Ø [mm] | ØA | B | C | E | F | H | I | J |
| CSV-Z22ST-11 | M16 | H22 | M20 | H26 | 6.35 | 7.2 | 40 | 50 | 28 | 80 | 10 | 98 | - |
| CSV-Z22ST-13 | M16 | H22 | M21 | H26 | 6.35 | 7.2 | 40 | 50 | 28 | 100 | 10 | 108 | 22 |
| CSV-Z33ST-10 | M16 | H22 | M22 | H26 | 6.35 | 7.2 | 40 | 50 | 28 | 100 | 10 | 108 | 22 |
| CSV-Z44ST-9 | M16 | H22 | M23 | H26 | 6.35 | 7.2 | 40 | 50 | 28 | 100 | 10 | 108 | 22 |
| CSV-A2GCR-4 | - | - | M20 | H27 | 6.35 | 4.5 | 36 | 45 | 27 | 75 | 10 | 70.5 | 19 |
| CSV-A2GCR-5 | - | - | M20 | H27 | 6.35 | 4.5 | 36 | 45 | 48 | 96 | 10 | 70.5 | 19 |

*TCJ SERIES*

# CHARGE VALVE

Charge valves are mainly installed in air conditioning and refrigeration systems. They are used as service valve for circuit evacuation to vacuum and for refrigerant injection.

## FEATURES

- SIMPLE STRUCTURE, CONVENIENT TO USE
- PREVENT REFRIGERANT LOSS THROUGH INTEGRATED SHRADER VALVE

### GENERAL SPECIFICATION

- Applicable for all common HCFC and HFC refrigerants such as: R22, R134a, R404A, R407C, R410A, R507A ...
- Ambient temperature min./max.: -30/+55°C
- Medium temperature TS min./max.: -30°C / +80°C
- Max. operating pressure PS: 4,5 MPa (45 bar)
- Installation position: liquid or suction line
- Declaration according to PED

### DIMENSIONS

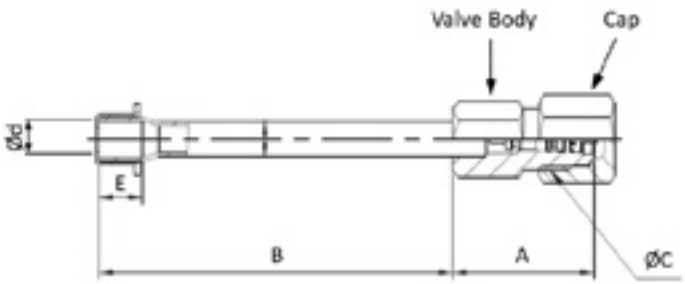


| Model | Part Number* 1) | Connections | | | Dimensions | | | Wrench Size | | Refrigerant |
|---|---|---|---|---|---|---|---|---|---|---|
| | | Solder ODF Ød | | Flare UNF ØC | A | B | E | Valve Body | Cap | |
| | | [mm] | [inch] | [inch] | [mm] | | | [mm] | | [mm] |
| TCJ-2HMSZ-1 | 10155004802 | 6,35 | 1/4 | 7/16-20 | 26 | 65 | 8 | 12 | 14 | R22 |
| TCJ-2GMS-1 | 10155001502 | 6,35 | 1/4 | 1/2-20 | 26 | 65 | 8 | 14 | 17 | R134a/R404A/R407C R410A/R507 |

**Note:** * Available also as industrial package. Contact Sanhua for more details.
1) Extent of delivery: valve body, schrader valve and cap

# CHARGE VALVE

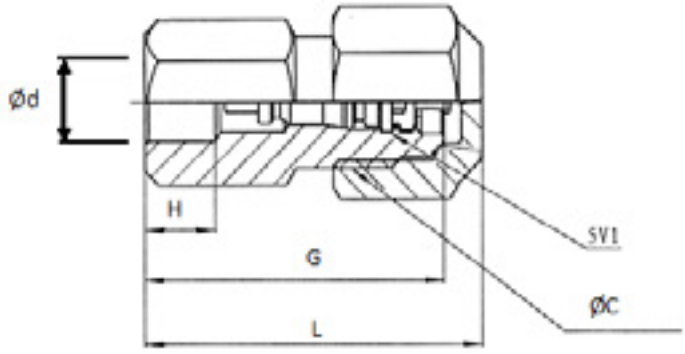


| Model | Part Number* 1) | Connections | | | Dimensions | | | Wrench Size | | Refrigerant |
|---|---|---|---|---|---|---|---|---|---|---|
| | | Solder ODF Ød | | Flare UNF ØC | L | G | H | Valve Body | Cap | |
| | | [mm] | [inch] | [inch] | [mm] | | | [mm] | | [mm] |
| TCJ-2HLEN-1 | 10155010302 | 6,35 | 1/4 | 7/16-20 | 29 | 26 | 6 | 12 | 14 | R22 |
| TCJ-2GLEN-2 | 10155009202 | 6,35 | 1/4 | 1/2-20 | 29 | 26 | 6 | 14 | 17 | R134a/R404A/R407C R410A/R507 |

**Note:** * Available also as industrial package. Contact Sanhua for more details.
1) Extent of delivery: valve body, schrader valve and cap

***DTG*** *SERIES*

# UNI-FLOW FILTER DRIERS

**(GreenTech range:** for fluids GROUP 1 according to Directive 2014/68/EU or GROUP A3/A2L according to ANSI-ASHRAE 34-2016).

The filter driers of series DTG are used in refrigeration system with unidirectional flow to absorb moisture and acid in the system and to filter out the impurities.

## FEATURES

- HIGHLY EFFICIENT IN MOISTURE ABSORPTION, FILTERING IMPURITY, ACID, PAINT REMAINS AND MUD REMOVAL
- HYBRID DESICCANT
- DURABLE AND SOLID FILTER CORES
- FILTERING FINENESS: 20μM
- CORROSION RESISTANT PAINTING SURVIVES SALT SPRAY TEST OF 500 HOURS
- CONNECTION TYPE: SOLDER

### GENERAL SPECIFICATIONS

- Applicable for HC, HFC, HFO refrigerants such as:R290, R1234ze(E), R1234yf, R447A, R452B, R454B, R454C
- Ambient temperature min./max.: -30°C / +70°C
- Medium temperature TS min./max.: -30°C / +120°C
- Max. operating pressure PS max.: 4,83 MPa (48,3 bar) - 700 PSI
- Installation position:
  - Flow direction corresponds to the arrow
  - Preferably installed in liquid line
- Certifications: UL/CSA and PED declaration (all products have been covered by Art.4.3 PED Directive 2014/68/EU)

### TECNHICAL PARAMETERS *Desiccant Selection Table*

| | Medium Type | 80% 3Å desiccant and 20% active alumina | 100% 3Å desiccant |
|---|---|---|---|
| Refrigerant | HC | Applicable | Applicable |
| | HFC | Applicable | Applicable |
| | HFO | Applicable | Applicable |
| Oil[1)] | Mineral oil or AB | Applicable | Applicable |
| | Pure POE or PAG | Applicable | Applicable |
| | POE or PAG with additive | Not Applicable | Applicable |

**Note:** 1) When the systems use oil with additive, it is not recommended to use a core with alumina

# UNI-FLOW FILTER DRIERS

*Model Designation Legend*

| | | | |
|---|---|---|---|
| **1** | **Product Code** | **Filter Drier Series** | |
| | DTG | Indicates unidirectional filter drier | |
| **2** | **Filter Core** | **Structure and Material** | |
| | B | Solid core, 100%3Å desiccant | |
| | F | Solid core, 80% 3Å desiccant and 20% active alumina | |
| **3** | **Internal Volume** | **Expressed in [ inch³ ]** | **Expressed in [ cm³ ]** |
| | 03 | 3 | 49 |
| | 05 | 5 | 82 |
| | 08 | 8 | 131 |
| | 16 | 16 | 262 |
| | 30 | 30 | 492 |
| | 41 | 41 | 672 |
| | 75 | 75 | 1229 |
| **4** | **Connection Size** | **Pos. 5 shows "0": Solder [inch]** | |
| | 02 | 1/4 | |
| | 25 | 5/16 | |
| | 03 | 3/8 | |
| | 04 | 1/2 | |
| | 05 | 5/8 | |
| | 06 | 3/4 | |
| | 07 | 7/8 | |
| | 09 | 1 1/8 | |
| | **Connection Size** | **Pos. 5 shows "1": Solder [mm]** | |
| | 06 | 6 | |
| | (08) * | (5/16" version can be used e.g. DTG-B03 250) | |
| | 10 | 10 | |
| | 12 | 12 | |
| | (16) * | (5/8" version can be used e.g. DTG-B08 050) | |
| | (22) * | (7/8" version can be used e.g. DTG-B16 070) | |
| | 28 | 28 | |
| **5** | **Pipe Connection** | **Type** | |
| | 0 | Solder with inch connections | |
| | 1* | Solder with metric connections | |
| **6** | **Version Number** | **Description** | |
| | 901 | Standard product | |

**Note:** *Solder connections which fit to metric and inch are marked with inch product codes e.g. 8, 16 and 22 mm

# UNI-FLOW FILTER DRIERS

## MODEL DESIGNATION EXAMPLE

| Position Number | | | | | | According to Model Designation Legend |
|---|---|---|---|---|---|---|
| 1 | 2 | 3 | 4 | 5 | 6 | |
| **DTG** | B | 03 | 06 | 1 | 901 | Unidirectional filter drier |
| DTG | **B** | 03 | 06 | 1 | 901 | Solid filter core with 100% 3Å desiccant |
| DTG | B | **03** | 06 | 1 | 901 | 3 inch³ internal volume |
| DTG | B | 03 | **06** | 1 | 901 | When Pos. 5 is "1": connection size 6mm |
| DTG | B | 03 | 06 | **1** | 901 | Solder connection metric |
| DTG | B | 03 | 06 | 1 | **901** | Standard product |

# UNI-FLOW FILTER DRIERS

## GENERAL CHARACTERISTICS OF DTG-B FILTER - SOLDER CONNECTION

| Filter | Model[1] [inch] | Part Number (multi package)[2] [inch] | Model[1] [mm] | Part Number (multi package)[2] [mm] | Nominal Volumen | | Connection | | Dimensions & Weight[3] | | | | PED Category[4] (Fluid Group 1) |
|---|---|---|---|---|---|---|---|---|---|---|---|---|---|
| | | | | | | | Solder | | ØD | B | A | Weight | |
| | | | | | [inch³] | [cm³] | [inch] | [mm] | [mm] | [mm] | [mm] | [g] | |
| DTGB032s | DTG-B03 020-901 | 10230008302 | DTG-B03 061-901 | 10230008702 | 3 | 49 | 1/4 | 6 | 45 | 65 | 103 | 160 | Art. 4.3 |
| DTGB0325s | DTG-B03 250-901 | 10230008402 | DTG-B03 250-901 | 10230008402 | 3 | 49 | 5/16 | 8 | 45 | 65 | 103 | 160 | Art. 4.3 |
| DTGB033s | DTG-B03 030-901 | 10230008502 | DTG-B03 101-901 | 10230008802 | 3 | 49 | 3/8 | 10 | 45 | 65 | 103 | 160 | Art. 4.3 |
| DTGB034s | DTG-B03 040-901 | 10230008602 | DTG-B03 121-901 | 10230008902 | 3 | 49 | 1/2 | 12 | 45 | 65 | 113 | 160 | Art. 4.3 |
| DTGB052s | DTG-B05 020-901 | 10230010202 | DTG-B05 061-901 | 10230010802 | 5 | 82 | 1/4 | 6 | 69 | 76 | 114 | 450 | Art. 4.3 |
| DTGB0525s | DTG-B05 250-901 | 10230010402 | DTG-B05 250-901 | 10230010402 | 5 | 82 | 5/16 | 8 | 69 | 76 | 114 | 450 | Art. 4.3 |
| DTGB053s | DTG-B05 030-901 | 10230010502 | DTG-B05 101-901 | 10230010902 | 5 | 82 | 3/8 | 10 | 69 | 76 | 114 | 450 | Art. 4.3 |
| DTGB054s | DTG-B05 040-901 | 10230010602 | DTG-B05 121-901 | 10230011002 | 5 | 82 | 1/2 | 12 | 69 | 76 | 124 | 450 | Art. 4.3 |
| DTGB055s | DTG-B05 050-901 | 10230010702 | DTG-B05 050-901 | 10230010702 | 5 | 82 | 5/8 | 16 | 69 | 76 | 124 | 450 | Art. 4.3 |
| DTGB082s | DTG-B08 020-901 | 10230009502 | DTG-B08 061-901 | 10230011302 | 8 | 131 | 1/4 | 6 | 69 | 98 | 136 | 550 | Art. 4.3 |
| DTGB0825s | DTG-B08 250-901 | 10230009402 | DTG-B08 250-901 | 10230009402 | 8 | 131 | 5/16 | 8 | 69 | 98 | 136 | 550 | Art. 4.3 |
| DTGB083s | DTG-B08 030-901 | 10230009302 | DTG-B08 101-901 | 10230011402 | 8 | 131 | 3/8 | 10 | 69 | 98 | 136 | 550 | Art. 4.3 |
| DTGB084s | DTG-B08 040-901 | 10230009602 | DTG-B08 121-901 | 10230011602 | 8 | 131 | 1/2 | 12 | 69 | 98 | 146 | 550 | Art. 4.3 |
| DTGB085s | DTG-B08 050-901 | 10230009702 | DTG-B08 050-901 | 10230009702 | 8 | 131 | 5/8 | 16 | 69 | 98 | 146 | 550 | Art. 4.3 |
| DTGB162s | DTG-B16 020-901 | 10230012002 | DTG-B16 061-901 | 10230012702 | 16 | 262 | 1/4 | 6 | 69 | 118 | 156 | 660 | Art. 4.3 |
| DTGB1625s | DTG-B16 250-901 | 10230012102 | DTG-B16 250-901 | 10230012102 | 16 | 262 | 5/16 | 8 | 69 | 118 | 156 | 660 | Art. 4.3 |
| DTGB163s | DTG-B16 030-901 | 10230012202 | DTG-B16 101-901 | 10230012802 | 16 | 262 | 3/8 | 10 | 69 | 118 | 156 | 660 | Art. 4.3 |
| DTGB164s | DTG-B16 040-901 | 10230012302 | DTG-B16 121-901 | 10230015902 | 16 | 262 | 1/2 | 12 | 69 | 118 | 166 | 660 | Art. 4.3 |
| DTGB165s | DTG-B16 050-901 | 10230012402 | DTG-B16 050-901 | 10230012402 | 16 | 262 | 5/8 | 16 | 69 | 118 | 166 | 660 | Art. 4.3 |
| DTGB166s | DTG-B16 060-901 | 10230012502 | - | - | 16 | 262 | 3/4 | - | 69 | 118 | 178 | 660 | Art. 4.3 |
| DTGB167s | DTG-B16 070-901 | 10230012602 | DTG-B16 070-901 | 10230012602 | 16 | 262 | 7/8 | 22 | 69 | 118 | 178 | 660 | Art. 4.3 |
| DTGB303s | DTG-B30 030-901 | 10230013902 | DTG-B30 101-901 | 10230014502 | 30 | 492 | 3/8 | 10 | 81 | 193 | 231 | 1550 | Art. 4.3 |
| DTGB304s | DTG-B30 040-901 | 10230014002 | DTG-B30 121-901 | 10230014602 | 30 | 492 | 1/2 | 12 | 81 | 193 | 241 | 1550 | Art. 4.3 |
| DTGB305s | DTG-B30 050-901 | 10230014102 | DTG-B30 050-901 | 10230014102 | 30 | 492 | 5/8 | 16 | 81 | 193 | 241 | 1550 | Art. 4.3 |
| DTGB306s | DTG-B30 060-901 | 10230014202 | - | - | 30 | 492 | 3/4 | - | 81 | 193 | 253 | 1550 | Art. 4.3 |
| DTGB307s | DTG-B30 070-901 | 10230014302 | DTG-B30 070-901 | 10230014302 | 30 | 492 | 7/8 | 22 | 81 | 193 | 253 | 1550 | Art. 4.3 |
| DTGB309s | DTG-B30 090-901 | 10230014402 | DTG-B30 281-901 | 10230014802 | 30 | 492 | 1 1/8 | 28 | 81 | 193 | 263 | 1550 | Art. 4.3 |
| DTGB414s | DTG-B41 040-901 | 10230013202 | DTG-B41 121-901 | 10230013602 | 41 | 672 | 1/2 | 12 | 94 | 194 | 242 | 2050 | Art. 4.3 |
| DTGB415s | DTG-B41 050-901 | 10230013302 | DTG-B41 050-901 | 10230013302 | 41 | 672 | 5/8 | 16 | 94 | 194 | 242 | 2050 | Art. 4.3 |
| DTGB417s | DTG-B41 070-901 | 10230013402 | DTG-B41 070-901 | 10230013402 | 41 | 672 | 7/8 | 22 | 94 | 194 | 254 | 2050 | Art. 4.3 |
| DTGB419s | DTG-B41 090-901 | 10230013502 | DTG-B41 281-901 | 10230013802 | 41 | 672 | 1 1/8 | 28 | 94 | 194 | 264 | 2050 | Art. 4.3 |
| DTGB757s | DTG-B75 070-901 | 10230014902 | DTG-B75 070-901 | 10230014902 | 75 | 1229 | 7/8 | 22 | 94 | 333 | 393 | 3400 | Art. 4.3 |
| DTGB759s | DTG-B75 090-901 | 10230015002 | DTG-B75 281-901 | 10230015102 | 75 | 1229 | 1 1/8 | 28 | 94 | 333 | 403 | 3400 | Art. 4.3 |

**Note:**
1) Available also as industrial package. Contact Sanhua for more details.
2) Dimensions are rounded up to integral mm
3) PED Directive 2014/68/EU. Category evaluated considering product as a "vessel"

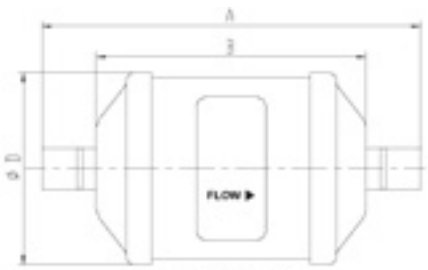


Solder Connection

# UNI-FLOW FILTER DRIERS

## GENERAL CHARACTERISTICS OF DTG-F FILTER - SOLDER CONNECTION

| Filter | Model[1] [inch] | Part Number (multi package)[2] [inch] | Model[1] [mm] | Part Number (multi package)[2] [mm] | Nominal Volumen | | Connection | | Dimensions & Weight[3] | | | | PED Category[4] (Fluid Group 1) |
|---|---|---|---|---|---|---|---|---|---|---|---|---|---|
| | | | | | | | Solder | | ØD | B | A | Weight | |
| | | | | | [inch³] | [cm³] | [inch] | [mm] | [mm] | [mm] | [mm] | [g] | |
| DTGF032s | DTG-F03 020-901 | 10230016102 | DTG-F03 061-901 | 10230016502 | 3 | 49 | 1/4 | 6 | 45 | 65 | 103 | 160 | Art. 4.3 |
| DTGF0325s | DTG-F03 250-901 | 10230016202 | DTG-F03 250-901 | 10230016202 | 3 | 49 | 5/16 | 8 | 45 | 65 | 103 | 160 | Art. 4.3 |
| DTGF033s | DTG-F03 030-901 | 10230016302 | DTG-F03 101-901 | 10230016602 | 3 | 49 | 3/8 | 10 | 45 | 65 | 103 | 160 | Art. 4.3 |
| DTGF034s | DTG-F03 040-901 | 10230016402 | DTG-F03 121-901 | 10230016002 | 3 | 49 | 1/2 | 12 | 45 | 65 | 113 | 160 | Art. 4.3 |
| DTGF052s | DTG-F05 020-901 | 10230017702 | DTG-F05 061-901 | 10230017202 | 5 | 82 | 1/4 | 6 | 69 | 76 | 114 | 450 | Art. 4.3 |
| DTGF0525s | DTG-F05 250-901 | 10230017602 | DTG-F05 250-901 | 10230017602 | 5 | 82 | 5/16 | 8 | 69 | 76 | 114 | 450 | Art. 4.3 |
| DTGF053s | DTG-F05 030-901 | 10230017502 | DTG-F05 101-901 | 10230017102 | 5 | 82 | 3/8 | 10 | 69 | 76 | 114 | 450 | Art. 4.3 |
| DTGF054s | DTG-F05 040-901 | 10230017402 | DTG-F05 121-901 | 10230017002 | 5 | 82 | 1/2 | 12 | 69 | 76 | 124 | 450 | Art. 4.3 |
| DTGF055s | DTG-F05 050-901 | 10230017302 | DTG-F05 050-901 | 10230017302 | 5 | 82 | 5/8 | 16 | 69 | 76 | 124 | 450 | Art. 4.3 |
| DTGF082s | DTG-F08 020-901 | 10230018102 | DTG-F08 061-901 | 10230018602 | 8 | 131 | 1/4 | 6 | 69 | 98 | 136 | 550 | Art. 4.3 |
| DTGF0825s | DTG-F08 250-901 | 10230018202 | DTG-F08 250-901 | 10230018202 | 8 | 131 | 5/16 | 8 | 69 | 98 | 136 | 550 | Art. 4.3 |
| DTGF083s | DTG-F08 030-901 | 10230018302 | DTG-F08 101-901 | 10230018702 | 8 | 131 | 3/8 | 10 | 69 | 98 | 136 | 550 | Art. 4.3 |
| DTGF084s | DTG-F08 040-901 | 10230018402 | DTG-F08 121-901 | 10230018802 | 8 | 131 | 1/2 | 12 | 69 | 98 | 146 | 550 | Art. 4.3 |
| DTGF085s | DTG-F08 050-901 | 10230018502 | DTG-F08 050-901 | 10230018502 | 8 | 131 | 5/8 | 16 | 69 | 98 | 146 | 550 | Art. 4.3 |
| DTGF162s | DTG-F16 020-901 | 10230019302 | DTG-F16 061-901 | 10230020002 | 16 | 262 | 1/4 | 6 | 69 | 118 | 156 | 660 | Art. 4.3 |
| DTGF1625s | DTG-F16 250-901 | 10230019402 | DTG-F16 250-901 | 10230019402 | 16 | 262 | 5/16 | 8 | 69 | 118 | 156 | 660 | Art. 4.3 |
| DTGF163s | DTG-F16 030-901 | 10230019502 | DTG-F16 101-901 | 10230020102 | 16 | 262 | 3/8 | 10 | 69 | 118 | 156 | 660 | Art. 4.3 |
| DTGF164s | DTG-F16 040-901 | 10230019602 | DTG-F16 121-901 | 10230020202 | 16 | 262 | 1/2 | 12 | 69 | 118 | 166 | 660 | Art. 4.3 |
| DTGF165s | DTG-F16 050-901 | 10230019702 | DTG-F16 050-901 | 10230019702 | 16 | 262 | 5/8 | 16 | 69 | 118 | 166 | 660 | Art. 4.3 |
| DTGF166s | DTG-F16 060-901 | 10230019802 | - | - | 16 | 262 | 3/4 | - | 69 | 118 | 178 | 660 | Art. 4.3 |
| DTGF167s | DTG-F16 070-901 | 10230019902 | DTG-F16 070-901 | 10230019902 | 16 | 262 | 7/8 | 22 | 69 | 118 | 178 | 660 | Art. 4.3 |
| DTGF303s | DTG-F30 030-901 | 10230020902 | DTG-F30 101-901 | 10230021502 | 30 | 492 | 3/8 | 10 | 81 | 193 | 231 | 1550 | Art. 4.3 |
| DTGF304s | DTG-F30 040-901 | 10230021002 | DTG-F30 121-901 | 10230021602 | 30 | 492 | 1/2 | 12 | 81 | 193 | 241 | 1550 | Art. 4.3 |
| DTGF305s | DTG-F30 050-901 | 10230021102 | DTG-F30 050-901 | 10230021102 | 30 | 492 | 5/8 | 16 | 81 | 193 | 241 | 1550 | Art. 4.3 |
| DTGF306s | DTG-F30 060-901 | 10230021202 | - | - | 30 | 492 | 3/4 | - | 81 | 193 | 253 | 1550 | Art. 4.3 |
| DTGF307s | DTG-F30 070-901 | 10230021302 | DTG-F30 070-901 | 10230021302 | 30 | 492 | 7/8 | 22 | 81 | 193 | 253 | 1550 | Art. 4.3 |
| DTGF309s | DTG-F30 090-901 | 10230021402 | DTG-F30 281-901 | 10230021802 | 30 | 492 | 1 1/8 | 28 | 81 | 193 | 263 | 1550 | Art. 4.3 |
| DTGF414s | DTG-F41 040-901 | 10230022402 | DTG-F41 121-901 | 10230022802 | 41 | 672 | 1/2 | 12 | 94 | 194 | 242 | 2050 | Art. 4.3 |
| DTGF415s | DTG-F41 050-901 | 10230022502 | DTG-F41 050-901 | 10230022502 | 41 | 672 | 5/8 | 16 | 94 | 194 | 242 | 2050 | Art. 4.3 |
| DTGF417s | DTG-F41 070-901 | 10230022602 | DTG-F41 070-901 | 10230022602 | 41 | 672 | 7/8 | 22 | 94 | 194 | 254 | 2050 | Art. 4.3 |
| DTGF419s | DTG-F41 090-901 | 10230022702 | DTG-F41 281-901 | 10230023002 | 41 | 672 | 1 1/8 | 28 | 94 | 194 | 264 | 2050 | Art. 4.3 |
| DTGF757s | DTG-F75 070-901 | 10230023102 | DTG-F75 070-901 | 10230023102 | 75 | 1229 | 7/8 | 22 | 94 | 333 | 393 | 3400 | Art. 4.3 |
| DTGF759s | DTG-F75 090-901 | 10230031102 | DTG-F75 281-901 | 10230023302 | 75 | 1229 | 1 1/8 | 28 | 94 | 333 | 403 | 3400 | Art. 4.3 |

**Note:**
1) Delivery time on request
2) Available also as industrial package. Contact Sanhua for more details
3) Dimensions are rounded up to integral mm
4) PED Directive 2014/68/EU. Category evaluated considering product as a "vessel"

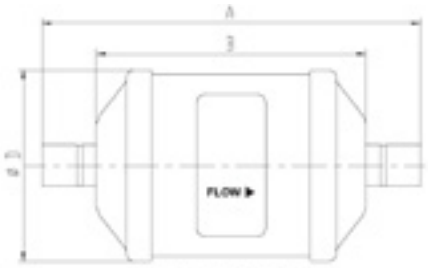


Solder Connection

# UNI-FLOW FILTER DRIERS

## SELECTION TABLE

| Model | Capacity[1) 2)] [kW] | | | |
|---|---|---|---|---|
| | R290 | R454B | R1234yf | R1234ze(E) |
| DTGB032s | 9.22 | 9,50 | 5.55 | 6.76 |
| DTGB0325s | 11.17 | 11,51 | 6.72 | 8.19 |
| DTGB033s | 14.53 | 14,98 | 8.75 | 10.65 |
| DTGB034s | 28.58 | 29,45 | 17.21 | 20.95 |
| DTGB052s | 10.44 | 10,75 | 6.28 | 7.65 |
| DTGB0525s | 11.12 | 11,56 | 6.75 | 8.22 |
| DTGB053s | 23.80 | 24,52 | 14.33 | 17.44 |
| DTGB054s | 29.36 | 30,25 | 17.67 | 21.52 |
| DTGB055s | 40.58 | 41,81 | 24.43 | 29.74 |
| DTGB082s | 10.88 | 11,21 | 6.55 | 7.97 |
| DTGB0825s | 12.49 | 12,86 | 7.52 | 9.15 |
| DTGB083s | 25.36 | 26,13 | 15.27 | 18.59 |
| DTGB084s | 30.19 | 31,11 | 18.17 | 22.13 |
| DTGB085s | 52.62 | 54,22 | 31.68 | 38.57 |
| DTGB162s | 12.92 | 13,32 | 7.78 | 9.47 |
| DTGB1625s | 12.49 | 12,86 | 7.52 | 9.15 |
| DTGB163s | 25.36 | 26,13 | 15.27 | 18.59 |
| DTGB164s | 32.92 | 33,92 | 19.82 | 24.13 |
| DTGB165s | 50.62 | 52,16 | 30.48 | 37.10 |
| DTGB166s | 54.57 | 56,23 | 32.85 | 40.00 |
| DTGB167s | 55.35 | 57,04 | 33.32 | 40.57 |
| DTGB303s | 30.19 | 31,11 | 18.17 | 22.13 |
| DTGB304s | 39.02 | 40,20 | 23.49 | 28.59 |
| DTGB305s | 53.40 | 55,03 | 32.15 | 39.14 |
| DTGB306s | 73.55 | 75,78 | 44.28 | 53.90 |
| DTGB307s | 73.89 | 76,13 | 44.48 | 54.15 |
| DTGB309s | 82.81 | 85,33 | 49.85 | 60.69 |
| DTGB414s | 41.36 | 42,61 | 24.90 | 30.31 |
| DTGB415s | 70.67 | 72,82 | 42.54 | 51.79 |
| DTGB417s | 105.44 | 108,65 | 63.48 | 77.28 |
| DTGB419s | 107.98 | 111,26 | 65.00 | 79.14 |
| DTGB757s | 107.20 | 110,45 | 64.53 | 78.56 |
| DTGB759s | 111.98 | 115,38 | 67.41 | 82.07 |

## SELECTION TABLE

| Model | Capacity[1) 2)] [kW] | | | |
|---|---|---|---|---|
| | R290 | R454B | R1234yf | R1234ze(E) |
| DTGF032s | 9.22 | 9,50 | 5.55 | 6.76 |
| DTGF0325s | 11.17 | 11,51 | 6.72 | 8.19 |
| DTGF033s | 14.53 | 14,98 | 8.75 | 10.65 |
| DTGF034s | 28.58 | 29,45 | 17.21 | 20.95 |
| DTGF052s | 10.44 | 10,75 | 6.28 | 7.65 |
| DTGF0525s | 11.12 | 11,56 | 6.75 | 8.22 |
| DTGF053s | 23.80 | 24,52 | 14.33 | 17.44 |
| DTGF054s | 29.36 | 30,25 | 17.67 | 21.52 |
| DTGF055s | 40.58 | 41,81 | 24.43 | 29.74 |
| DTGF082s | 10.88 | 11,21 | 6.55 | 7.97 |
| DTGF0825s | 12.49 | 12,86 | 7.52 | 9.15 |
| DTG-F083s | 25.36 | 26,13 | 15.27 | 18.59 |
| DTGF084s | 30.19 | 31,11 | 18.17 | 22.13 |
| DTGF085s | 52.62 | 54,22 | 31.68 | 38.57 |
| DTGF162s | 12.92 | 13,32 | 7.78 | 9.47 |
| DTGF1625s | 12.49 | 12,86 | 7.52 | 9.15 |
| DTGF163s | 25.36 | 26,13 | 15.27 | 18.59 |
| DTGF164s | 32.92 | 33,92 | 19.82 | 24.13 |
| DTGF165s | 50.62 | 52,16 | 30.48 | 37.10 |
| DTGF166s | 54.57 | 56,23 | 32.85 | 40.00 |
| DTGF167s | 55.35 | 57,04 | 33.32 | 40.57 |
| DTGF303s | 30.19 | 31,11 | 18.17 | 22.13 |
| DTGF304s | 39.02 | 40,20 | 23.49 | 28.59 |
| DTGF305s | 53.40 | 55,03 | 32.15 | 39.14 |
| DTGF306s | 73.55 | 75,78 | 44.28 | 53.90 |
| DTGF307s | 73.89 | 76,13 | 44.48 | 54.15 |
| DTGF309s | 82.81 | 85,33 | 49.85 | 60.69 |
| DTGF414s | 41.36 | 42,61 | 24.90 | 30.31 |
| DTGF415s | 70.67 | 72,82 | 42.54 | 51.79 |
| DTGF417s | 105.44 | 108,65 | 63.48 | 77.28 |
| DTGF419s | 107.98 | 111,26 | 65.00 | 79.14 |
| DTGF757s | 107.20 | 110,45 | 64.53 | 78.56 |
| DTGF759s | 111.98 | 115,38 | 67.41 | 82.07 |

**Note:** 1) the above data is based on clean system at ideal conditions; with impurities accumulated in the filter, the capacity may decrease
2) given capacity is for all available types of connection for the same model: solder [inch] and equivalent solder [mm]

## SELECTION FORMULAS

Filter Driers for liquid line are manufactured in compliance with ARI Standard 710. Flow rate of liquid refrigerant at a differential pressure of 0,07bar (1psi) is indicated by kW which is based on the temperature of liquid refrigerant 30°C (86°F), the evaporating temperature of refrigerant is -15°C (5°F).

***DTG*** *SERIES*

# UNI-FLOW FILTER DRIERS

(**Standard range:** for fluids GROUP 2 according to Directive 2014/68/EU or GROUP A1 according to ANSI-ASHRAE 34-2016).

The filter driers of series DTG are used in refrigeration system with unidirectional flow to absorb moisture and acid in the system and to filter out the impurities.

## FEATURES

- HIGH EFFICIENT IN MOISTURE ABSORPTION, FILTERING IMPURITY, ACID, PAINT REMAINS AND MUD REMOVAL
- HYBRID DESICCANT
- DURABLE AND SOLID FILTER CORES
- FILTERING FINENESS: 20μm
- CORROSION RESISTANT PAINTING SURVIVES SALT SPRAY TEST OF 500 HOURS
- CONNECTION TYPE: FLARE OR SOLDER

### GENERAL SPECIFICATIONS

- Applicable for all common HCFC, HFC, HFO refrigerants such as: R22, R134a, R404A, R407C, R410A, R507, R407A/F, R448A/ R449A, R452A, R450A/R513A
- Ambient temperature min./max.: -30°C / +70°C
- Medium temperature TS min./max.: -30°C / +120°C
- Max. operating pressure PS max.: 4,83 MPa (48,3 bar) - 700 PSI
- Installation position:
  - Flow direction corresponds to the arrow
  - Preferably installed in liquid line
- Certifications: UL/CSA and PED declaration

### TECNHICAL PARAMETERS *Desiccant Selection Table*

| | Medium Type | 80% 3Å desiccant and 20% active alumina | 100% 3Å desiccant |
|---|---|---|---|
| Refrigerant | HFC | Applicable | Applicable |
| | HCFC | Applicable | Applicable |
| | HFO | Applicable | Applicable |
| Oil[1)] | Mineral oil or AB | Applicable | Applicable |
| | Pure POE or PAG | Applicable | Applicable |
| | POE or PAG with additive | Not Applicable | Applicable |

**Note:** 1) When the systems use oil with additive, it is not recommended to use a core with alumina.

# UNI-FLOW FILTER DRIERS

*Model Designation Legend*

| | | | |
|---|---|---|---|
| **1** | **Product Code** | **Filter Drier Series** | |
| | DTG | Indicates unidirectional filter drier | |
| **2** | **Filter Core** | **Structure and Material** | |
| | B | Solid core, 100%3Å desiccant | |
| | F | Solid core, 80% 3Å desiccant and 20% active alumina | |
| **3** | **Internal Volume** | **Expressed in [ inch³ ]** | **Expressed in [ cm³ ]** |
| | 03 | 3 | 49 |
| | 05 | 5 | 82 |
| | 08 | 8 | 131 |
| | 16 | 16 | 262 |
| | 30 | 30 | 492 |
| | 41 | 41 | 672 |
| | 75 | 75 | 1229 |
| **4** | **Connection Size** | **Pos. 5 shows "0": Solder [inch]** | |
| | 02 | 1/4 | |
| | 25 | 5/16 | |
| | 03 | 3/8 | |
| | 04 | 1/2 | |
| | 05 | 5/8 | |
| | 06 | 3/4 | |
| | 07 | 7/8 | |
| | 09 | 1 1/8 | |
| | **Connection Size** | **Pos. 5 shows "1": Solder [mm]** | |
| | 06 | 6 | |
| | (08) * | (5/16” version can be used e.g. DTG-B03 **25**0) | |
| | 10 | 10 | |
| | 12 | 12 | |
| | (16) * | (5/8” version can be used e.g. DTG-B08 **05**0) | |
| | (22) * | (7/8” version can be used e.g. DTG-B16 **07**0) | |
| | 28 | 28 | |
| **5** | **Pipe Connection** | **Type** | |
| | 0 | Solder with inch connections | |
| | 1* | Solder with metric connections | |
| **6** | **Version Number** | **Description** | |
| | 901 | Standard product | |

**Note:** *Solder connections which fit to metric and inch are marked with inch product codes e.g. 8, 16 and 22 mm

# UNI-FLOW FILTER DRIERS

## MODEL DESIGNATION EXAMPLE

| Position Number | | | | | | According to Model Designation Legend |
|---|---|---|---|---|---|---|
| 1 | 2 | 3 | 4 | 5 | 6 | |
| **DTG** | B | 03 | 06 | 1 | 901 | Unidirectional filter drier |
| DTG | **B** | 03 | 06 | 1 | 901 | Solid filter core with 100% 3Å desiccant |
| DTG | B | **03** | 06 | 1 | 901 | 3 inch³ internal volume |
| DTG | B | 03 | **06** | 1 | 901 | When Pos. 5 is "1": connection size 6mm |
| DTG | B | 03 | 06 | **1** | 901 | Solder connection metric |
| DTG | B | 03 | 06 | 1 | **901** | Standard product |

## GENERAL CHARACTERISTICS OF DTG-B FILTER - FLARE CONNECTION

| Filter | Model | Part Number (multi package)[1] | Nominal Volume | | Connection | Dimensions & Weight [2] | | | | PED Category[3] (Fluid Group 2) |
|---|---|---|---|---|---|---|---|---|---|---|
| | | | | | SAE Flare | ØD | B | A | Weight | |
| | | | [inch³] | [cm³] | [inch] | [mm] | [mm] | [mm] | [ g ] | |
| DTGB032 | DTG-B03 024-901 | 10230009202 | 3 | 49 | 1/4 | 45 | 65 | 112 | 160 | Art. 4.3 |
| DTGB033 | DTG-B03 034-901 | 10230009102 | 3 | 49 | 3/8 | 45 | 65 | 125 | 160 | Art. 4.3 |
| DTGB034 | DTG-B03 044-901 | 10230009002 | 3 | 49 | 1/2 | 45 | 65 | 133 | 160 | Art. 4.3 |
| DTGB052 | DTG-B05 024-901 | 10230009802 | 5 | 82 | 1/4 | 69 | 76 | 123 | 450 | Art. 4.3 |
| DTGB053 | DTG-B05 034-901 | 10230009902 | 5 | 82 | 3/8 | 69 | 76 | 136 | 450 | Art. 4.3 |
| DTGB082 | DTG-B08 024-901 | 10230010002 | 8 | 131 | 1/4 | 69 | 98 | 145 | 550 | Art. 4.3 |
| DTGB083 | DTG-B08 034-901 | 10230010302 | 8 | 131 | 3/8 | 69 | 98 | 158 | 550 | Art. 4.3 |
| DTGB084 | DTG-B08 044-901 | 10230010102 | 8 | 131 | 1/2 | 69 | 98 | 166 | 550 | Art. 4.3 |
| DTGB162 | DTG-B16 024-901 | 10230011502 | 16 | 262 | 1/4 | 69 | 118 | 165 | 660 | Art. 4.3 |
| DTGB163 | DTG-B16 034-901 | 10230011702 | 16 | 262 | 3/8 | 69 | 118 | 178 | 660 | Art. 4.3 |
| DTGB164 | DTG-B16 044-901 | 10230011902 | 16 | 262 | 1/2 | 69 | 118 | 186 | 660 | Art. 4.3 |
| DTGB165 | DTG-B16 054-901 | 10230011802 | 16 | 262 | 5/8 | 69 | 118 | 195 | 660 | Art. 4.3 |
| DTGB166 | DTG-B16 064-901 | 10230013102 | 16 | 262 | 3/4 | 69 | 118 | 195 | 660 | Art. 4.3 |
| DTGB303 | DTG-B30 034-901 | 10230015402 | 30 | 492 | 3/8 | 81 | 193 | 253 | 1550 | Art. 4.3 |
| DTGB304 | DTG-B30 044-901 | 10230015502 | 30 | 492 | 1/2 | 81 | 193 | 261 | 1550 | Art. 4.3 |
| DTGB305 | DTG-B30 054-901 | 10230015702 | 30 | 492 | 5/8 | 81 | 193 | 270 | 1550 | Art. 4.3 |
| DTGB306 | DTG-B30 064-901 | 10230015802 | 30 | 492 | 3/4 | 81 | 193 | 270 | 1550 | Art. 4.3 |
| DTGB053 | DTG-B30 074-901 | 10230015602 | 30 | 492 | 7/8 | 81 | 193 | 283 | 1550 | Art. 4.3 |
| DTGB414 | DTG-B41 044-901 | 10230015302 | 41 | 672 | 1/2 | 94 | 194 | 262 | 2050 | Art. 4.3 |
| DTGB415 | DTG-B41 054-901 | 10230015202 | 41 | 672 | 5/8 | 94 | 194 | 271 | 2050 | Art. 4.3 |

**Note:** 1) Available also as industrial package. Contact Sanhua for more details.
2) Dimensions are rounded up to integral mm
3) PED Directive 2014/68/EU

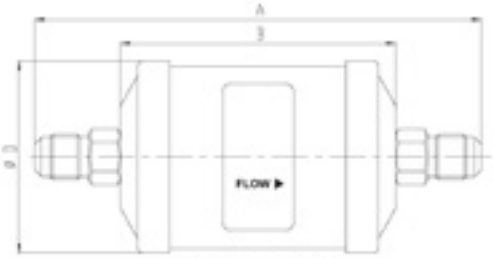


Flare Connection

# UNI-FLOW FILTER DRIERS

## GENERAL CHARACTERISTICS OF DTG-B FILTER - SOLDER CONNECTION

| Filter | Model[1] [inch] | Part Number (multi package)[2] [inch] | Model[1] [mm] | Part Number (multi package)[2] [mm] | Nominal Volumen | | Connection | | Dimensions & Weight[3] | | | | PED Category[4] (Fluid Group 1) |
|---|---|---|---|---|---|---|---|---|---|---|---|---|---|
| | | | | | | | Solder | | ØD | B | A | Weight | |
| | | | | | [inch³] | [cm³] | [inch] | [mm] | [mm] | [mm] | [mm] | [g] | |
| DTGF032s | DTG-B03 020-901 | 10230008302 | DTG-B03 061-901 | 10230008702 | 3 | 49 | 1/4 | 6 | 45 | 65 | 103 | 160 | Art. 4.3 |
| DTGF0325s | DTG-B03 250-901 | 10230008402 | DTG-B03 250-901 | 10230008402 | 3 | 49 | 5/16 | 8 | 45 | 65 | 103 | 160 | Art. 4.3 |
| DTGF033s | DTG-B03 030-901 | 10230008502 | DTG-B03 101-901 | 10230008802 | 3 | 49 | 3/8 | 10 | 45 | 65 | 103 | 160 | Art. 4.3 |
| DTGF034s | DTG-B03 040-901 | 10230008602 | DTG-B03 121-901 | 10230008902 | 3 | 49 | 1/2 | 12 | 45 | 65 | 113 | 160 | Art. 4.3 |
| DTGF052s | DTG-B05 020-901 | 10230010202 | DTG-B05 061-901 | 10230010802 | 5 | 82 | 1/4 | 6 | 69 | 76 | 114 | 450 | Art. 4.3 |
| DTGF0525s | DTG-B05 250-901 | 10230010402 | DTG-B05 250-901 | 10230010402 | 5 | 82 | 5/16 | 8 | 69 | 76 | 114 | 450 | Art. 4.3 |
| DTGF053s | DTG-B05 030-901 | 10230010502 | DTG-B05 101-901 | 10230010902 | 5 | 82 | 3/8 | 10 | 69 | 76 | 114 | 450 | Art. 4.3 |
| DTGF054s | DTG-B05 040-901 | 10230010602 | DTG-B05 121-901 | 10230011002 | 5 | 82 | 1/2 | 12 | 69 | 76 | 124 | 450 | Art. 4.3 |
| DTGF055s | DTG-B05 050-901 | 10230010702 | DTG-B05 050-901 | 10230010702 | 5 | 82 | 5/8 | 16 | 69 | 76 | 124 | 450 | Art. 4.3 |
| DTGF082s | DTG-B08 020-901 | 10230009502 | DTG-B08 061-901 | 10230011302 | 8 | 131 | 1/4 | 6 | 69 | 98 | 136 | 550 | Art. 4.3 |
| DTGF0825s | DTG-B08 250-901 | 10230009402 | DTG-B08 250-901 | 10230009402 | 8 | 131 | 5/16 | 8 | 69 | 98 | 136 | 550 | Art. 4.3 |
| DTGF083s | DTG-B08 030-901 | 10230009302 | DTG-B08 101-901 | 10230011402 | 8 | 131 | 3/8 | 10 | 69 | 98 | 136 | 550 | Art. 4.3 |
| DTGF084s | DTG-B08 040-901 | 10230009602 | DTG-B08 121-901 | 10230011602 | 8 | 131 | 1/2 | 12 | 69 | 98 | 146 | 550 | Art. 4.3 |
| DTGF085s | DTG-B08 050-901 | 10230009702 | DTG-B08 050-901 | 10230009702 | 8 | 131 | 5/8 | 16 | 69 | 98 | 146 | 550 | Art. 4.3 |
| DTGF162s | DTG-B16 020-901 | 10230012002 | DTG-B16 061-901 | 10230012702 | 16 | 262 | 1/4 | 6 | 69 | 118 | 156 | 660 | Art. 4.3 |
| DTGF1625s | DTG-B16 250-901 | 10230012102 | DTG-B16 250-901 | 10230012102 | 16 | 262 | 5/16 | 8 | 69 | 118 | 156 | 660 | Art. 4.3 |
| DTGF163s | DTG-B16 030-901 | 10230012202 | DTG-B16 101-901 | 10230012802 | 16 | 262 | 3/8 | 10 | 69 | 118 | 156 | 660 | Art. 4.3 |
| DTGF164s | DTG-B16 040-901 | 10230012302 | DTG-B16 121-901 | 10230015902 | 16 | 262 | 1/2 | 12 | 69 | 118 | 166 | 660 | Art. 4.3 |
| DTGF165s | DTG-B16 050-901 | 10230012402 | DTG-B16 050-901 | 10230012402 | 16 | 262 | 5/8 | 16 | 69 | 118 | 166 | 660 | Art. 4.3 |
| DTGF166s | DTG-B16 060-901 | 10230012502 | - | - | 16 | 262 | 3/4 | - | 69 | 118 | 178 | 660 | Art. 4.3 |
| DTGF167s | DTG-B16 070-901 | 10230012602 | DTG-B16 070-901 | 10230012602 | 16 | 262 | 7/8 | 22 | 69 | 118 | 178 | 660 | Art. 4.3 |
| DTGF303s | DTG-B30 030-901 | 10230013902 | DTG-B30 101-901 | 10230014502 | 30 | 492 | 3/8 | 10 | 81 | 193 | 231 | 1550 | Art. 4.3 |
| DTGF304s | DTG-B30 040-901 | 10230014002 | DTG-B30 121-901 | 10230014602 | 30 | 492 | 1/2 | 12 | 81 | 193 | 241 | 1550 | Art. 4.3 |
| DTGF305s | DTG-B30 050-901 | 10230014102 | DTG-B30 050-901 | 10230014102 | 30 | 492 | 5/8 | 16 | 81 | 193 | 241 | 1550 | Art. 4.3 |
| DTGF306s | DTG-B30 060-901 | 10230014202 | - | - | 30 | 492 | 3/4 | - | 81 | 193 | 253 | 1550 | Art. 4.3 |
| DTGF307s | DTG-B30 070-901 | 10230014302 | DTG-B30 070-901 | 10230014302 | 30 | 492 | 7/8 | 22 | 81 | 193 | 253 | 1550 | Art. 4.3 |
| DTGF309s | DTG-B30 090-901 | 10230014402 | DTG-B30 281-901 | 10230014802 | 30 | 492 | 1 1/8 | 28 | 81 | 193 | 263 | 1550 | Art. 4.3 |
| DTGF414s | DTG-B41 040-901 | 10230013202 | DTG-B41 121-901 | 10230013602 | 41 | 672 | 1/2 | 12 | 94 | 194 | 242 | 2050 | Art. 4.3 |
| DTGF415s | DTG-B41 050-901 | 10230013302 | DTG-B41 050-901 | 10230013302 | 41 | 672 | 5/8 | 16 | 94 | 194 | 242 | 2050 | Art. 4.3 |
| DTGF417s | DTG-B41 070-901 | 10230013402 | DTG-B41 070-901 | 10230013402 | 41 | 672 | 7/8 | 22 | 94 | 194 | 254 | 2050 | Art. 4.3 |
| DTGF419s | DTG-B41 090-901 | 10230013502 | DTG-B41 281-901 | 10230013802 | 41 | 672 | 1 1/8 | 28 | 94 | 194 | 264 | 2050 | Art. 4.3 |
| DTGF757s | DTG-B75 070-901 | 10230014902 | DTG-B75 070-901 | 10230014902 | 75 | 1229 | 7/8 | 22 | 94 | 333 | 393 | 3400 | Art. 4.3 |
| DTGF759s | DTG-B75 090-901 | 10230015002 | DTG-B75 281-901 | 10230015102 | 75 | 1229 | 1 1/8 | 28 | 94 | 333 | 403 | 3400 | Art. 4.3 |

**Note:** * Available also as industrial package. Contact Sanhua for more details.

1) Dimensions are rounded up to integral mm

2) PED Directive 2014/68/EU

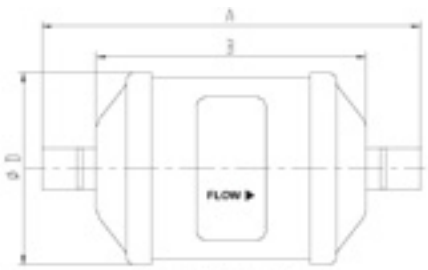


Solder Connection

# UNI-FLOW FILTER DRIERS

## GENERAL CHARACTERISTICS OF DTG-F FILTER - FLARE CONNECTION

| Filter | Model[1)] | Part Number (multi package)[2)] | Nominal Volume | | Connection | Dimensions & Weight[3)] | | | | PED Category[4)] (Fluid Group 2) |
|---|---|---|---|---|---|---|---|---|---|---|
| | | | | | SAE Flare | ØD | B | A | Weight | |
| | | | [inch³] | [cm³] | [inch] | [mm] | [mm] | [mm] | [ g ] | |
| DTGF032 | DTG-F03 024-901 | 10230018002 | 3 | 49 | 1/4 | 45 | 65 | 112 | 160 | Art. 4.3 |
| DTGF033 | DTG-F03 034-901 | 10230017902 | 3 | 49 | 3/8 | 45 | 65 | 125 | 160 | Art. 4.3 |
| DTGF034 | DTG-F03 044-901 | 10230017802 | 3 | 49 | 1/2 | 45 | 65 | 133 | 160 | Art. 4.3 |
| DTGF052 | DTG-F05 024-901 | 10230016802 | 5 | 82 | 1/4 | 69 | 76 | 123 | 450 | Art. 4.3 |
| DTGF053 | DTG-F05 034-901 | 10230016702 | 5 | 82 | 3/8 | 69 | 76 | 136 | 450 | Art. 4.3 |
| DTGF082 | DTG-F08 024-901 | 10230019002 | 8 | 131 | 1/4 | 69 | 98 | 145 | 550 | Art. 4.3 |
| DTGF083 | DTG-F08 034-901 | 10230019102 | 8 | 131 | 3/8 | 69 | 98 | 158 | 550 | Art. 4.3 |
| DTGF084 | DTG-F08 044-901 | 10230019202 | 8 | 131 | 1/2 | 69 | 98 | 166 | 550 | Art. 4.3 |
| DTGF162 | DTG-F16 024-901 | 10230020402 | 16 | 262 | 1/4 | 69 | 118 | 165 | 660 | Art. 4.3 |
| DTGF163 | DTG-F16 034-901 | 10230020502 | 16 | 262 | 3/8 | 69 | 118 | 178 | 660 | Art. 4.3 |
| DTGF164 | DTG-F16 044-901 | 10230020602 | 16 | 262 | 1/2 | 69 | 118 | 186 | 660 | Art. 4.3 |
| DTGF165 | DTG-F16 054-901 | 10230020702 | 16 | 262 | 5/8 | 69 | 118 | 195 | 660 | Art. 4.3 |
| DTGF166 | DTG-F16 064-901 | 10230020802 | 16 | 262 | 3/4 | 69 | 118 | 195 | 660 | Art. 4.3 |
| DTGF303 | DTG-F30 034-901 | 10230021902 | 30 | 492 | 3/8 | 81 | 193 | 253 | 1550 | Art. 4.3 |
| DTGF304 | DTG-F30 044-901 | 10230022002 | 30 | 492 | 1/2 | 81 | 193 | 261 | 1550 | Art. 4.3 |
| DTGF305 | DTG-F30 054-901 | 10230022102 | 30 | 492 | 5/8 | 81 | 193 | 270 | 1550 | Art. 4.3 |
| DTGF306 | DTG-F30 064-901 | 10230022202 | 30 | 492 | 3/4 | 81 | 193 | 270 | 1550 | Art. 4.3 |
| DTGF307 | DTG-F30 074-901 | 10230022302 | 30 | 492 | 7/8 | 81 | 193 | 283 | 1550 | Art. 4.3 |
| DTGF414 | DTG-F41 044-901 | 10230031402 | 41 | 672 | 1/2 | 94 | 194 | 262 | 2050 | Art. 4.3 |
| DTGF414 | DTG-F41 054-901 | 10230031502 | 41 | 672 | 5/8 | 94 | 194 | 271 | 2050 | Art. 4.3 |

**Note:** 1) Available also as industrial package. Contact Sanhua for more details.
2) Delivery time on request
3) Dimensions are rounded up to integral mm
4) PED Directive 2016/68/EU. Category evaluated considering product as a “vessel”

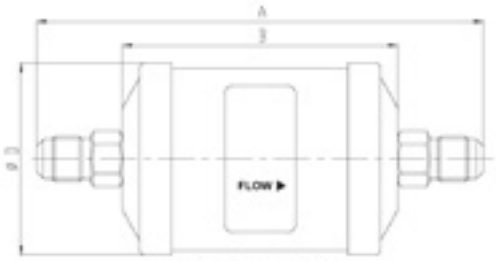


Flare Connection

# UNI-FLOW FILTER DRIERS

## GENERAL CHARACTERISTICS OF DTG-F FILTER - SOLDER CONNECTION

| Filter | Model[1] [inch] | Part Number (multi package)[2] [inch] | Model[1] [mm] | Part Number (multi package)[2] [mm] | Nominal Volumen | | Connection | | Dimensions & Weight[3] | | | | PED Category[4] (Fluid Group 1) |
|---|---|---|---|---|---|---|---|---|---|---|---|---|---|
| | | | | | | | Solder | | ØD | B | A | Weight | |
| | | | | | [inch³] | [cm³] | [inch] | [mm] | [mm] | [mm] | [mm] | [g] | |
| DTGF032s | DTG-F03 020-901 | 10230016102 | DTG-F03 061-901 | 10230016502 | 3 | 49 | 1/4 | 6 | 45 | 65 | 103 | 160 | Art. 4.3 |
| DTGF0325s | DTG-F03 250-901 | 10230016202 | DTG-F03 250-901 | 10230016202 | 3 | 49 | 5/16 | 8 | 45 | 65 | 103 | 160 | Art. 4.3 |
| DTGF033s | DTG-F03 030-901 | 10230016302 | DTG-F03 101-901 | 10230016602 | 3 | 49 | 3/8 | 10 | 45 | 65 | 103 | 160 | Art. 4.3 |
| DTGF034s | DTG-F03 040-901 | 10230016402 | DTG-F03 121-901 | 10230016002 | 3 | 49 | 1/2 | 12 | 45 | 65 | 113 | 160 | Art. 4.3 |
| DTGF052s | DTG-F05 020-901 | 10230017702 | DTG-F05 061-901 | 10230017202 | 5 | 82 | 1/4 | 6 | 69 | 76 | 114 | 450 | Art. 4.3 |
| DTGF0525s | DTG-F05 250-901 | 10230017602 | DTG-F05 250-901 | 10230017602 | 5 | 82 | 5/16 | 8 | 69 | 76 | 114 | 450 | Art. 4.3 |
| DTGF053s | DTG-F05 030-901 | 10230017502 | DTG-F05 101-901 | 10230017102 | 5 | 82 | 3/8 | 10 | 69 | 76 | 114 | 450 | Art. 4.3 |
| DTGF054s | DTG-F05 040-901 | 10230017402 | DTG-F05 121-901 | 10230017002 | 5 | 82 | 1/2 | 12 | 69 | 76 | 124 | 450 | Art. 4.3 |
| DTGF055s | DTG-F05 050-901 | 10230017302 | DTG-F05 050-901 | 10230017302 | 5 | 82 | 5/8 | 16 | 69 | 76 | 124 | 450 | Art. 4.3 |
| DTGF082s | DTG-F08 020-901 | 10230018102 | DTG-F08 061-901 | 10230018602 | 8 | 131 | 1/4 | 6 | 69 | 98 | 136 | 550 | Art. 4.3 |
| DTGF0825s | DTG-F08 250-901 | 10230018202 | DTG-F08 250-901 | 10230018202 | 8 | 131 | 5/16 | 8 | 69 | 98 | 136 | 550 | Art. 4.3 |
| DTGF083s | DTG-F08 030-901 | 10230018302 | DTG-F08 101-901 | 10230018702 | 8 | 131 | 3/8 | 10 | 69 | 98 | 136 | 550 | Art. 4.3 |
| DTGF084s | DTG-F08 040-901 | 10230018402 | DTG-F08 121-901 | 10230018802 | 8 | 131 | 1/2 | 12 | 69 | 98 | 146 | 550 | Art. 4.3 |
| DTGF085s | DTG-F08 050-901 | 10230018502 | DTG-F08 050-901 | 10230018502 | 8 | 131 | 5/8 | 16 | 69 | 98 | 146 | 550 | Art. 4.3 |
| DTGF162s | DTG-F16 020-901 | 10230019302 | DTG-F16 061-901 | 10230020002 | 16 | 262 | 1/4 | 6 | 69 | 118 | 156 | 660 | Art. 4.3 |
| DTGF1625s | DTG-F16 250-901 | 10230019402 | DTG-F16 250-901 | 10230019402 | 16 | 262 | 5/16 | 8 | 69 | 118 | 156 | 660 | Art. 4.3 |
| DTGF163s | DTG-F16 030-901 | 10230019502 | DTG-F16 101-901 | 10230020102 | 16 | 262 | 3/8 | 10 | 69 | 118 | 156 | 660 | Art. 4.3 |
| DTGF164s | DTG-F16 040-901 | 10230019602 | DTG-F16 121-901 | 10230020202 | 16 | 262 | 1/2 | 12 | 69 | 118 | 166 | 660 | Art. 4.3 |
| DTGF165s | DTG-F16 050-901 | 10230019702 | DTG-F16 050-901 | 10230019702 | 16 | 262 | 5/8 | 16 | 69 | 118 | 166 | 660 | Art. 4.3 |
| DTGF166s | DTG-F16 060-901 | 10230019802 | - | - | 16 | 262 | 3/4 | - | 69 | 118 | 178 | 660 | Art. 4.3 |
| DTGF167s | DTG-F16 070-901 | 10230019902 | DTG-F16 070-901 | 10230019902 | 16 | 262 | 7/8 | 22 | 69 | 118 | 178 | 660 | Art. 4.3 |
| DTGF303s | DTG-F30 030-901 | 10230020902 | DTG-F30 101-901 | 10230021502 | 30 | 492 | 3/8 | 10 | 81 | 193 | 231 | 1550 | Art. 4.3 |
| DTGF304s | DTG-F30 040-901 | 10230021002 | DTG-F30 121-901 | 10230021602 | 30 | 492 | 1/2 | 12 | 81 | 193 | 241 | 1550 | Art. 4.3 |
| DTGF305s | DTG-F30 050-901 | 10230021102 | DTG-F30 050-901 | 10230021102 | 30 | 492 | 5/8 | 16 | 81 | 193 | 241 | 1550 | Art. 4.3 |
| DTGF306s | DTG-F30 060-901 | 10230021202 | - | - | 30 | 492 | 3/4 | - | 81 | 193 | 253 | 1550 | Art. 4.3 |
| DTGF307s | DTG-F30 070-901 | 10230021302 | DTG-F30 070-901 | 10230021302 | 30 | 492 | 7/8 | 22 | 81 | 193 | 253 | 1550 | Art. 4.3 |
| DTGF309s | DTG-F30 090-901 | 10230021402 | DTG-F30 281-901 | 10230021802 | 30 | 492 | 1 1/8 | 28 | 81 | 193 | 263 | 1550 | Art. 4.3 |
| DTGF414s | DTG-F41 040-901 | 10230022402 | DTG-F41 121-901 | 10230022802 | 41 | 672 | 1/2 | 12 | 94 | 194 | 242 | 2050 | Art. 4.3 |
| DTGF415s | DTG-F41 050-901 | 10230022502 | DTG-F41 050-901 | 10230022502 | 41 | 672 | 5/8 | 16 | 94 | 194 | 242 | 2050 | Art. 4.3 |
| DTGF417s | DTG-F41 070-901 | 10230022602 | DTG-F41 070-901 | 10230022602 | 41 | 672 | 7/8 | 22 | 94 | 194 | 254 | 2050 | Art. 4.3 |
| DTGF419s | DTG-F41 090-901 | 10230022702 | DTG-F41 281-901 | 10230023002 | 41 | 672 | 1 1/8 | 28 | 94 | 194 | 264 | 2050 | Art. 4.3 |
| DTGF757s | DTG-F75 070-901 | 10230023102 | DTG-F75 070-901 | 10230023102 | 75 | 1229 | 7/8 | 22 | 94 | 333 | 393 | 3400 | Art. 4.3 |
| DTGF759s | DTG-F75 090-901 | 10230031102 | DTG-F75 281-901 | 10230023302 | 75 | 1229 | 1 1/8 | 28 | 94 | 333 | 403 | 3400 | Art. 4.3 |

**Note:** 1) Available also as industrial package. Contact Sanhua for more details.
2) Delivery time on request
3) Dimensions are rounded up to integral mm
4) PED Directive 2016/68/EU. Category evaluated considering product as a "vessel"

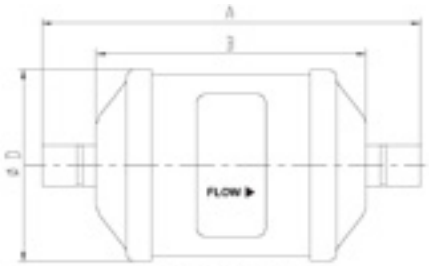


Solder Connection

# UNI-FLOW FILTER DRIERS

## SELECTION TABLE

| Model | Capacity [ kW ] 1) 3) | | | | | Moisture Absorption (gram $H_2O$) | | | | | | | |
|---|---|---|---|---|---|---|---|---|---|---|---|---|---|
| | R134a | R404A / R507A | R22 | R407C 2 | R410A | R134a | | R404A / R507A | | R407C 2 / R410A | | R22 | |
| | | | | | | 75°F | 125°F | 75°F | 125°F | 75°F | 125°F | 75°F | 125°F |
| | | | | | | 23,9°C | 51,7°C | 23,9°C | 51,7°C | 23,9°C | 51,7°C | 23,9°C | 51,7°C |
| DTGB032s | 7,7 | 6,7 | 8,1 | 8,1 | 8,1 | 4,2 | 3,8 | 5,7 | 3,4 | 3,4 | 3,1 | 3,7 | 3,4 |
| DTGB0325s | 9,5 | 6,7 | 9,8 | 9,8 | 9,8 | 4,2 | 3,8 | 5,7 | 3,4 | 3,4 | 3,1 | 3,7 | 3,4 |
| DTGB033s | 12,3 | 8,8 | 12,7 | 12,7 | 12,7 | 4,2 | 3,8 | 5,7 | 3,4 | 3,4 | 3,1 | 3,7 | 3,4 |
| DTGB034s | 24,6 | 17,2 | 25,0 | 25,0 | 25,0 | 4,2 | 3,8 | 5,7 | 3,4 | 3,4 | 3,1 | 3,7 | 3,4 |
| DTGB052s | 9,5 | 6,0 | 9,1 | 9,1 | 9,1 | 11,6 | 10,9 | 10,9 | 8,9 | 10,9 | 9,5 | 11,4 | 9,7 |
| DTGB0525s | 9,5 | 6,7 | 9,8 | 9,8 | 9,8 | 11,6 | 10,9 | 10,9 | 8,9 | 10,9 | 9,5 | 11,4 | 9,7 |
| DTGB053s | 20,0 | 14,1 | 20,8 | 20,8 | 20,8 | 11,6 | 10,9 | 10,9 | 8,9 | 10,9 | 9,5 | 11,4 | 9,7 |
| DTGB054s | 25,3 | 17,9 | 25,7 | 25,7 | 25,7 | 11,6 | 10,9 | 10,9 | 8,9 | 10,9 | 9,5 | 11,4 | 9,7 |
| DTGB055s | 34,8 | 24,6 | 35,5 | 35,5 | 35,5 | 11,6 | 10,9 | 10,9 | 8,9 | 10,9 | 9,5 | 11,4 | 9,7 |
| DTGB082s | 9,1 | 6,3 | 9,5 | 9,5 | 9,5 | 14,8 | 14,2 | 16,3 | 13,4 | 14,8 | 13,0 | 15,5 | 13,1 |
| DTGB0825s | 10,6 | 7,4 | 10,9 | 10,9 | 10,9 | 14,8 | 14,2 | 16,3 | 13,4 | 14,8 | 13,0 | 15,5 | 13,1 |
| DTGB083s | 21,5 | 15,1 | 22,2 | 22,2 | 22,2 | 14,8 | 14,2 | 16,3 | 13,4 | 14,8 | 13,0 | 15,5 | 13,1 |
| DTGB084s | 25,7 | 17,9 | 26,4 | 26,4 | 26,4 | 14,8 | 14,2 | 16,3 | 13,4 | 14,8 | 13,0 | 15,5 | 13,1 |
| DTGB085s | 44,7 | 31,7 | 46,1 | 46,1 | 46,1 | 14,8 | 14,2 | 16,3 | 13,4 | 14,8 | 13,0 | 15,5 | 13,1 |
| DTGB162s | 10,9 | 7,7 | 11,3 | 11,3 | 11,3 | 20,6 | 19,5 | 33,2 | 18,3 | 20,6 | 17,6 | 20,9 | 17,7 |
| DTGB1625s | 10,6 | 7,4 | 10,9 | 10,9 | 10,9 | 20,6 | 19,5 | 33,2 | 18,3 | 20,6 | 17,6 | 20,9 | 17,7 |
| DTGB163s | 21,5 | 15,1 | 22,2 | 22,2 | 22,2 | 20,6 | 19,5 | 33,2 | 18,3 | 20,6 | 17,6 | 20,9 | 17,7 |
| DTGB164s | 27,8 | 19,3 | 28,8 | 28,8 | 28,8 | 20,6 | 19,5 | 33,2 | 18,3 | 20,6 | 17,6 | 20,9 | 17,7 |
| DTGB165s | 43,3 | 30,6 | 44,3 | 44,3 | 44,3 | 20,6 | 19,5 | 33,2 | 18,3 | 20,6 | 17,6 | 20,9 | 17,7 |
| DTGB166s | 46,4 | 32,7 | 47,8 | 47,8 | 47,8 | 20,6 | 19,5 | 33,2 | 18,3 | 20,6 | 17,6 | 20,9 | 17,7 |
| DTGB167s | 47,1 | 33,4 | 48,5 | 48,5 | 48,5 | 20,6 | 19,5 | 33,2 | 18,3 | 20,6 | 17,6 | 20,9 | 17,7 |
| DTGB303s | 25,7 | 17,9 | 26,4 | 26,4 | 26,4 | 51,4 | 48,7 | 83,4 | 51,4 | 51,3 | 43,7 | 52,1 | 44,1 |
| DTGB304s | 33,1 | 23,2 | 34,1 | 34,1 | 34,1 | 51,4 | 48,7 | 83,4 | 51,4 | 51,3 | 43,7 | 52,1 | 44,1 |
| DTGB305s | 45,7 | 32,0 | 46,8 | 46,8 | 46,8 | 51,4 | 48,7 | 83,4 | 51,4 | 51,3 | 43,7 | 52,1 | 44,1 |
| DTGB306s | 62,6 | 44,0 | 64,4 | 64,4 | 64,4 | 51,4 | 48,7 | 83,4 | 51,4 | 51,3 | 43,7 | 52,1 | 44,1 |
| DTGB307s | 63,0 | 44,3 | 64,7 | 64,7 | 64,7 | 51,4 | 48,7 | 83,4 | 51,4 | 51,3 | 43,7 | 52,1 | 44,1 |
| DTGB309s | 70,0 | 49,2 | 72,5 | 72,5 | 72,5 | 51,4 | 48,7 | 83,4 | 51,4 | 51,3 | 43,7 | 52,1 | 44,1 |
| DTGB414s | 35,2 | 24,6 | 36,2 | 36,2 | 36,2 | 63,7 | 59,7 | 103,5 | 55,7 | 63,7 | 58,9 | 70,2 | 59,4 |
| DTGB415s | 60,8 | 42,9 | 61,9 | 61,9 | 62,9 | 63,7 | 59,7 | 103,5 | 55,7 | 63,7 | 58,9 | 70,2 | 59,4 |
| DTGB417s | 90,4 | 63,7 | 92,5 | 92,5 | 92,5 | 63,7 | 59,7 | 103,5 | 55,7 | 63,7 | 58,9 | 70,2 | 59,4 |
| DTGB419s | 92,1 | 64,7 | 94,6 | 94,6 | 94,6 | 63,7 | 59,7 | 103,5 | 55,7 | 63,7 | 58,9 | 70,2 | 59,4 |
| DTGB757s | 91,4 | 64,0 | 93,9 | 93,9 | 93,9 | 123,3 | 115,6 | 200,3 | 107,9 | 123,3 | 114,0 | 135,8 | 114,9 |
| DTGB759s | 95,3 | 67,2 | 98,1 | 98,1 | 98,1 | 123,3 | 115,6 | 200,3 | 107,9 | 123,3 | 114,0 | 135,8 | 114,9 |

**Note:**
1) the above data is based on clean system at ideal conditions: with impurities, accumulated in the filter, the capacity may decrease
2) R407C capacity is based on dew point conditions
3) given capacity is for all available types of connection for the same model: flare/solder [inch] and equivalent solder [mm]

# UNI-FLOW FILTER DRIERS

## SELECTION TABLE

| Model | Capacity[1) 2)] [kW] | | | | | | |
|---|---|---|---|---|---|---|---|
| | R407A | R407F | R448A | R449A | R452A | R450A | R513A |
| DTGB032 | 7,27 | 8,02 | 7,29 | 7,20 | 5,52 | 7,04 | 6,28 |
| DTGB0325 | 8,81 | 9,72 | 8,83 | 8,72 | 6,68 | 8,53 | 7,61 |
| DTGB033 | 11,47 | 12,64 | 11,50 | 11,35 | 8,7 | 11,10 | 9,90 |
| DTGB034 | 22,55 | 24,86 | 22,61 | 22,32 | 17,10 | 21,82 | 19,48 |
| DTGB052 | 8,24 | 9,08 | 8,26 | 8,15 | 6,25 | 7,97 | 7,11 |
| DTGB0525 | 8,85 | 9,76 | 8,87 | 8,76 | 6,71 | 8,57 | 7,64 |
| DTGB053 | 18,78 | 20,70 | 18,83 | 18,59 | 14,24 | 18,17 | 16,22 |
| DTGB054 | 23,17 | 25,54 | 23,22 | 22,93 | 17,57 | 22,42 | 20,01 |
| DTGB055 | 32,02 | 35,30 | 32,10 | 31,69 | 24,28 | 30,99 | 27,65 |
| DTGB082 | 8,58 | 9,46 | 8,60 | 8,49 | 6,51 | 8,31 | 7,41 |
| DTGB0825 | 9,85 | 10,86 | 9,88 | 9,75 | 7,47 | 9,53 | 8,51 |
| DTGB083 | 20,01 | 22,06 | 20,06 | 19,80 | 15,18 | 19,37 | 17,28 |
| DTGB084 | 23,83 | 26,26 | 23,88 | 23,58 | 18,07 | 23,05 | 20,57 |
| DTGB085 | 41,53 | 45,78 | 41,63 | 41,09 | 31,49 | 40,19 | 35,86 |
| DTGB162 | 10,20 | 11,24 | 10,22 | 10,09 | 7,73 | 9,87 | 8,81 |
| DTGB1625 | 9,85 | 10,86 | 9,88 | 9,75 | 7,47 | 9,53 | 8,51 |
| DTGB163 | 20,01 | 22,06 | 20,06 | 19,80 | 15,18 | 19,37 | 17,28 |
| DTGB164 | 25,98 | 28,64 | 26,04 | 25,71 | 19,70 | 25,14 | 22,43 |
| DTGB165 | 39,95 | 44,04 | 40,05 | 39,53 | 30,29 | 38,66 | 34,50 |
| DTGB166 | 43,07 | 47,48 | 43,17 | 42,62 | 32,66 | 41,68 | 37,19 |
| DTGB167 | 43,69 | 48,16 | 43,79 | 43,23 | 33,13 | 42,27 | 37,72 |
| DTGB303 | 23,83 | 26,26 | 23,88 | 23,58 | 18,07 | 23,05 | 20,57 |
| DTGB304 | 30,79 | 33,94 | 30,86 | 30,47 | 23,35 | 29,79 | 26,59 |
| DTGB305 | 42,15 | 46,46 | 42,24 | 41,70 | 31,96 | 40,78 | 36,39 |
| DTGB306 | 58,04 | 63,98 | 58,18 | 57,43 | 44,01 | 56,16 | 50,12 |
| DTGB307 | 58,31 | 64,28 | 58,45 | 57,70 | 44,22 | 56,42 | 50,35 |
| DTGB309 | 65,36 | 72,04 | 65,51 | 64,67 | 49,56 | 63,24 | 56,43 |
| DTGB414 | 32,64 | 35,98 | 32,72 | 32,30 | 24,75 | 31,58 | 28,18 |
| DTGB415 | 55,77 | 61,48 | 55,90 | 55,19 | 42,29 | 53,97 | 48,16 |
| DTGB417 | 83,21 | 91,73 | 83,41 | 82,34 | 63,10 | 80,52 | 71,85 |
| DTGB419 | 85,22 | 93,93 | 85,41 | 84,32 | 64,62 | 82,46 | 73,58 |
| DTGB757 | 84,60 | 93,26 | 84,80 | 83,71 | 64,15 | 81,86 | 73,05 |
| DTGB759 | 88,37 | 97,41 | 88,58 | 87,44 | 67,01 | 85,51 | 76,31 |

**Note:** 1) the above data is based on filter driers with inch connections and clean system at ideal conditions: with impurities accumulated in the filter, the capacity may decrease

2) given capacity is for all available types of connection for the same model: flare/solder [inch] and equivalent solder [mm]

## SELECTION FORMULAS

Filter Driers for liquid line are manufactured in compliance with ARI Standard 710. Maximum flow rate of liquid refrigerant at a differential pressure of 0,07bar (1psi) is indicated by kW (ton) which is based on the temperature of liquid refrigerant 30°C (86°F), the evaporating temperature of -15°C (5°F) and the following mass flow:

- 0,40 kg/min/kW (3.1 lb/min/ton) R134a
- 0,53 kg/min/kW (4.1 lb/min/ton) R404A, R507A
- 0,39 kg/min/kW (3.0 lb/min/ton) R22, R407C
- 0,36 kg/min/kW (2.8 lb/min/ton) R410A

**Note:** Data on water absorption is based on the following EPD (method: ASHRAE Standard 63.1):

- 60ppm R22
- 50ppm R134a
- 50ppm R404A
- 50ppm R407C
- 50ppm R410A
- 50ppm R507A

***STG*** *SERIES*

# BI-FLOW FILTER DRIERS

(Standard range: for fluids GROUP 2 according to Directive 2014/68/EU or GROUP A1 according to ANSI-ASHRAE 34-2016)

The filter driers of series STG are used in refrigeration system with bidirectional flow to absorb moisture and acid in the system and to filter out the impurities.

## FEATURES

- HIGH EFFICIENT IN MOISTURE ABSORPTION, FILTERING IMPURITY, ACID, PAINT REMAINS AND MUD REMOVAL
- HYBRID DESICCANT
- DURABLE AND SOLID FILTER CORES
- FILTERING FINENESS: 20μm
- CORROSION RESISTANT PAINTING CAN SURVIVE SALT SPRAY TEST OF 500 HOURS
- CONNECTION TYPE: FLARE OR SOLDER

### GENERAL SPECIFICATIONS

- Applicable for all common HCFC, HFC, HFO refrigerants such as: R22, R134a, R404A, R407C, R410A, R507, R407A/F, R448A/R449A, R452A, R450A/R513A
- Ambient temperature min./max.: -30°C / +70°C
- Medium temperature TS min./max.: -30°C / +120°C
- Max. operating pressure PS: 4,83 MPa (48,3 bar)
- Installation position: preferably installed in liquid line
- Certifications: UL/CSA and PED declaration

### TECHNICAL PARAMETERS *Desiccant Selection Table*

| | Medium Type | 80% 3Å Desiccant and 20% Active Alumina | 100% 3Å Desiccant |
|---|---|---|---|
| Refrigerant | HFC | Applicable | Applicable |
| | HCFC | Applicable | Applicable |
| | HFO | Applicable | Applicable |
| Oil[1)] | Mineral oil or AB | Applicable | Applicable |
| | Pure POE or PAG | Applicable | Applicable |
| | POE or PAG with additive | Not Applicable | Applicable |

**Note:** 1) When the systems use oil with additive, it is not recommended to use a core with alumina

# BI-FLOW FILTER DRIERS

*Model Designation Legend*

| | | | |
|---|---|---|---|
| **1** | **Product Code** | **Filter Drier Series** | |
| | STG | Indicates bidirectional filter drier | |
| **2** | **Filter Core** | **Structure and Material** | |
| | B | Solid core, 100%3Å desiccant | |
| | F | Solid core, 80% 3Å desiccant and 20% active alumina | |
| **3** | **Internal Volume** | **Expressed in [ inch³ ]** | **Expressed in [ cm³ ]** |
| | 05 | 5 | 82 |
| | 08 | 8 | 131 |
| | 16 | 16 | 262 |
| | 30 | 30 | 492 |
| **4** | **Connection Size** | **Pos. 5 shows "0": Solder [inch]** | **Pos. 5 shows "4": SAE Flare [inch]** |
| | 02 | 1/4 | 1/4 |
| | 25 | 5/16 | - |
| | 03 | 3/8 | 3/8 |
| | 04 | 1/2 | 1/2 |
| | 05 | 5/8 | 5/8 |
| | 06 | 3/4 | 3/4 |
| | 07 | 7/8 | 7/8 |
| | 09 | 1 1/8 | - |
| | **Connection Size** | **Pos. 5 shows "1": Solder [mm]** | |
| | 06 | 6 | |
| | (08) * | (5/16" version can be used e.g. STG-B08 **25**0) | |
| | 10 | 10 | |
| | 12 | 12 | |
| | (16) * | (5/8" version can be used e.g. STG-B16 **05**0) | |
| | (22) * | (7/8" version can be used e.g. STG-B16 **07**0) | |
| | 28 | 28 | |
| **5** | **Pipe Connection** | **Type** | |
| | 0 | Solder with inch connections | |
| | 1 * | Solder with metric connections | |
| | 4 | SAE flare connections | |
| **6** | **Version Number** | **Description** | |
| | 901 | Standard product | |

**Note:** * Solder connections which fit to metric and inch are marked with inch product codes e.g. 8, 16 and 22 mm.

# BI-FLOW FILTER DRIERS

## MODEL DESIGNATION EXAMPLE

| Position Number | | | | | | According to Model Designation Legend |
|---|---|---|---|---|---|---|
| 1 | 2 | 3 | 4 | 5 | 6 | |
| **STG** | B | 05 | 06 | 1 | 901 | Bidirectional filter drier |
| STG | **B** | 05 | 06 | 1 | 901 | Solid filter core with 100% 3Å desiccant |
| STG | B | **05** | 06 | 1 | 901 | 5 inch³ internal volume |
| STG | B | 05 | **06** | 1 | 901 | When Pos. 5 is "1": connection size 6mm |
| STG | B | 05 | 06 | **1** | 901 | Solder connection metric |
| STG | B | 05 | 06 | 1 | **901** | Standard product |

## GENERAL CHARACTERISTICS OF STG-B FILTER - FLARE CONNECTION

| Filter | Model | Part Number (multi package)[1] | Nominal Volume | | Connection | Dimensions & Weight[2] | | | | PED Category[3] (Fluid Group 2) |
|---|---|---|---|---|---|---|---|---|---|---|
| | | | | | SAE Flare | ØD | B | A | Weight | |
| | | | [inch³] | [cm³] | [inch] | [mm] | [mm] | [mm] | [g] | |
| STGB052 | STG-B05 024-901 | 10235009002 | 5 | 82 | 1/4 | 69 | 76 | 123 | 450 | Art. 4.3 |
| STGB053 | STG-B05 034-901 | 10235009102 | 5 | 82 | 3/8 | 69 | 76 | 137 | 450 | Art. 4.3 |
| STGB054 | STG-B05 044-901 | 10235009202 | 5 | 82 | 1/2 | 69 | 76 | 145 | 450 | Art. 4.3 |
| STGB082 | STG-B08 024-901 | 10235008702 | 8 | 131 | 1/4 | 69 | 98 | 145 | 580 | Art. 4.3 |
| STGB083 | STG-B08 034-901 | 10235008802 | 8 | 131 | 3/8 | 69 | 98 | 159 | 580 | Art. 4.3 |
| STGB084 | STG-B08 044-901 | 10235008902 | 8 | 131 | 1/2 | 69 | 98 | 167 | 580 | Art. 4.3 |
| STGB163 | STG-B16 034-901 | 10235009302 | 16 | 262 | 3/8 | 81 | 118 | 179 | 900 | Art. 4.3 |
| STGB164 | STG-B16 044-901 | 10235009402 | 16 | 262 | 1/2 | 81 | 118 | 187 | 900 | Art. 4.3 |
| STGB165 | STG-B16 054-901 | 10235008602 | 16 | 262 | 5/8 | 81 | 118 | 196 | 900 | Art. 4.3 |
| STGB303 | STG-B30 034-901 | 10235009502 | 30 | 492 | 3/8 | 81 | 193 | 254 | 1700 | Art. 4.3 |
| STGB304 | STG-B30 044-901 | 10235009602 | 30 | 492 | 1/2 | 81 | 193 | 262 | 1700 | Art. 4.3 |
| STGB305 | STG-B30 054-901 | 10235009702 | 30 | 492 | 5/8 | 81 | 193 | 271 | 1700 | Art. 4.3 |
| STGB306 | STG-B30 064-901 | 10235009802 | 30 | 492 | 3/4 | 81 | 193 | 271 | 1700 | Art. 4.3 |

**Note:** 1) Available also as industrial package. Contact Sanhua for more details.
2) Dimensions are rounded up to integral mm
3) PED Directive 2014/68/EU. Category evaluated considering product as a "vessel"

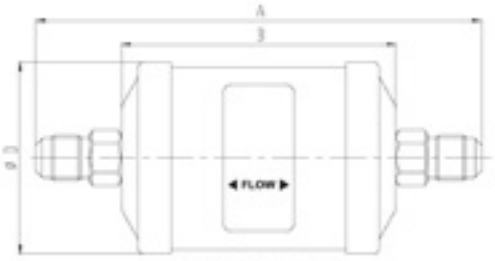

Flare Connection

# BI-FLOW FILTER DRIERS

## GENERAL CHARACTERISTICS OF STG-B FILTER - SOLDER CONNECTION

| Filter | Model [inch] | Part Number (multi package)[1] [inch] | Model [mm] | Part Number (multi package)[1] [mm] | Nominal Volume | | Connection | | Dimensions & Weight[2] | | | | PED Category[3] (Fluid Group 2) |
|---|---|---|---|---|---|---|---|---|---|---|---|---|---|
| | | | | | | | Solder | | ØD | B | A | Weight | |
| | | | | | [inch³] | [cm³] | [inch] | [mm] | [mm] | [mm] | [mm] | [g] | |
| STGB052s | STG-B05 020-901 | 10235005902 | STG-B05 061-901 | 10235007602 | 5 | 82 | 1/4 | 6 | 69 | 76 | 114 | 450 | Art. 4.3 |
| STGB053s | STG-B05 030-901 | 10235006002 | STG-B05 101-901 | 10235007802 | 5 | 82 | 3/8 | 10 | 69 | 76 | 114 | 450 | Art. 4.3 |
| STGB054s | STG-B05 040-901 | 10235006102 | STG-B05 121-901 | 10235007902 | 5 | 82 | 1/2 | 12 | 69 | 76 | 124 | 450 | Art. 4.3 |
| STGB082s | STG-B08 020-901 | 10235006202 | STG-B08 061-901 | 10235007702 | 8 | 131 | 1/4 | 6 | 69 | 98 | 136 | 580 | Art. 4.3 |
| STGB0825s | STG-B08 250-901 | 10235007402 | STG-B08 250-901 | 10235007402 | 8 | 131 | 5/16 | 8 | 69 | 98 | 136 | 580 | Art. 4.3 |
| STGB083s | STG-B08 030-901 | 10235006302 | STG-B08 101-901 | 10235008002 | 8 | 131 | 3/8 | 10 | 69 | 98 | 136 | 580 | Art. 4.3 |
| STGB084s | STG-B08 040-901 | 10235006402 | STG-B08 121-901 | 10235008102 | 8 | 131 | 1/2 | 12 | 69 | 98 | 146 | 580 | Art. 4.3 |
| STGB163s | STG-B16 030-901 | 10235006602 | STG-B16 101-901 | 10235008202 | 16 | 262 | 3/8 | 10 | 81 | 118 | 156 | 900 | Art. 4.3 |
| STGB164s | STG-B16 040-901 | 10235006502 | STG-B16 121-901 | 10235008402 | 16 | 262 | 1/2 | 12 | 81 | 118 | 166 | 900 | Art. 4.3 |
| STGB165s | STG-B16 050-901 | 10235006702 | STG-B16 050-901 | 10235006702 | 16 | 262 | 5/8 | 16 | 81 | 118 | 166 | 900 | Art. 4.3 |
| STGB167s | STG-B16 070-901 | 10235006802 | STG-B16 070-901 | 10235006802 | 16 | 262 | 7/8 | 22 | 81 | 118 | 178 | 900 | Art. 4.3 |
| STGB303s | STG-B30 030-901 | 10235006902 | STG-B30 101-901 | 10235008302 | 30 | 492 | 3/8 | 10 | 81 | 193 | 231 | 1700 | Art. 4.3 |
| STGB304s | STG-B30 040-901 | 10235007002 | STG-B30 121-901 | 10235008502 | 30 | 492 | 1/2 | 12 | 81 | 193 | 241 | 1700 | Art. 4.3 |
| STGB305s | STG-B30 050-901 | 10235007102 | STG-B30 050-901 | 10235007102 | 30 | 492 | 5/8 | 16 | 81 | 193 | 241 | 1700 | Art. 4.3 |
| STGB306s | STG-B30 060-901 | 10235007202 | - | - | 30 | 492 | 3/4 | - | 81 | 193 | 253 | 1700 | Art. 4.3 |
| STGB307s | STG-B30 070-901 | 10235007302 | STG-B30 070-901 | 10235007302 | 30 | 492 | 7/8 | 22 | 81 | 193 | 253 | 1700 | Art. 4.3 |
| STGB309s | STG-B30 090-901 | 10235007502 | STG-B30 281-901 | 10235010202 | 30 | 492 | 1 1/8 | 28 | 81 | 193 | 263 | 1700 | Art. 4.3 |

**Note:** 1) Available also as industrial package. Contact Sanhua for more details.
2) Dimensions are rounded up to integral mm
3) PED Directive 2014/68/EU. Category evaluated considering product as a "vessel"

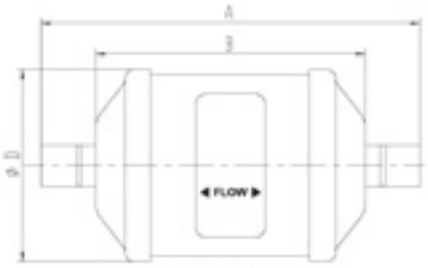

Solder Connection

# BI-FLOW FILTER DRIERS

## GENERAL CHARACTERISTICS OF STG-F FILTER - FLARE CONNECTION

| Filter | Model[1] | Part Number (multi package)[2] | Nominal Volume | | Connection | Dimensions & Weight[3] | | | | PED Category[4] (Fluid Group 2) |
|---|---|---|---|---|---|---|---|---|---|---|
| | | | | | SAE Flare | ØD | B | A | Weight | |
| | | | [inch³] | [cm³] | [inch] | [mm] | [mm] | [mm] | [g] | |
| STGF052 | STG-F05 024-901 | 10235010902 | 5 | 82 | 1/4 | 69 | 76 | 123 | 450 | Art. 4.3 |
| STGF053 | STG-F05 034-901 | 10235011002 | 5 | 82 | 3/8 | 69 | 76 | 137 | 450 | Art. 4.3 |
| STGF054 | STG-F05 044-901 | 10235011102 | 5 | 82 | 1/2 | 69 | 76 | 145 | 450 | Art. 4.3 |
| STGF082 | STG-F08 024-901 | 10235011902 | 8 | 131 | 1/4 | 69 | 98 | 145 | 580 | Art. 4.3 |
| STGF083 | STG-F08 034-901 | 10235012002 | 8 | 131 | 3/8 | 69 | 98 | 159 | 580 | Art. 4.3 |
| STGF084 | STG-F08 044-901 | 10235012102 | 8 | 131 | 1/2 | 69 | 98 | 167 | 580 | Art. 4.3 |
| STGF163 | STG-F16 034-901 | 10235014902 | 16 | 262 | 3/8 | 81 | 118 | 179 | 900 | Art. 4.3 |
| STGF164 | STG-F16 044-901 | 10235015002 | 16 | 262 | 1/2 | 81 | 118 | 187 | 900 | Art. 4.3 |
| STGF165 | STG-F16 054-901 | 10235015102 | 16 | 262 | 5/8 | 81 | 118 | 196 | 900 | Art. 4.3 |
| STGF303 | STG-F30 034-901 | 10235013802 | 30 | 492 | 3/8 | 81 | 193 | 254 | 1700 | Art. 4.3 |
| STGF304 | STG-F30 044-901 | 10235013502 | 30 | 492 | 1/2 | 81 | 193 | 262 | 1700 | Art. 4.3 |
| STGF305 | STG-F30 054-901 | 10235013602 | 30 | 492 | 5/8 | 81 | 193 | 271 | 1700 | Art. 4.3 |
| STGF306 | STG-F30 064-901 | 10235013702 | 30 | 492 | 3/4 | 81 | 193 | 271 | 1700 | Art. 4.3 |

**Note:**
1) Delivery time on request
2) Available also as industrial package. Contact Sanhua for more details
3) Dimensions are rounded up to integral mm
4) PED Directive 2014/68/EU. Category evaluated considering product as a "vessel"

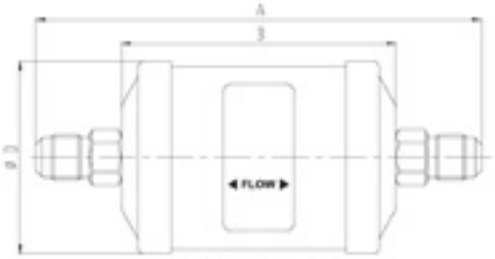


Flare Connection

# BI-FLOW FILTER DRIERS

## GENERAL CHARACTERISTICS OF STG-F FILTER - SOLDER CONNECTION

| Filter | Model[1] [inch] | Part Number (multi package)[2] [inch] | Model[1] [mm] | Part Number (multi package)[3] [mm] | Nominal Volumen | | Connection | | Dimensions & Weight[3] | | | | PED Category[4] (Fluid Group 2) |
|---|---|---|---|---|---|---|---|---|---|---|---|---|---|
| | | | | | | | Solder | | ØD | B | A | Weight | |
| | | | | | [inch³] | [cm³] | [inch] | [mm] | [mm] | [mm] | [mm] | [g] | |
| STGF052s | STG-F05 020-901 | 10235010302 | STG-F05 061-901 | 10235010602 | 5 | 82 | 1/4 | 6 | 69 | 76 | 114 | 450 | Art. 4.3 |
| STGF053s | STG-F05 030-901 | 10235010402 | STG-F05 101-901 | 10235010702 | 5 | 82 | 3/8 | 10 | 69 | 76 | 114 | 450 | Art. 4.3 |
| STGF054s | STG-F05 040-901 | 10235010502 | STG-F05 121-901 | 10235010802 | 5 | 82 | 1/2 | 12 | 69 | 76 | 124 | 450 | Art. 4.3 |
| STGF082s | STG-F08 020-901 | 10235011202 | STG-F08 061-901 | 10235011602 | 8 | 131 | 1/4 | 6 | 69 | 98 | 136 | 580 | Art. 4.3 |
| STGF0825s | STG-F08 250-901 | 10235011302 | STG-F08 250-901 | 10235011302 | 8 | 131 | 5/16 | 8 | 69 | 98 | 136 | 580 | Art. 4.3 |
| STGF083s | STG-F08 030-901 | 10235011402 | STG-F08 101-901 | 10235011702 | 8 | 131 | 3/8 | 10 | 69 | 98 | 136 | 580 | Art. 4.3 |
| STGF084s | STG-F08 040-901 | 10235011502 | STG-F08 121-901 | 10235011802 | 8 | 131 | 1/2 | 12 | 69 | 98 | 146 | 580 | Art. 4.3 |
| STGF163s | STG-F16 030-901 | 10235012202 | STG-F16 101-901 | 10235012602 | 16 | 262 | 3/8 | 10 | 81 | 118 | 156 | 900 | Art. 4.3 |
| STGF164s | STG-F16 040-901 | 10235012302 | STG-F16 121-901 | 10235012702 | 16 | 262 | 1/2 | 12 | 81 | 118 | 166 | 900 | Art. 4.3 |
| STGF165s | STG-F16 050-901 | 10235012402 | STG-F16 050-901 | 10235012402 | 16 | 262 | 5/8 | 16 | 81 | 118 | 166 | 900 | Art. 4.3 |
| STGF167s | STG-F16 070-901 | 10235012502 | STG-F16 070-901 | 10235012502 | 16 | 262 | 7/8 | 22 | 81 | 118 | 178 | 900 | Art. 4.3 |
| STGF303s | STG-F30 030-901 | 10235013902 | STG-F30 101-901 | 10235013102 | 30 | 492 | 3/8 | 10 | 81 | 193 | 231 | 1700 | Art. 4.3 |
| STGF304s | STG-F30 040-901 | 10235014002 | STG-F30 121-901 | 10235013202 | 30 | 492 | 1/2 | 12 | 81 | 193 | 241 | 1700 | Art. 4.3 |
| STGF305s | STG-F30 050-901 | 10235014102 | STG-F30 050-901 | 10235014102 | 30 | 492 | 5/8 | 16 | 81 | 193 | 241 | 1700 | Art. 4.3 |
| STGF306s | STG-F30 060-901 | 10235014202 | - | - | 30 | 492 | 3/4 | - | 81 | 193 | 253 | 1700 | Art. 4.3 |
| STGF307s | STG-F30 070-901 | 10235012902 | STG-F30 070-901 | 10235012902 | 30 | 492 | 7/8 | 22 | 81 | 193 | 253 | 1700 | Art. 4.3 |
| STGF309s | STG-F30 090-901 | 10235013002 | STG-F30 281-901 | 10235013402 | 30 | 492 | 1 1/8 | 28 | 81 | 193 | 263 | 1700 | Art. 4.3 |

**Note:**
1) Delivery time on request
2) Available also as industrial package. Contact Sanhua for more details.
3) Dimensions are rounded up to integral mm
4) PED Directive 2014/68/EU. Category evaluated considering product as a "vessel"

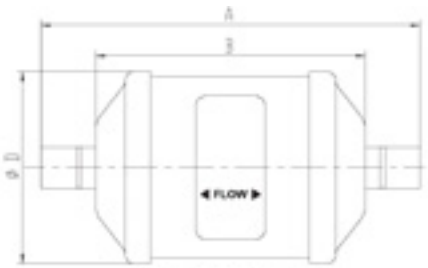


Solder Connection

# BI-FLOW FILTER DRIERS

## SELECTION TABLE

| Model | Capacity [ kW ] 1) 3) | | | | | Moisture Absorption (gram $H_2O$) | | | | | | | |
|---|---|---|---|---|---|---|---|---|---|---|---|---|---|
| | R134a | R404A / R507A | R22 | R407C 2 | R410A | R134a | | R404A / R507A | | R407C 2 / R410A | | R22 | |
| | | | | | | 75°F | 125°F | 75°F | 125°F | 75°F | 125°F | 75°F | 125°F |
| | | | | | | 23,9°C | 51,7°C | 23,9°C | 51,7°C | 23,9°C | 51,7°C | 23,9°C | 51,7°C |
| STGB052 | 7,4 | 5,3 | 7,7 | 7,7 | 7,7 | 4,3 | 4,0 | 4,1 | 3,8 | 3,7 | 3,4 | 4,1 | 3,7 |
| STGB053 | 16,5 | 11,6 | 16,9 | 16,5 | 16,9 | 4,3 | 4,0 | 4,1 | 3,8 | 3,7 | 3,4 | 4,1 | 3,7 |
| STGB054 | 25,0 | 17,6 | 25,3 | 25,0 | 25,3 | 4,3 | 4,0 | 4,1 | 3,8 | 3,7 | 3,4 | 4,1 | 3,7 |
| STGB082 | 8,8 | 6,0 | 8,8 | 8,8 | 8,8 | 9,8 | 9,0 | 9,2 | 8,6 | 8,5 | 7,8 | 9,2 | 8,5 |
| STGB0825 | 15,8 | 10,9 | 16,2 | 15,8 | 16,2 | 9,8 | 9,0 | 9,2 | 8,6 | 8,5 | 7,8 | 9,2 | 8,5 |
| STGB083 | 17,2 | 12,0 | 17,6 | 17,2 | 17,6 | 9,8 | 9,0 | 9,2 | 8,6 | 8,5 | 7,8 | 9,2 | 8,5 |
| STGB084 | 25,7 | 17,9 | 26,4 | 26,0 | 26,4 | 9,8 | 9,0 | 9,2 | 8,6 | 8,5 | 7,8 | 9,2 | 8,5 |
| STGB163 | 19,7 | 13,7 | 20,0 | 19,7 | 20,0 | 17,6 | 16,3 | 16,6 | 15,5 | 15,2 | 14,0 | 16,6 | 14,2 |
| STGB164 | 30,2 | 21,5 | 30,9 | 30,6 | 30,9 | 17,6 | 16,3 | 16,6 | 15,5 | 15,2 | 14,0 | 16,6 | 14,2 |
| STGB165 | 34,1 | 23,9 | 34,8 | 34,5 | 35,2 | 17,6 | 16,3 | 16,6 | 15,5 | 15,2 | 14,0 | 16,6 | 14,2 |
| STGB167 | 42,2 | 29,9 | 42,9 | 42,6 | 43,3 | 17,6 | 16,3 | 16,6 | 15,5 | 15,2 | 14,0 | 16,6 | 14,2 |
| STGB303 | 25,0 | 17,6 | 25,3 | 25,0 | 25,7 | 41,3 | 38,4 | 38,9 | 36,5 | 35,9 | 32,9 | 39,1 | 33,1 |
| STGB304 | 30,9 | 21,8 | 31,7 | 31,7 | 32,0 | 41,3 | 38,4 | 38,9 | 36,5 | 35,9 | 32,9 | 39,1 | 33,1 |
| STGB305 | 35,5 | 25,0 | 36,2 | 35,9 | 36,6 | 41,3 | 38,4 | 38,9 | 36,5 | 35,9 | 32,9 | 39,1 | 33,1 |
| STGB306 | 39,6 | 28,1 | 40,1 | 39,7 | 40,4 | 41,3 | 38,4 | 38,9 | 36,5 | 35,9 | 32,9 | 39,1 | 33,1 |
| STGB307 | 46,4 | 32,4 | 47,1 | 46,8 | 47,5 | 41,3 | 38,4 | 38,9 | 36,5 | 35,9 | 32,9 | 39,1 | 33,1 |
| STGB309 | 54,2 | 38,0 | 55,2 | 54,5 | 55,6 | 41,3 | 38,4 | 38,9 | 36,5 | 35,9 | 32,9 | 39,1 | 33,1 |

**Note:**
1) The above data is based on filter driers with inch connections and clean system at ideal conditions; with impurities accumulated in the filter, the capacity may decrease.
2) R407C data based on dew point conditions
3) given capacity is for all available types of connection for the same model: flare/solder [inch] and equivalent solder [mm]

# BI-FLOW FILTER DRIERS

## SELECTION TABLE

| Model | Capacity[1) 2)] [kW] | | | | | | |
|---|---|---|---|---|---|---|---|
| | R407A | R407F | R448A | R449A | R452A | R450A | R513A |
| STGB052 | 7.1 | 7.85 | 7.15 | 7.05 | 5.4 | 6.85 | 6.15 |
| STGB053 | 15.9 | 17.5 | 15.9 | 15.7 | 12.1 | 16.5 | 13.7 |
| STGB054 | 24 | 26.5 | 24.1 | 23.8 | 18.3 | 23.3 | 20.8 |
| STGB082 | 8.45 | 9.3 | 8.5 | 8.35 | 6.45 | 8.2 | 7.3 |
| STGB0825 | 15.2 | 16.7 | 15.2 | 15 | 11.55 | 14.7 | 13.1 |
| STGB083 | 16.5 | 18.2 | 16.6 | 16.4 | 12.6 | 16 | 14.3 |
| STGB084 | 24.7 | 27.3 | 24.7 | 24.5 | 18.8 | 23.8 | 21.4 |
| STGB163 | 19 | 20.8 | 19 | 18.7 | 14.4 | 18.3 | 16.4 |
| STGB164 | 29 | 32 | 29 | 28.7 | 22.1 | 28 | 25 |
| STGB165 | 32.7 | 36 | 32.8 | 32.5 | 25 | 31.6 | 28.4 |
| STGB167 | 40.6 | 44.6 | 40.6 | 40.2 | 30.8 | 39.2 | 35 |
| STGB303 | 24 | 26.4 | 24.1 | 23.8 | 18.3 | 23.3 | 20.7 |
| STGB304 | 29.7 | 32.7 | 29.7 | 29.4 | 22.6 | 28.7 | 25.6 |
| STGB305 | 34.2 | 37.5 | 34.2 | 33.8 | 26 | 33 | 29.5 |
| STGB306 | 38 | 42 | 38.2 | 37.8 | 29 | 36.8 | 33 |
| STGB307 | 44.6 | 49 | 44.6 | 44 | 34 | 43 | 38.6 |
| STGB309 | 52 | 57.5 | 52.4 | 51.7 | 39.6 | 50.2 | 45 |

**Note:** 1) the above data is based on clean system at ideal conditions: with impurities accumulated in the filter, the capacity may decrease
2) given capacity is for all available types of connection for the same model: flare/solder [inch] and equivalent solder [mm]

## SELECTION FORMULAS

Filter driers for liquid line are manufactured in compliance with ARI Standard 710. Maximum flow rate of liquid refrigerant at a differential pressure of 0,07bar (1psi) is indicated by kW (ton) which is based on the temperature of liquid refrigerant 30°C (86°F), the evaporating temperature of -15°C (5°F) and the following mass flow:

- 0,40 kg/min/kW (3.1 lb/min/ton) R134a
- 0,53 kg/min/kW (4.1 lb/min/ton) R404A, R507A
- 0,39 kg/min/kW (3.0 lb/min/ton) R22, R407C
- 0,36 kg/min/kW (2.8 lb/min/ton) R410A

**Note:** Data on water absorption is based on the following EPD (method: ASHRAE Standard 63.1):

- 60ppm R22
- 50ppm R134a
- 50ppm R404A
- 50ppm R407C
- 50ppm R410A
- 50ppm R507A

***STG*** *SERIES*

# BI-FLOW FILTER DRIERS

(GreenTech range: for fluids GROUP 1 according to Directive 2014/68/EU or GROUP A3/A2L according to ANSI-ASHRAE 34-2016)

## FEATURES

- HIGH EFFICIENT IN MOISTURE ABSORPTION, FILTERING IMPURITY, ACID, PAINT REMAINS AND MUD REMOVAL
- HYBRID DESICCANT
- DURABLE AND SOLID FILTER CORES
- FILTERING FINENESS: 20μm
- CORROSION RESISTANT PAINTING CAN SURVIVE SALT SPRAY TEST OF 500 HOURS
- CONNECTION TYPE: SOLDER

### GENERAL SPECIFICATIONS

- Applicable for HC, HFC, HFO refrigerants such as: R290, R1234ze(E), R1234yf, R447A, R452B, R454B, R454C
- Ambient temperature min./max.: -30°C / +70°C
- Medium temperature TS min./max.: -30°C / +120°C
- Max. operating pressure PS: 4,83 MPa (48,3 bar)
- Installation position: preferably installed in liquid line
- Certifications: UL/CSA and PED declaration (all products have been covered by Art.4.3 PED Directive 2014/68/EU)

### TECHNICAL PARAMETERS *Desiccant Selection Table*

| | Medium Type | 80% 3Å Desiccant and 20% Active Alumina | 100% 3Å Desiccant |
|---|---|---|---|
| Refrigerant | HFC | Applicable | Applicable |
| | HCFC | Applicable | Applicable |
| | HFO | Applicable | Applicable |
| Oil[1)] | Mineral oil or AB | Applicable | Applicable |
| | Pure POE or PAG | Applicable | Applicable |
| | POE or PAG with additive | Not Applicable | Applicable |

**Note:** 1) When the systems use oil with additive, it is not recommended to use a core with alumina

# BI-FLOW FILTER DRIERS

*Model Designation Legend*

| | | | |
|---|---|---|---|
| **1** | **Product Code** | **Filter Drier Series** | |
| | STG | Indicates bidirectional filter drier | |
| **2** | **Filter Core** | **Structure and Material** | |
| | B | Solid core, 100%3Å desiccant | |
| | F | Solid core, 80% 3Å desiccant and 20% active alumina | |
| **3** | **Internal Volume** | **Expressed in [ inch³ ]** | **Expressed in [ cm³ ]** |
| | 05 | 5 | 82 |
| | 08 | 8 | 131 |
| | 16 | 16 | 262 |
| | 30 | 30 | 492 |
| **4** | **Connection Size** | **Pos. 5 shows "0": Solder [inch]** | |
| | 02 | 1/4 | |
| | 25 | 5/16 | |
| | 03 | 3/8 | |
| | 04 | 1/2 | |
| | 05 | 5/8 | |
| | 06 | 3/4 | |
| | 07 | 7/8 | |
| | 09 | 1 1/8 | |
| | **Connection Size** | **Pos. 5 shows "1": Solder [mm]** | |
| | 06 | 6 | |
| | (08) * | (5/16" version can be used e.g. STG-B08 **25**0) | |
| | 10 | 10 | |
| | 12 | 12 | |
| | (16) * | (5/8" version can be used e.g. STG-B16 **05**0) | |
| | (22) * | (7/8" version can be used e.g. STG-B16 **07**0) | |
| | 28 | 28 | |
| **5** | **Pipe Connection** | **Type** | |
| | 0 | Solder with inch connections | |
| | 1 * | Solder with metric connections | |
| **6** | **Version Number** | **Description** | |
| | 901 | Standard product | |

**Note:** * Solder connections which fit to metric and inch are marked with inch product codes e.g. 8, 16 and 22 mm.

# BI-FLOW FILTER DRIERS

## MODEL DESIGNATION EXAMPLE

| Position Number | | | | | | According to Model Designation Legend |
|---|---|---|---|---|---|---|
| 1 | 2 | 3 | 4 | 5 | 6 | |
| **STG** | B | 05 | 06 | 1 | 901 | Bidirectional filter drier |
| STG | **B** | 05 | 06 | 1 | 901 | Solid filter core with 100% 3Å desiccant |
| STG | B | **05** | 06 | 1 | 901 | 3 inch³ internal volume |
| STG | B | 05 | **06** | 1 | 901 | When Pos. 5 is "1": connection size 6mm |
| STG | B | 05 | 06 | **1** | 901 | Solder connection metric |
| STG | B | 05 | 06 | 1 | **901** | Standard product |

## GENERAL CHARACTERISTICS OF STG-B FILTER - SOLDER CONNECTION

| Filter | Model [inch] | Part Number (multi package)[1] [inch] | Model [mm] | Part Number (multi package)[1] [mm] | Nominal Volume | | Connection | | Dimensions & Weight[2] | | | | PED Category[3] (Fluid Group 1) |
|---|---|---|---|---|---|---|---|---|---|---|---|---|---|
| | | | | | | | Solder | | ØD | B | A | Weight | |
| | | | | | [inch³] | [cm³] | [inch] | [mm] | [mm] | [mm] | [mm] | [g] | |
| STGB052s | STG-B05 020-901 | 10235005902 | STG-B05 061-901 | 10235007602 | 5 | 82 | 1/4 | 6 | 69 | 76 | 114 | 450 | Art. 4.3 |
| STGB053s | STG-B05 030-901 | 10235006002 | STG-B05 101-901 | 10235007802 | 5 | 82 | 3/8 | 10 | 69 | 76 | 114 | 450 | Art. 4.3 |
| STGB054s | STG-B05 040-901 | 10235006102 | STG-B05 121-901 | 10235007902 | 5 | 82 | 1/2 | 12 | 69 | 76 | 124 | 450 | Art. 4.3 |
| STGB082s | STG-B08 020-901 | 10235006202 | STG-B08 061-901 | 10235007702 | 8 | 131 | 1/4 | 6 | 69 | 98 | 136 | 580 | Art. 4.3 |
| STGB0825s | STG-B08 250-901 | 10235007402 | STG-B08 250-901 | 10235007402 | 8 | 131 | 5/16 | 8 | 69 | 98 | 136 | 580 | Art. 4.3 |
| STGB083s | STG-B08 030-901 | 10235006302 | STG-B08 101-901 | 10235008002 | 8 | 131 | 3/8 | 10 | 69 | 98 | 136 | 580 | Art. 4.3 |
| STGB084s | STG-B08 040-901 | 10235006402 | STG-B08 121-901 | 10235008102 | 8 | 131 | 1/2 | 12 | 69 | 98 | 146 | 580 | Art. 4.3 |
| STGB163s | STG-B16 030-901 | 10235006602 | STG-B16 101-901 | 10235008202 | 16 | 262 | 3/8 | 10 | 81 | 118 | 156 | 900 | Art. 4.3 |
| STGB164s | STG-B16 040-901 | 10235006502 | STG-B16 121-901 | 10235008402 | 16 | 262 | 1/2 | 12 | 81 | 118 | 166 | 900 | Art. 4.3 |
| STGB165s | STG-B16 050-901 | 10235006702 | STG-B16 050-901 | 10235006702 | 16 | 262 | 5/8 | 16 | 81 | 118 | 166 | 900 | Art. 4.3 |
| STGB167s | STG-B16 070-901 | 10235006802 | STG-B16 070-901 | 10235006802 | 16 | 262 | 7/8 | 22 | 81 | 118 | 178 | 900 | Art. 4.3 |
| STGB303s | STG-B30 030-901 | 10235006902 | STG-B30 101-901 | 10235008302 | 30 | 492 | 3/8 | 10 | 81 | 193 | 231 | 1700 | Art. 4.3 |
| STGB304s | STG-B30 040-901 | 10235007002 | STG-B30 121-901 | 10235008502 | 30 | 492 | 1/2 | 12 | 81 | 193 | 241 | 1700 | Art. 4.3 |
| STGB305s | STG-B30 050-901 | 10235007102 | STG-B30 050-901 | 10235007102 | 30 | 492 | 5/8 | 16 | 81 | 193 | 241 | 1700 | Art. 4.3 |
| STGB306s | STG-B30 060-901 | 10235007202 | - | - | 30 | 492 | 3/4 | - | 81 | 193 | 253 | 1700 | Art. 4.3 |
| STGB307s | STG-B30 070-901 | 10235007302 | STG-B30 070-901 | 10235007302 | 30 | 492 | 7/8 | 22 | 81 | 193 | 253 | 1700 | Art. 4.3 |
| STGB309s | STG-B30 090-901 | 10235007502 | STG-B30 281-901 | 10235010202 | 30 | 492 | 1 1/8 | 28 | 81 | 193 | 263 | 1700 | Art. 4.3 |

**Note:** 1) Available also as industrial package. Contact Sanhua for more details.
2) Dimensions are rounded up to integral mm
3) PED Directive 2014/68/EU. Category evaluated considering product as a "vessel"

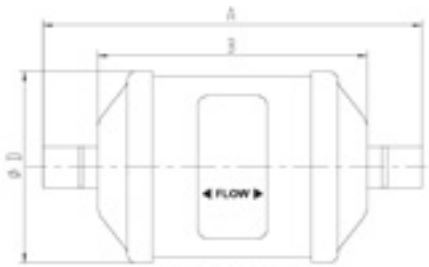


Solder Connection

# BI-FLOW FILTER DRIERS

## GENERAL CHARACTERISTICS OF STG-F FILTER - SOLDER CONNECTION

| Filter | Model[1] [inch] | Part Number (multi package)[2] [inch] | Model[1] [mm] | Part Number (multi package)[2] [mm] | Nominal Volumen | | Connection | | Dimensions & Weight[3] | | | | PED Category[4] (Fluid Group 1) |
|---|---|---|---|---|---|---|---|---|---|---|---|---|---|
| | | | | | | | Solder | | ØD | B | A | Weight | |
| | | | | | [inch³] | [cm³] | [inch] | [mm] | [mm] | [mm] | [mm] | [g] | |
| STGF052s | STG-F05 020-901 | 10235010302 | STG-F05 061-901 | 10235010602 | 5 | 82 | 1/4 | 6 | 69 | 76 | 114 | 450 | Art. 4.3 |
| STGF053s | STG-F05 030-901 | 10235010402 | STG-F05 101-901 | 10235010702 | 5 | 82 | 3/8 | 10 | 69 | 76 | 114 | 450 | Art. 4.3 |
| STGF054s | STG-F05 040-901 | 10235010502 | STG-F05 121-901 | 10235010802 | 5 | 82 | 1/2 | 12 | 69 | 76 | 124 | 450 | Art. 4.3 |
| STGF082s | STG-F08 020-901 | 10235011202 | STG-F08 061-901 | 10235011602 | 8 | 131 | 1/4 | 6 | 69 | 98 | 136 | 580 | Art. 4.3 |
| STGF0825s | STG-F08 250-901 | 10235011302 | STG-F08 250-901 | 10235011302 | 8 | 131 | 5/16 | 8 | 69 | 98 | 136 | 580 | Art. 4.3 |
| STGF083s | STG-F08 030-901 | 10235011402 | STG-F08 101-901 | 10235011702 | 8 | 131 | 3/8 | 10 | 69 | 98 | 136 | 580 | Art. 4.3 |
| STGF084s | STG-F08 040-901 | 10235011502 | STG-F08 121-901 | 10235011802 | 8 | 131 | 1/2 | 12 | 69 | 98 | 146 | 580 | Art. 4.3 |
| STGF163s | STG-F16 030-901 | 10235012202 | STG-F16 101-901 | 10235012602 | 16 | 262 | 3/8 | 10 | 81 | 118 | 156 | 900 | Art. 4.3 |
| STGF164s | STG-F16 040-901 | 10235012302 | STG-F16 121-901 | 10235012702 | 16 | 262 | 1/2 | 12 | 81 | 118 | 166 | 900 | Art. 4.3 |
| STGF165s | STG-F16 050-901 | 10235012402 | STG-F16 050-901 | 10235012402 | 16 | 262 | 5/8 | 16 | 81 | 118 | 166 | 900 | Art. 4.3 |
| STGF167s | STG-F16 070-901 | 10235012502 | STG-F16 070-901 | 10235012502 | 16 | 262 | 7/8 | 22 | 81 | 118 | 178 | 900 | Art. 4.3 |
| STGF303s | STG-F30 030-901 | 10235013902 | STG-F30 101-901 | 10235013102 | 30 | 492 | 3/8 | 10 | 81 | 193 | 231 | 1700 | Art. 4.3 |
| STGF304s | STG-F30 040-901 | 10235014002 | STG-F30 121-901 | 10235013202 | 30 | 492 | 1/2 | 12 | 81 | 193 | 241 | 1700 | Art. 4.3 |
| STGF305s | STG-F30 050-901 | 10235014102 | STG-F30 050-901 | 10235014102 | 30 | 492 | 5/8 | 16 | 81 | 193 | 241 | 1700 | Art. 4.3 |
| STGF306s | STG-F30 060-901 | 10235014202 | - | - | 30 | 492 | 3/4 | - | 81 | 193 | 253 | 1700 | Art. 4.3 |
| STGF307s | STG-F30 070-901 | 10235012902 | STG-F30 070-901 | 10235012902 | 30 | 492 | 7/8 | 22 | 81 | 193 | 253 | 1700 | Art. 4.3 |
| STGF309s | STG-F30 090-901 | 10235013002 | STG-F30 281-901 | 10235013402 | 30 | 492 | 1 1/8 | 28 | 81 | 193 | 263 | 1700 | Art. 4.3 |

**Note:** 1) Delivery time on request
2) Available also as industrial package. Contact Sanhua for more details
3) Dimensions are rounded up to integral mm
4) PED Directive 2014/68/EU. Category evaluated considering product as a "vessel"

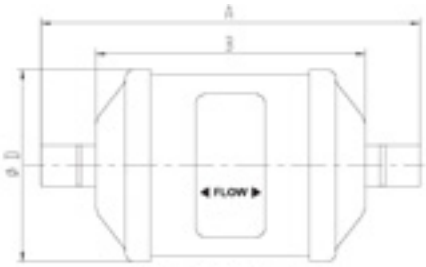

Solder Connection

# BI-FLOW FILTER DRIERS

## SELECTION TABLE

| Model | Capacity[1) 2)] [kW] | | |
|---|---|---|---|
| | R290 | R1234yf | R1234ze(E) |
| STGB052s | 9 | 5.45 | 6.6 |
| STGB053s | 20.1 | 12.1 | 14.7 |
| STGB054s | 30.4 | 18.4 | 22.3 |
| STGB082s | 10.7 | 6.45 | 7.85 |
| STGB0825s | 19.2 | 11.6 | 14.1 |
| STGB083s | 21 | 12.6 | 15.3 |
| STGB084s | 31.2 | 18.85 | 23 |
| STGB163s | 24 | 14.5 | 17.6 |
| STGB164s | 36.8 | 22.2 | 27 |
| STGB165s | 41.6 | 25 | 30.4 |
| STGB167s | 51.4 | 31 | 37.6 |
| STGB303s | 30.4 | 18.4 | 22.3 |
| STGB304s | 37.6 | 22.7 | 27.5 |
| STGB305s | 43.2 | 26 | 31.6 |
| STGB306s | 48.3 | 29 | 35.2 |
| STGB307s | 56.6 | 34 | 41.4 |
| STGB309s | 66 | 39.8 | 48.3 |

## SELECTION TABLE

| Model | Capacity[1) 2)] [kW] | | |
|---|---|---|---|
| | R290 | R1234yf | R1234ze(E) |
| STGF052s | 9 | 5.45 | 6.6 |
| STGF053s | 20.1 | 12.1 | 14.7 |
| STGF054s | 30.4 | 18.4 | 22.3 |
| STGF082s | 10.7 | 6.45 | 7.85 |
| STGF0825s | 19.2 | 11.6 | 14.1 |
| STGF083s | 21 | 12.6 | 15.3 |
| STGF084s | 31.2 | 18.85 | 23 |
| STGF163s | 24 | 14.5 | 17.6 |
| STGF164s | 36.8 | 22.2 | 27 |
| STGF165s | 41.6 | 25 | 30.4 |
| STGF167s | 51.4 | 31 | 37.6 |
| STGF303s | 30.4 | 18.4 | 22.3 |
| STGF304s | 37.6 | 22.7 | 27.5 |
| STGF305s | 43.2 | 26 | 31.6 |
| STGF306s | 48.3 | 29 | 35.2 |
| STGF307s | 56.6 | 34 | 41.4 |
| STGF309s | 66 | 39.8 | 48.3 |

**Note:** 1) the above data is based on clean system at ideal conditions; with impurities, accumulated in the filter, the capacity may decrease
2) given capacity is for all available types of connection for the same model: solder [inch] and equivalent solder [mm]

## SELECTION FORMULAS

Filter Driers for liquid line are manufactured in compliance with ARI Standard 710. Flow rate of liquid refrigerant at a differential pressure of 0,07bar (1psi) is indicated by kW which is based on the temperature of liquid refrigerant 30°C (86°F), the evaporating temperature of refrigerant is -15°C (5°F).

# SANHUA

**SANHUA** INTERNATIONAL
**info@sanhuaeurope.com**

## Technical information
## sanhuaeurope.com

**DOWNLOAD NOW**
*OUR ONLINE*
**CATALOGUE**

Certificate of registration
ISO 14001:2004

Certificate of registration
ISO 9001:2008

REACH
NR. 1907/2006
CONFORMITY DECLARATION

**BEST SUPPLIER AWARDS**

B/S/H/ Carrier TRANE

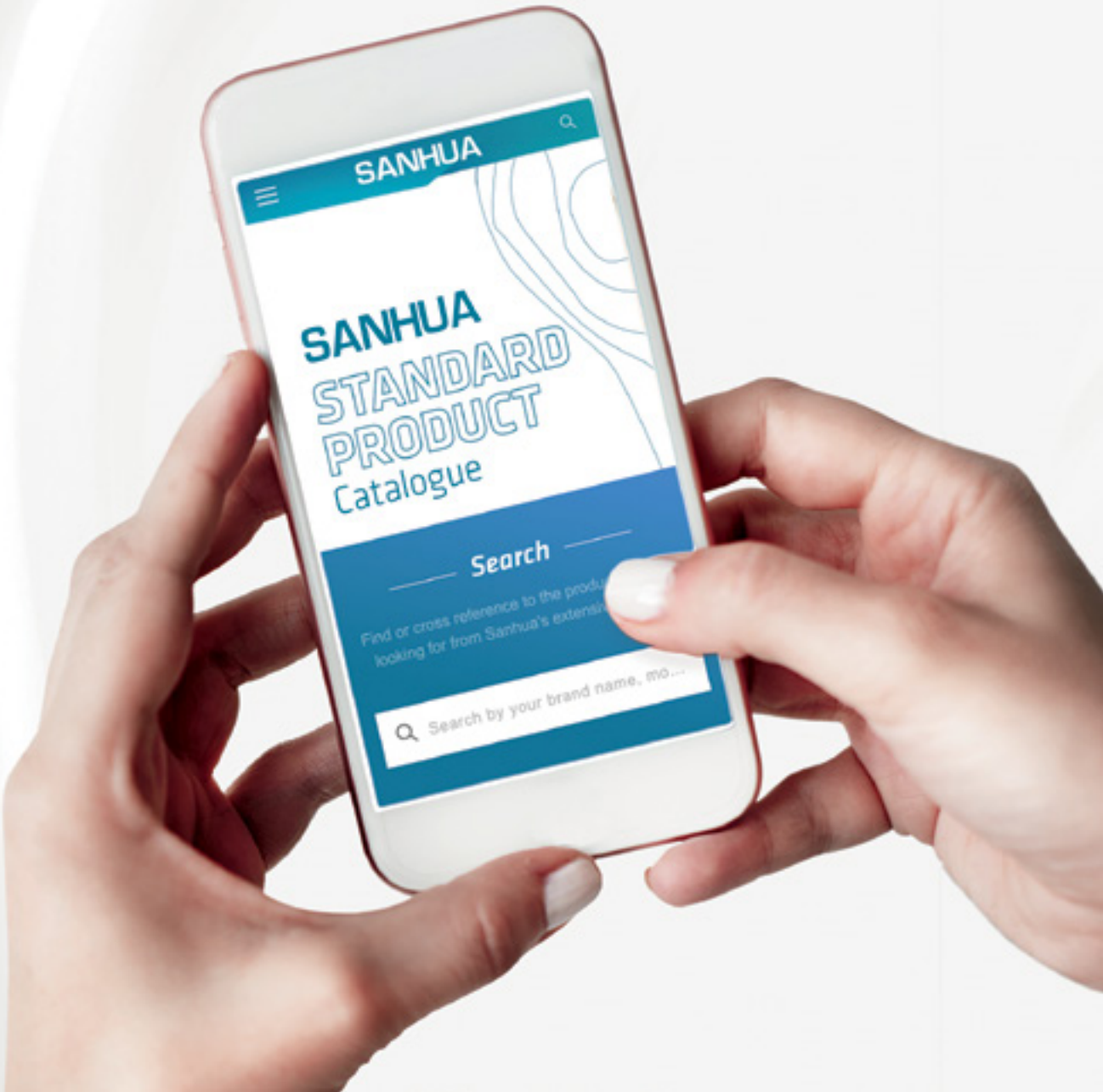

***HTG*** *SERIES*

# FILTER DRIERS WITH REPLACEABLE CORE

The filter driers with replaceable core (HTG series) are used in liquid line and suction line of refrigerating, freezing and air conditioning system. The filter housing allows to choose different kinds of cores. It's sealed by bottom cover for an easy removal and replacement of core from the bottom. The core holder requires minimum free space to remove the core for replacement.

## FEATURES

- HIGH EFFICIENT IN MOISTURE ABSORPTION, FILTERING IMPURITY, ACID, PAINT REMAINS AND MUD REMOVAL
- DIFFERENT TYPES OF FILTER CORES
- DURABLE AND SOLID FILTER CORES
- FILTERING FINENESS: 20μm
- CORROSION RESISTANT PAINTING CAN SURVIVE SALT SPRAY TEST OF 500 HOURS
- CONNECTION TYPE: SOLDER

## FEATURES OF FILTER ELEMENT

- **SH48-A80 FILTER ELEMENT:**
  80% 3A DESICCANT AND 20% ACTIVATED ALUMINA,
  It provides a good desiccation ability and an acid absorption capability in a wide temperature range. The core resistance is guaranteed with high level of vibration thanks to an anti-shock design. Suggested installation position on liquid line
- **SH48-A00 FILTER ELEMENT:**
  100% 3A DESICCANT
  It provides the maximum level of desiccation ability in a wide temperature range. The core resistance is guaranteed with high level of vibration thanks to an anti-shock design. Suggested installation position on liquid line
- **SH48-A30 FILTER ELEMENT:**
  30% 3A DESICCANT, 70% ACTIVATED ALUMINA
  This solid filter element provides an excellent acid absorption together with a standard desiccation ability in a wide temperature range. The suggested installation position is on the suction line; it is suitable after compressor burnout because it removes acid, impurities and other harmful substance avoiding the damage of the new compressor.
  SH48-A30 filter core is compatible with HCFC / HFC refrigerants and its design optimizes the flow passage generating low internal pressure drop. The core resistance is guaranteed with high level of vibration thanks to an anti-shock design.
- **SH48-B00 FILTER ELEMENT:**
  Strainer core for filtering dirt particles. Compatible with HCFC, HFC refrigerants. Suggested installation position on suction line.

# FILTER DRIERS WITH REPLACEABLE CORE

## GENERAL SPECIFICATION

- Applicable for all common HCFC and HFC, HFO[1)] refrigerants such as: R22, R134a, R404A, R407C, R410A, R507, R407A/F, R448A/R449A, R452A, R450A/R513A, R1234ze[1)].
- Ambient temperature min./max.: -30°C / +55°C
- Medium temperature TS min./max.: -40°C / +70°C
- Max. operating pressure PS: from 4,5 MPa (45 bar) (see table 1)
- Installation position:
  HTG with SH48-A80 or SH48-A00 in liquid line,
  HTG with SH48-A30 or mechanical strainer SH48-B100 in suction line
- Certifications: UL/CSA and PED declaration

**Note:** 1) Please contact Sanhua representative regarding applications with HFO
For liquid capacity of filters with R407A/F, R1234ze, R448A/R449A, R452A, R450A/R513A please contact Sanhua.

## TECHNICAL PARAMETERS

*Desiccant Selection Table*

| | Medium Type | 30% 3A desiccant 70% active alumina | 80% 3A desiccant 20% active alumina | 100% 3A desiccant | Mechanical strainer |
|---|---|---|---|---|---|
| Core Model | - | SH48-A30 | SH48-A80 | SH48-A00 | SH48-B00 |
| With flange gasket suitable for Sanhua shells: Ø115 mm x Ø121,4 mm | - | 20225000102 | 20225000902 | 20225001102 | 20225003302 |
| With flange gasket suitable for Sanhua and other shells: Ø115 mm x Ø121,4 mm and Ø105,6 mm x Ø115 mm | - | 20225028602 | 20225027702 | 20225028502 | 20225028702 |
| Suggested Installation position | - | Suction Line | Liquid Line | Liquid Line | Suction Line |
| Refrigerant | HFC | Applicable | Applicable | Suggested | Suggested |
| | HCFC | Suggested | Suggested | Applicable | Applicable |
| | HC/HFO | Applicable | Applicable | Applicable | - |
| Oil [1)] | Mineral oil or AB | Suggested | Suggested | Applicable | Applicable |
| | Pure POE or PAG | Applicable | Applicable | Suggested | Suggested |
| | POE or PAG with addictive | Not applicable | Not applicable | Applicable | Applicable |

**Note:** 1) When the systems use oil with additive, it is not recommended to use a core with alumina.

*Accessories and spare parts:*

| Universal flange gaskets set | Model | Part Number (multi package) |
|---|---|---|
| | HTG-000-024003 | 20225023802 |

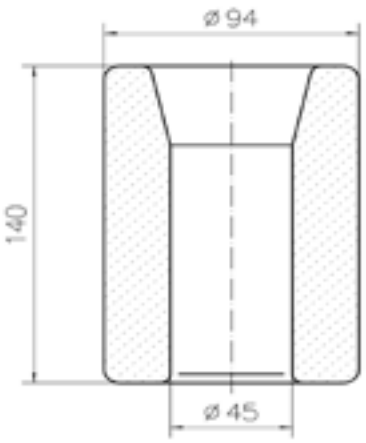


*Filter core dimensions*

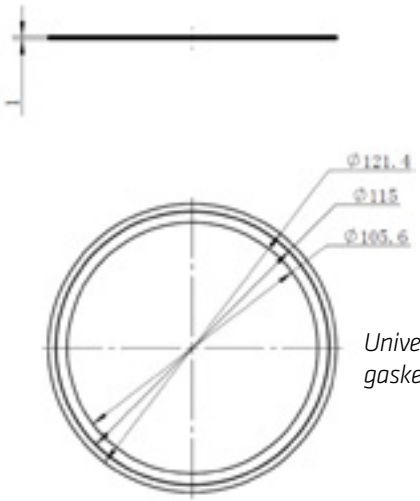


*Universal flange gaskets set*

# FILTER DRIERS WITH REPLACEABLE CORE

## MODEL DESIGNATION EXAMPLE

| Position Number | | | | | | According to Model Designation Legend |
|---|---|---|---|---|---|---|
| 1 | 2 | 3 | 4 | 5 | 6 | |
| **HTG** | A96 | 28 | 1 | 901 | | Replaceable core filter drier |
| HTG | **A96** | 28 | 1 | 901 | | 96 inch³ internal volume |
| HTG | A96 | **28** | 1 | 901 | | When Pos. 4 is "1": connection size 28mm |
| HTG | A96 | 28 | **1** | 901 | | Solder connection metric |
| HTG | A96 | 28 | 1 | **901** | | Standard product |

*Model Designation Legend*

| | | | |
|---|---|---|---|
| **1** | **Product Code** | **Filter Drier Series** | |
| | HTG | Indicates replaceable core filter drier | |
| **2** | **Internal volume** | **Expressed in inch³** | **Expressed in cm³** |
| | A48 | 48 | 787 |
| | A96 | 96 | 1573 |
| | B44 | 144 | 2360 |
| | B92 | 192 | 3146 |
| **3** | **Connection size** | **Pos. 4 shows "0": Solder [inch]** | |
| | 05 | 5/8 | |
| | 07 | 7/8 | |
| | 09 | 1 1/8 | |
| | 11 | 1 3/8 | |
| | 13 | 1 5/8 | |
| | 17 | 2 1/8 | |
| | 21 | 2 5/8 | |
| | **Connection size** | **Pos. 4 shows "1": Solder [mm]** | |
| | 05 | 16 - (5/8" version can be used e.g. HTG-A48 050) | |
| | 07 | 22 - (7/8" version can be used e.g. HTG-A48 070) | |
| | 28 | 28 | |
| | 11 | 35 - (1 3/8" version can be used e.g. HTG-A48 110) | |
| | 42 | 42 | |
| | 17 | 54 - (2 1/8" version can be used e.g. HTG-A48 170) | |
| **4** | **Pipe Connection** | **Type** | |
| | 0 | Solder with inch connections | |
| | 1 * | Solder with metric connections | |
| **5** | **Version Number** | **Description** | |
| | 901 | Standard product | |

**Note:** * Solder connections which fit to metric and inch are marked with inch product codes e.g. 16, 22, 35 and 54mm

# FILTER DRIERS WITH REPLACEABLE CORE

## GENERAL CHARACTERISTICS OF FILTER *Table 1*

| Series | Model | Part Number* | Solder Connections ODF | | Number of cores | Dimensions & Weight | | | | | Design Pressure (MPa) | PED category |
|---|---|---|---|---|---|---|---|---|---|---|---|---|
| | | | | | | A | B | L | G | Weight[1)] | | |
| | | | [inch] | [mm] | | [mm] | [mm] | [mm] | [mm] | [kg] | | |
| HTG A48s | HTG-A48050-901 | 10225004502 | 5/8 | 16 | 1 | 250 | 164 | 170 | 116 | 5,1 | 4,5 | Cat. I |
| | HTG-A48070-901 | 10225004402 | 7/8 | 22 | | 249 | 163 | 170 | 116 | 5,1 | 4,5 | |
| | HTG-A48090-901 | 10225004302 | 1 1/8 | - | | 254 | 168 | 170 | 121 | 5,1 | 4,5 | |
| | HTG-A48281-901 | 10225004202 | - | 28 | | 254 | 168 | 170 | 121 | 5,1 | 4,5 | |
| | HTG-A48110-901 | 10225004102 | 1 3/8 | 35 | | 253 | 167 | 170 | 121 | 5,1 | 4,5 | |
| | HTG-A48130-901 | 10225004002 | 1 5/8 | - | | 272 | 186 | 170 | 141 | 5,1 | 4,5 | |
| | HTG-A48421-901 | 10225003802 | - | 42 | | 272 | 186 | 170 | 141 | 5,1 | 4,5 | |
| | HTG-A48170-901 | 10225003902 | 2 1/8 | 54 | | 275 | 182 | 170 | 145 | 5,1 | 4,5 | |
| | HTG-A48210-901 | 10225003702 | 2 5/8 | - | | 277 | 177 | 170 | 149 | 5,1 | 4,5 | |
| HTG A96s | HTG-A96050-901 | 10225003602 | 5/8 | 16 | 2 | 391 | 305 | 310 | 116 | 6,2 | 4,5 | |
| | HTG-A96070-901 | 10225003502 | 7/8 | 22 | | 390 | 304 | 310 | 116 | 6,2 | 4,5 | |
| | HTG-A96090-901 | 10225003302 | 1 1/8 | - | | 395 | 309 | 310 | 121 | 6,2 | 4,5 | |
| | HTG-A96281-901 | 10225003402 | - | 28 | | 395 | 309 | 310 | 121 | 6,2 | 4,5 | |
| | HTG-A96110-901 | 10225003202 | 1 3/8 | 35 | | 394 | 308 | 310 | 121 | 6,2 | 4,5 | |
| | HTG-A96130-901 | 10225003102 | 1 5/8 | - | | 413 | 327 | 310 | 141 | 6,2 | 4,5 | |
| | HTG-A96421-901 | 10225003002 | - | 42 | | 413 | 327 | 310 | 141 | 6,2 | 4,5 | |
| | HTG-A96170-901 | 10225002902 | 2 1/8 | 54 | | 416 | 323 | 310 | 145 | 6,2 | 4,5 | |
| | HTG-A96210-901 | 10225002802 | 2 5/8 | - | | 418 | 318 | 310 | 149 | 6,2 | 4,5 | |
| HTG B44s | HTG-B44050-901 | 10225002702 | 5/8 | 16 | 3 | 532 | 446 | 310 | 116 | 7,6 | 4,5 | |
| | HTG-B44070-901 | 10225002602 | 7/8 | 22 | | 531 | 445 | 310 | 116 | 7,6 | 4,5 | |
| | HTG-B44090-901 | 10225002502 | 1 1/8 | - | | 536 | 450 | 310 | 121 | 7,6 | 4,5 | |
| | HTG-B44281-901 | 10225002402 | - | 28 | | 536 | 450 | 310 | 121 | 7,6 | 4,5 | |
| | HTG-B44110-901 | 10225002302 | 1 3/8 | 35 | | 535 | 449 | 310 | 121 | 7,6 | 4,5 | |
| | HTG-B44130-901 | 10225002202 | 1 5/8 | - | | 554 | 468 | 310 | 141 | 7,6 | 4,5 | |
| | HTG-B44421-901 | 10225002102 | - | 42 | | 554 | 468 | 310 | 141 | 7,6 | 4,5 | |
| | HTG-B44170-901 | 10225001902 | 2 1/8 | 54 | | 557 | 464 | 310 | 145 | 7,6 | 4,5 | |
| | HTG-B44210-901 | 10225001802 | 2 5/8 | - | | 559 | 459 | 310 | 149 | 7,6 | 4,5 | |
| HTG B92s | HTG-B92050-901 | 10225001702 | 5/8 | 16 | 4 | 677 | 591 | 310 | 116 | 9,1 | 4,5 | |
| | HTG-B92070-901 | 10225001602 | 7/8 | 22 | | 676 | 590 | 310 | 116 | 9,1 | 4,5 | |
| | HTG-B92090-901 | 10225001502 | 1 1/8 | - | | 681 | 595 | 310 | 121 | 9,1 | 4,5 | |
| | HTG-B92281-901 | 10225004602 | - | 28 | | 681 | 595 | 310 | 121 | 9,1 | 4,5 | |
| | HTG-B92110-901 | 10225001402 | 1 3/8 | 35 | | 680 | 594 | 310 | 121 | 9,1 | 4,5 | |
| | HTG-B92130-901 | 10225002002 | 1 5/8 | - | | 699 | 613 | 310 | 141 | 9,1 | 4,5 | |
| | HTG-B92421-901 | 10225001302 | - | 42 | | 699 | 613 | 310 | 141 | 9,1 | 4,5 | |
| | HTG-B92170-901 | 10225001202 | 2 1/8 | 54 | | 702 | 609 | 310 | 145 | 9,1 | 4,5 | |
| | HTG-B92210-901 | 10225001102 | 2 5/8 | - | | 704 | 604 | 310 | 149 | 9,1 | 4,5 | |

**Note:** * Available also as industrial package. Contact Sanhua for more details.
1) Weight of filter shell (must be added the filter core weight: 0.6 kg)

# FILTER DRIERS WITH REPLACEABLE CORE

## SELECTION TABLE - WITH CORE SH48-A00 *Table 2*

| Model | Acid Absorption capacity (g) | Capacity [kW] [1] | | | | | Moisture Absorption [gram $H_2O$] | | | | | | | |
|---|---|---|---|---|---|---|---|---|---|---|---|---|---|---|
| | | R134a | R404A / R507A | R22 | R407C[2] | R410A | R134a | | R404A / R507A | | R407C [2] / R410A | | R22 | |
| | | | | | | | 75°F | 125°F | 75°F | 125°F | 75°F | 125°F | 75°F | 125°F |
| | | | | | | | 23,9°C | 51,7°C | 23,9°C | 51,7°C | 23,9°C | 51,7°C | 23,9°C | 51,7°C |
| HTG-A48050-901 | | 78,6 | 55,8 | 80,7 | 80 | 81,5 | | | | | | | | |
| HTG-A48070-901 | | 125,6 | 89,2 | 128,9 | 128 | 130,3 | | | | | | | | |
| HTG-A48090-901 | | 180,6 | 128,2 | 185,4 | 183,9 | 187,2 | | | | | | | | |
| HTG-A48281-901 | | 180,6 | 128,2 | 185,4 | 183,9 | 187,2 | | | | | | | | |
| HTG-A48110-901 | - | 243,2 | 172,6 | 249,6 | 247,7 | 252,2 | 87,4 | 75,3 | 94,1 | 77,3 | 73,9 | 67,2 | 80,6 | 73,9 |
| HTG-A48130-901 | | 298,7 | 212 | 306,5 | 304,2 | 309,7 | | | | | | | | |
| HTG-A48421-901 | | 298,7 | 212 | 306,5 | 304,2 | 309,7 | | | | | | | | |
| HTG-A48170-901 | | 424,2 | 301,1 | 435,4 | 432 | 439,8 | | | | | | | | |
| HTG-A48210-901 | | 471,2 | 334.4 | 483,6 | 479,9 | 488,6 | | | | | | | | |
| HTG-A96050-901 | | 80,6 | 57,2 | 82,7 | 82 | 83,5 | | | | | | | | |
| HTG-A96070-901 | | 128,8 | 91,4 | 132,2 | 131,2 | 133.5 | | | | | | | | |
| HTG-A96090-901 | | 185,1 | 131,4 | 190 | 188,5 | 191,9 | | | | | | | | |
| HTG-A96281-901 | | 185,1 | 131,4 | 190 | 188,5 | 191,9 | | | | | | | | |
| HTG-A96110-901 | - | 249,3 | 176,9 | 255,9 | 253,9 | 258,5 | 174,7 | 150,5 | 188,2 | 154,6 | 147,8 | 134,4 | 161,3 | 147,8 |
| HTG-A96130-901 | | 306,1 | 217,3 | 314,2 | 311,8 | 317,4 | | | | | | | | |
| HTG-A96421-901 | | 306,1 | 217,3 | 314,2 | 311,8 | 317,4 | | | | | | | | |
| HTG-A96170-901 | | 434,8 | 308,6 | 446,3 | 442,8 | 450,8 | | | | | | | | |
| HTG-A96210-901 | | 483 | 342,8 | 495,7 | 491,9 | 500,8 | | | | | | | | |
| HTG-B44050-901 | | 82,5 | 58,6 | 84,7 | 84 | 85,6 | | | | | | | | |
| HTG-B44070-901 | | 131,9 | 93,6 | 135,4 | 134,3 | 136,8 | | | | | | | | |
| HTG-B44090-901 | | 189,6 | 134,6 | 194,6 | 193,1 | 196,6 | | | | | | | | |
| HTG-B44281-901 | | 189,6 | 134,6 | 194,6 | 193,1 | 196,6 | | | | | | | | |
| HTG-B44110-901 | - | 255,4 | 181,3 | 262,1 | 260,1 | 264,8 | 262,1 | 225,8 | 282,2 | 231,8 | 221,8 | 201,6 | 241,9 | 221,8 |
| HTG-B44130-901 | | 313,6 | 222,6 | 321,9 | 319,4 | 325,1 | | | | | | | | |
| HTG-B44421-901 | | 313,6 | 222,6 | 321,9 | 319,4 | 325,1 | | | | | | | | |
| HTG-B44170-901 | | 445,4 | 316,1 | 457,1 | 453,6 | 461,8 | | | | | | | | |
| HTG-B44210-901 | | 494,8 | 351,2 | 507,8 | 503,9 | 513,0 | | | | | | | | |
| HTG-B92050-901 | | 84,5 | 60 | 86,7 | 86 | 87,6 | | | | | | | | |
| HTG-B92070-901 | | 135,1 | 95,9 | 138,6 | 137,5 | 140 | | | | | | | | |
| HTG-B92090-901 | | 194,1 | 137,8 | 199,3 | 197,7 | 201,3 | | | | | | | | |
| HTG-B92281-901 | | 194,1 | 137,8 | 199,3 | 197,7 | 201,3 | | | | | | | | |
| HTG-B92110-901 | - | 261,5 | 185,6 | 268,4 | 266,3 | 271,1 | 349,4 | 301,1 | 376,3 | 309,1 | 295,7 | 268,8 | 322,6 | 295,7 |
| HTG-B92130-901 | | 321,1 | 227,9 | 329,5 | 327 | 332,9 | | | | | | | | |
| HTG-B92421-901 | | 321,1 | 227,9 | 329,5 | 327 | 332,9 | | | | | | | | |
| HTG-B92170-901 | | 456 | 323,6 | 468 | 464,4 | 472,8 | | | | | | | | |
| HTG-B92210-901 | | 506.6 | 359,5 | 519,9 | 515,9 | 525,2 | | | | | | | | |

# FILTER DRIERS WITH REPLACEABLE CORE

## SELECTION TABLE - WITH CORE SH48-A80 *Table 3*

| Model | Acid Absorption capacity (g) | Capacity [kW] [1] | | | | | Moisture Absorption [gram $H_2O$] | | | | | | | |
|---|---|---|---|---|---|---|---|---|---|---|---|---|---|---|
| | | R134a | R404A / R507A | R22 | R407C[2] | R410A | R134a | | R404A / R507A | | R407C [2] / R410A | | R22 | |
| | | | | | | | 75°F | 125°F | 75°F | 125°F | 75°F | 125°F | 75°F | 125°F |
| | | | | | | | 23,9°C | 51,7°C | 23,9°C | 51,7°C | 23,9°C | 51,7°C | 23,9°C | 51,7°C |
| HTG-A48050-901 | | 78,6 | 55,8 | 80,7 | 80 | 81,5 | | | | | | | | |
| HTG-A48070-901 | | 125,6 | 89,2 | 128,9 | 128 | 130,3 | | | | | | | | |
| HTG-A48090-901 | | 180,6 | 128,2 | 185,4 | 183,9 | 187,2 | | | | | | | | |
| HTG-A48281-901 | | 180,6 | 128,2 | 185,4 | 183,9 | 187,2 | | | | | | | | |
| HTG-A48110-901 | 10 | 243,2 | 172,6 | 249,6 | 247,7 | 252,2 | 74,3 | 64 | 80 | 65,7 | 62,8 | 57,1 | 68,5 | 62,8 |
| HTG-A48130-901 | | 298,7 | 212 | 306,5 | 304,2 | 309,7 | | | | | | | | |
| HTG-A48421-901 | | 298,7 | 212 | 306,5 | 304,2 | 309,7 | | | | | | | | |
| HTG-A48170-901 | | 424,2 | 301,1 | 435,4 | 432 | 439,8 | | | | | | | | |
| HTG-A48210-901 | | 471,2 | 334.4 | 483,6 | 479,9 | 488,6 | | | | | | | | |
| HTG-A96050-901 | | 80,6 | 57,2 | 82,7 | 82 | 83,5 | | | | | | | | |
| HTG-A96070-901 | | 128,8 | 91,4 | 132,2 | 131,2 | 133.5 | | | | | | | | |
| HTG-A96090-901 | | 185,1 | 131,4 | 190 | 188,5 | 191,9 | | | | | | | | |
| HTG-A96281-901 | | 185,1 | 131,4 | 190 | 188,5 | 191,9 | | | | | | | | |
| HTG-A96110-901 | 20 | 249,3 | 176,9 | 255,9 | 253,9 | 258,5 | 148,5 | 128 | 159,9 | 131,4 | 125,7 | 114,2 | 137,1 | 125,7 |
| HTG-A96130-901 | | 306,1 | 217,3 | 314,2 | 311,8 | 317,4 | | | | | | | | |
| HTG-A96421-901 | | 306,1 | 217,3 | 314,2 | 311,8 | 317,4 | | | | | | | | |
| HTG-A96170-901 | | 434,8 | 308,6 | 446,3 | 442,8 | 450,8 | | | | | | | | |
| HTG-A96210-901 | | 483 | 342,8 | 495,7 | 491,9 | 500,8 | | | | | | | | |
| HTG-B44050-901 | | 82,5 | 58,6 | 84,7 | 84 | 85,6 | | | | | | | | |
| HTG-B44070-901 | | 131,9 | 93,6 | 135,4 | 134,3 | 136,8 | | | | | | | | |
| HTG-B44090-901 | | 189,6 | 134,6 | 194,6 | 193,1 | 196,6 | | | | | | | | |
| HTG-B44281-901 | | 189,6 | 134,6 | 194,6 | 193,1 | 196,6 | | | | | | | | |
| HTG-B44110-901 | 30 | 255,4 | 181,3 | 262,1 | 260,1 | 264,8 | 222,8 | 191,9 | 239,9 | 197,1 | 188,5 | 171,4 | 205,6 | 188,5 |
| HTG-B44130-901 | | 313,6 | 222,6 | 321,9 | 319,4 | 325,1 | | | | | | | | |
| HTG-B44421-901 | | 313,6 | 222,6 | 321,9 | 319,4 | 325,1 | | | | | | | | |
| HTG-B44170-901 | | 445,4 | 316,1 | 457,1 | 453,6 | 461,8 | | | | | | | | |
| HTG-B44210-901 | | 494,8 | 351,2 | 507,8 | 503,9 | 513,0 | | | | | | | | |
| HTG-B92050-901 | | 84,5 | 60 | 86,7 | 86 | 87,6 | | | | | | | | |
| HTG-B92070-901 | | 135,1 | 95,9 | 138,6 | 137,5 | 140 | | | | | | | | |
| HTG-B92090-901 | | 194,1 | 137,8 | 199,3 | 197,7 | 201,3 | | | | | | | | |
| HTG-B92281-901 | | 194,1 | 137,8 | 199,3 | 197,7 | 201,3 | | | | | | | | |
| HTG-B92110-901 | 40 | 261,5 | 185,6 | 268,4 | 266,3 | 271,1 | 297 | 255,9 | 319,9 | 262,8 | 251,3 | 228,5 | 274,2 | 251,3 |
| HTG-B92130-901 | | 321,1 | 227,9 | 329,5 | 327 | 332,9 | | | | | | | | |
| HTG-B92421-901 | | 321,1 | 227,9 | 329,5 | 327 | 332,9 | | | | | | | | |
| HTG-B92170-901 | | 456 | 323,6 | 468 | 464,4 | 472,8 | | | | | | | | |
| HTG-B92210-901 | | 506.6 | 359,5 | 519,9 | 515,9 | 525,2 | | | | | | | | |

**Note:**
1. The data reported in the Table 2 and 3 is based on filter driers in a clean system at ideal conditions; with impurities accumulated in the filter, the capacity may decrease.
2. R407C data based on dew point conditions
3. Adsorption capacity of oleic acid at 0.05 TAN (Total Acid Number)

# FILTER DRIERS WITH REPLACEABLE CORE

## SELECTION FORMULAS

Filter driers for liquid line are manufactured in compliance with ARI Standard 710. Maximum flow rate of liquid refrigerant at a differential pressure of 0,07bar (1psi) is indicated by kW (ton) which is based on the temperature of liquid refrigerant 30°C (86°F), the evaporating temperature of -15°C (5°F) and the following mass flow:

- 0,40 kg/min/kW (3.1 lb/min/ton) R134a
- 0,53 kg/min/kW (4.1 lb/min/ton) R404A, R507A
- 0,39 kg/min/kW (3.0 lb/min/ton) R22, R407C
- 0,36 kg/min/kW (2.8 lb/min/ton) R410A

**Note:** Data on water absorption is based on the following EPD (method: ASHRAE Standard 63.1):

- 60ppm R22
- 50ppm R134a
- 50ppm R404A
- 50ppm R407C
- 50ppm R410A
- 50ppm R507A

## SUCTION LINE FILTER-DRIERS:

Any pressure loss in the suction line also reduces system capacity significantly. Obtaining a low pressure drop is particularly important for energy savings on all the air conditioning and refrigeration systems. Therefore, suction line filter-driers should be sized generously on these systems. Sanhua suggests that the pressure drop across it should not exceed the values given in the table below (table 4: DP limits in metric units; table 5: DP limits in imperial units)

*Table 4*

| Suction Line Filter Drier Maximum Recommended Pressure Drop (bar) | | | | | |
|---|---|---|---|---|---|
| System | Evaporator Saturated Suction Temperature[4] (°C) | Permanent Installation | | Temporary Installation | |
| | | Refrigerant | | | |
| | | R22; R404A; R407C; R410A, R507 | R134a | R22; R404A; R407C; R410A, R507 | R134a |
| Air conditioning | 4 | 0,21 | 0,14 | 0,56 | 0,42 |
| Commercial | -7 | 0,14 | 0,105 | 0,28 | 0,21 |
| Low temperature | -29 | 0,07 | 0,035 | 0,14 | 0,07 |

*Table 5*

| Suction Line Filter Drier Maximum Recommended Pressure Drop (psi) | | | | | |
|---|---|---|---|---|---|
| System | Evaporator Saturated Suction Temperature[5] (°F) | Permanent Installation | | Temporary Installation | |
| | | Refrigerant | | | |
| | | R22; R404A; R407C; R410A, R507 | R134a | R22; R404A; R407C; R410A, R507 | R134a |
| Air conditioning | 40 | 3 | 2 | 8 | 6 |
| Commercial | 20 | 2 | 1,5 | 4 | 3 |
| Low temperature | -20 | 1 | 0,5 | 2 | 1 |

# FILTER DRIERS WITH REPLACEABLE CORE

## SUCTION LINE FLOW CAPACITY WITH CORE SH48-A30 (KW)[1] *Table 6*

| Model | Capacity (kW) | | | | | | | | | | | |
|---|---|---|---|---|---|---|---|---|---|---|---|---|
| | Evaporation temperature (°C) | | | | | | | | | | | |
| | -40 | -20 | 4,4 | -30 | -20 | 4,4 | -40 | -20 | 4,4 | -40 | -20 | 4,4 |
| | Pressure drop (bar) | | | | | | | | | | | |
| | 0,04 | 0,10 | 0,21 | 0,04 | 0,07 | 0,14 | 0,04 | 0,10 | 0,21 | 0,04 | 0,10 | 0,21 |
| | R22/R407C | | | R134a | | | R404A/R507 | | | R410A | | |
| HTG-A48050-901 | 3,0 | 8,5 | 20,0 | 2,9 | 5,1 | 12,4 | 2,3 | 6,7 | 16,6 | 3,0 | 8,5 | 20,0 |
| HTG-A48070-901 | 5,5 | 15,5 | 36,0 | 5,3 | 9,4 | 22,2 | 4,3 | 12,3 | 29,6 | 5,5 | 15,3 | 36,0 |
| HTG-A48090-901 | 7,4 | 20,5 | 48,5 | 7,1 | 12,6 | 30,0 | 5,7 | 16,3 | 40,0 | 7,4 | 20,5 | 48,5 |
| HTG-A48281-901 | 7,4 | 20,5 | 48,5 | 7,1 | 12,6 | 30,0 | 5,7 | 16,3 | 40,0 | 7,4 | 20,5 | 48,5 |
| HTG-A48110-901 | 9,5 | 26,0 | 61,0 | 9,1 | 16.0 | 37.5 | 7.3 | 20.7 | 50.0 | 9.5 | 26.0 | 61.0 |
| HTG-A48130-901 | 9.5 | 26.0 | 61.0 | 9,1 | 16.0 | 37.5 | 7.3 | 20.7 | 50.0 | 9.5 | 26.0 | 61.0 |
| HTG-A48421-901 | 9.5 | 26.0 | 61.0 | 9,1 | 16.0 | 37.5 | 7.3 | 20.7 | 50.0 | 9.5 | 26.0 | 61.0 |
| HTG-A48170-901 | 9.5 | 26.0 | 61.0 | 9,1 | 16.0 | 37.5 | 7.3 | 20.7 | 50.0 | 9.5 | 26.0 | 61.0 |
| HTG-A48210-901 | 9.5 | 26.0 | 61.0 | 9,1 | 16.0 | 37.5 | 7.3 | 20.7 | 50.0 | 9.5 | 26.0 | 61.0 |
| HTG-A96050-901 | 3.1 | 8.6 | 20.3 | 3.0 | 5.4 | 12.7 | 2.4 | 7.0 | 17.1 | 3.1 | 8.7 | 20.5 |
| HTG-A96070-901 | 5.5 | 15.4 | 36.2 | 5.3 | 9.4 | 22.4 | 4.3 | 12.3 | 29.8 | 5.5 | 15.4 | 36.2 |
| HTG-A96090-901 | 8.3 | 23.4 | 55.4 | 8.0 | 14.3 | 34.1 | 6.5 | 18.7 | 46.0 | 8.3 | 23.4 | 56.0 |
| HTG-A96281-901 | 8.3 | 23.4 | 55.4 | 8.0 | 14.3 | 34.1 | 6.5 | 18.7 | 46.0 | 8.3 | 23.4 | 56.0 |
| HTG-A96110-901 | 11.3 | 32.0 | 76.0 | 10.8 | 19.4 | 46.5 | 8.8 | 25.5 | 63.0 | 11.3 | 32.0 | 76.0 |
| HTG-A96130-901 | 13.5 | 38.0 | 91.0 | 13.0 | 23.1 | 55.6 | 10.5 | 30.4 | 75.0 | 13.4 | 38.0 | 91.0 |
| HTG-A96421-901 | 13.5 | 38.0 | 91.0 | 13.0 | 23.1 | 55.6 | 10.5 | 30.4 | 75.0 | 13.4 | 38.0 | 91.0 |
| HTG-A96170-901 | 13.5 | 38.0 | 91.0 | 13.0 | 23.1 | 55.6 | 10.5 | 30.4 | 75.0 | 13.4 | 38.0 | 91.0 |
| HTG-A96210-901 | 13.5 | 38.0 | 91.0 | 13.0 | 23.1 | 55.6 | 10.5 | 30.4 | 75.0 | 13.4 | 38.0 | 91.0 |
| HTG-B44050-901 | 3.3 | 9.5 | 21.7 | 3.2 | 5.7 | 13.3 | 2.6 | 7.3 | 16.5 | 3.3 | 9.5 | 21.7 |
| HTG-B44070-901 | 6.3 | 18.0 | 41.0 | 6.0 | 10.6 | 25.1 | 4.8 | 13.8 | 34.0 | 6.3 | 18.0 | 41.0 |
| HTG-B44090-901 | 8.4 | 24.0 | 55.0 | 8.0 | 14.3 | 34.0 | 6.5 | 18.5 | 46.0 | 8.4 | 24.0 | 55.0 |
| HTG-B44281-901 | 8.4 | 24.0 | 55.0 | 8.0 | 14.3 | 34.0 | 6.5 | 18.5 | 46.0 | 8.4 | 24.0 | 55.0 |
| HTG-B44110-901 | 12.5 | 36.5 | 89.0 | 12.1 | 22.0 | 54.0 | 9.8 | 29.2 | 73.0 | 12.5 | 36.5 | 89.0 |
| HTG-B44130-901 | 12.5 | 36.5 | 89.0 | 12.1 | 22.0 | 54.0 | 9.8 | 29.2 | 73.0 | 12.5 | 36.5 | 89.0 |
| HTG-B44421-901 | 12.5 | 36.5 | 89.0 | 12.1 | 22.0 | 54.0 | 9.8 | 29.2 | 73.0 | 12.5 | 36.5 | 89.0 |
| HTG-B44170-901 | 12.5 | 36.5 | 89.0 | 12.1 | 22.0 | 54.0 | 9.8 | 29.2 | 73.0 | 12.5 | 36.5 | 89.0 |
| HTG-B44210-901 | 12.5 | 36.5 | 89.0 | 12.1 | 22.0 | 54.0 | 9.8 | 29.2 | 73.0 | 12.5 | 36.5 | 89.0 |
| HTG-B92050-901 | 4.0 | 10.9 | 25.9 | 3.8 | 6.7 | 16.0 | 3.0 | 8.7 | 21.6 | 4.0 | 10.9 | 25.9 |
| HTG-B92070-901 | 7.5 | 20.5 | 48.8 | 7.2 | 12.7 | 30.0 | 5.8 | 16.5 | 40.6 | 7.5 | 20.5 | 48.8 |
| HTG-B92090-901 | 10.1 | 27.5 | 66.0 | 9.7 | 17.1 | 40.0 | 7.8 | 22.1 | 54.3 | 10.1 | 27.5 | 66.0 |
| HTG-B92281-901 | 10.1 | 27.5 | 66.0 | 9.7 | 17.1 | 40.0 | 7.8 | 22.1 | 54.3 | 10.1 | 27.5 | 66.0 |
| HTG-B92110-901 | 14.1 | 39.7 | 95.0 | 13.6 | 24.2 | 58.1 | 11.0 | 31.9 | 78.1 | 14.1 | 39.7 | 95.0 |
| HTG-B92130-901 | 17.1 | 49.0 | 118.0 | 16.5 | 30.0 | 72.0 | 13.4 | 39.0 | 97.0 | 17.1 | 49.0 | 118.0 |
| HTG-B92421-901 | 17.1 | 49.0 | 118.0 | 16.5 | 30.0 | 72.0 | 13.4 | 39.0 | 97.0 | 17.1 | 49.0 | 118.0 |
| HTG-B92170-901 | 17.1 | 49.0 | 118.0 | 16.5 | 30.0 | 72.0 | 13.4 | 39.0 | 97.0 | 17.1 | 49.0 | 118.0 |
| HTG-B92210-901 | 17.1 | 49.0 | 118.0 | 16.5 | 30.0 | 72.0 | 13.4 | 39.0 | 97.0 | 17.1 | 49.0 | 118.0 |

# FILTER DRIERS WITH REPLACEABLE CORE

The capacities listed in the table 6 are rated at the maximum recommended pressure drop for permanent installation.
Suction line Filter-Driers guarantees an acid removal and a drying capacity described in table 7:

*Table 7*

| Drying capacity: SH48-A30[1] | | | | | |
|---|---|---|---|---|---|
| **Filter Type** | | **HTG-A48** | **HTG-A96** | **HTG-B44** | **HTG-B92** |
| **Number of cores** | | **1** | **2** | **3** | **4** |
| **Acid Adsorption capacity (g)[3]** | | **28,0** | **56,0** | **84,0** | **112,0** |
| **Refrigerant** | **Evaporating Temp. (°C)[4]** | **Moisture Absorption [gram H2O]** | | | |
| R22/ R407C[2] | -40,0 | 26,0 | 52,0 | 78,0 | 104,0 |
| | -20,0 | 18,0 | 36,3 | 54,0 | 72,0 |
| | 4,4 | 11,0 | 22,0 | 32,0 | 43,0 |
| R134a | -30,0 | 43,0 | 86,0 | 129,0 | 172,0 |
| | -20,0 | 36,0 | 72,0 | 108,0 | 144,0 |
| | 4,4 | 25,0 | 50,0 | 75,0 | 100,0 |
| R404A / R507 | -40,0 | 45,0 | 90,0 | 135,0 | 180,0 |
| | -20,0 | 28,0 | 56,0 | 84,0 | 112,0 |
| | 4,4 | 18,0 | 36,0 | 54,0 | 72,0 |
| R410A | -40,0 | 40,0 | 80,0 | 120,0 | 160,0 |
| | -20,0 | 33,0 | 66,0 | 99,0 | 132,0 |
| | 4,4 | 24,0 | 48,0 | 72,0 | 96,0 |

Drying capacity is expressed during drying in:
R22: EPD = 10 ppm W, corresponding dew point temperature is -50°C
R134a: EPD = 50 ppm W, corresponding dew point temperature is -37°C
R404A: EPD = 10 ppm W, corresponding dew point temperature is -40°C
R407C: EPD = 10 ppm W, corresponding dew point temperature is -40°C

**Note:**
1. The data reported in the Table 2, 3, 6 and 7 are based on filter driers in a clean system at ideal conditions; with impurities accumulated in the filter, the capacity may decrease.
2. R407C data based on dew point conditions
3. Adsorption capacity of oleic acid at 0.05 TAN (Total Acid Number)
4. Standard Evaporating Temperature defined by ANSI.AHRI Standard 731 (SI)-2013
5. Standard Evaporating Temperature defined by ANSI.AHRI Standard 730 (I-P)-2013

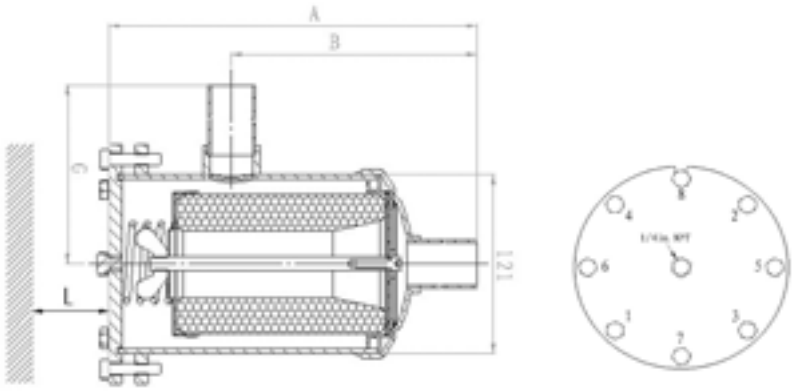

SANHUA

**SANHUA** INTERNATIONAL
**info@sanhuaeurope.com**

# MICRO-CHANNEL HEAT EXCHANGERS

**SANHUA DELIVERED OVER 5 MILLION MCHE CONDENSERS (CO&HP) AND EVAPORARTORS HELPING TO IMPROVE SYSTEM EFFICIENCY BY UP TO 30%**

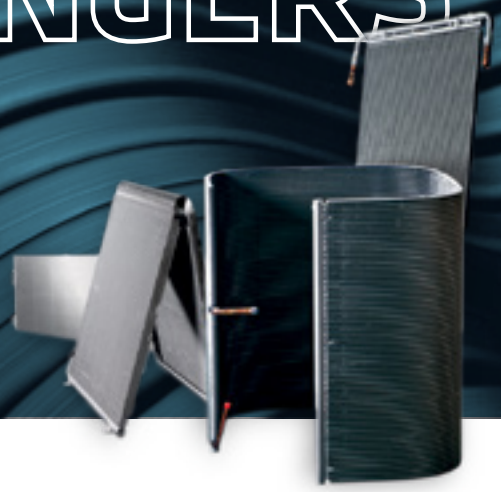

## SANHUA IS THE WORLD'S LARGEST PRODUCER OF MICRO-CHANNEL HEAT EXCHANGERS FOR STATIONARY HVAC&R APPLICATION

*DISCOVER WHY*
**sanhuaeurope.com**

***DSG*** *SERIES*

# LIQUID LINE FILTER DRIER WITH SIGHT GLASS

DSG Series liquid line filter drier/sight glass combination is a liquid line filter drier with a sight glass connected to the outlet side of the filter drier are used in refrigeration system with unidirectional flow to absorb moisture in the system and to filter out the impurities. Observe property changes of the refrigerant (liquid / vapor) and indicate the moisture level by the sight glass as well.

## FEATURES

- HIGHLY EFFICIENT IN MOISTURE ABSORPTION, FILTERING IMPURITY, PAINT REMAINS AND MUD REMOVAL
- DURABLE AND SOLID FILTER CORES
- FILTERING FINENESS: 20μm
- CORROSION RESISTANT PAINTING SURVIVES SALT SPRAY TEST OF 500 HOURS
- SIGHT GLASS WITH NEW ANNULAR HUMIDITY COLOR INDICATOR TO REALIZE HIGH PRECISION AND FULL PORT PASSAGE WITH LOW PRESSURE DROP
- COMPACT UNIT: REDUCE CUSTOMER INSTALLATION TIME AND REDUCE POTENTIAL LEAKAGE RISK

### GENERAL SPECIFICATION

- Applicable for all common HFC, HFO refrigerants such as: R134a, R404A, R407A/F, R407C, R410A, R448A, R449A, R450A, R452A, R513A, R507A
- Ambient temperature min./max.: -30°C / +55°C
- Medium temperature TS min./max.: -30°C / +80°C
- Max. operating pressure PS max.: 4,6 MPa
- Installation position:
  - Flow direction corresponds to the arrow
  - Preferably installed in liquid line
- Certifications: UL/CSA and PED declaration

# LIQUID LINE FILTER DRIER WITH SIGHT GLASS

## TECNHICAL PARAMETERS *Desiccant Selection Table*

| | Medium Type | 100% 3Å Desiccant |
|---|---|---|
| Refrigerant | HFC | Applicable |
| | HFO | Applicable |
| Oil[3] | Mineral oil or AB | Applicable |
| | Pure POE or PAG | Applicable |
| | POE or PAG with additive | Applicable |

*Model Designation Legend*

| | | | |
|---|---|---|---|
| **1** | **Product Code** | **Product Series** | |
| | DSG | Indicates unidirectional filter drier with Sight glass | |
| **2** | **Filter Core** | **Structure and Material** | |
| | B | Solid core, 100%3Å desiccant | |
| **3** | **Internal Volume[1)]** | **Expressed in [ inch³ ]** | **Expressed in [ cm³ ]** |
| | 05 | 5 | 82 |
| | 08 | 8 | 131 |
| | 16 | 16 | 262 |
| **4** | **Connection Size** | **Pos. 5 shows "4": SAE Flare [inch]** | |
| | 02 | 1/4 | |
| | 03 | 3/8 | |
| | 04 | 1/2 | |
| **5** | **Pipe Connection** | **Type** | |
| | 4 | SAE flare connections | |
| **6** | **Version Number** | **Description** | |
| | 002 | Series number | |

## MODEL DESIGNATION EXAMPLE

| Position Number | | | | | | According to Model Designation Legend |
|---|---|---|---|---|---|---|
| 1 | 2 | 3 | 4 | 5 | 6 | |
| **DSG** | B | 05 | 02 | 4 | 002 | Unidirectional filter drier & sight glass assembly |
| DSG | **B** | 05 | 02 | 4 | 002 | Solid filter core with 100% 3Å desiccant |
| DSG | B | **05** | 02 | 4 | 002 | 5 inch³ internal volume |
| DSG | B | 05 | **02** | 4 | 002 | When Pos. 5 is "4": SAE flare connection size 1/4" |
| DSG | B | 05 | 02 | **4** | 002 | SAE flare connection |
| DSG | B | 05 | 02 | 4 | **002** | Series number |

# LIQUID LINE FILTER DRIER WITH SIGHT GLASS

## VERSION WITH MALE/MALE FLARE CONNECTIONS

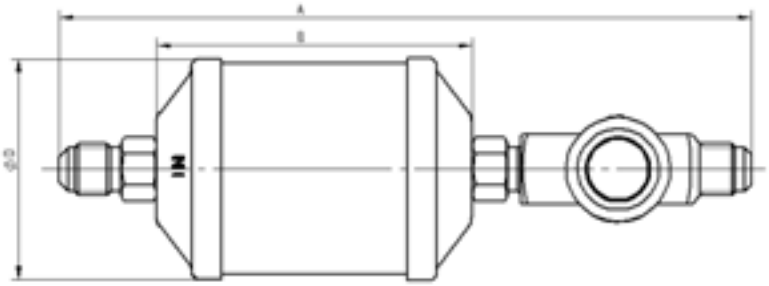


| Series | Model | Part Number[1)] | Nominal Volume | | Connection | Dimensions & Weight | | | | PED Category [2)] |
|---|---|---|---|---|---|---|---|---|---|---|
| | | | | | SAE Flare | ØD | A | B | Weight | |
| | | | [inch³] | [cm³] | [inch] | [mm] | [mm] | [mm] | [g] | |
| DSGB 052 | DSG-B05 024-002 | 10221000102 | 5 | 82 | 1/4 | 69 | 168 | 76 | 620 | Art. 4.3 |
| DSGB 082 | DSG-B08 024-002 | 10221000202 | 8 | 131 | 1/4 | 69 | 190 | 89 | 640 | Art. 4.3 |
| DSGB 083 | DSG-B08 034-002 | 10221000302 | 8 | 131 | 3/8 | 69 | 214 | 89 | 640 | Art. 4.3 |
| DSGB 163 | DSG-B16 034-002 | 10221000402 | 16 | 262 | 3/8 | 69 | 234 | 118 | 700 | Art. 4.3 |
| DSGB 164 | DSG-B16 044-002 | 10221000502 | 16 | 262 | 1/2 | 69 | 245 | 118 | 700 | Art. 4.3 |

**Note:** 1) Available also as industrial package. Contact Sanhua for more details.
2) PED Directive 2014/68/EU

## SELECTION TABLE

| Model | Capacity[1)] [ kW ] | | | | | Moisture Absorption (gram $H_2O$) | | | | | | | |
|---|---|---|---|---|---|---|---|---|---|---|---|---|---|
| | R134a | R404A / R507A | R22 | R407C[2)] | R410A | R134a | | R404A / R507A | | R407C[2)] / R410A | | R22 | |
| | | | | | | 75°F | 125°F | 75°F | 125°F | 75°F | 125°F | 75°F | 125°F |
| | | | | | | 23,9°C | 51,7°C | 23,9°C | 51,7°C | 23,9°C | 51,7°C | 23,9°C | 51,7°C |
| DSGB 052 | 8,4 | 6,0 | 8,4 | 8,4 | 8,4 | 11,6 | 10,9 | 10,9 | 8,9 | 10,9 | 9,5 | 11,4 | 9,7 |
| DSGB 082 | 8,4 | 6,0 | 8,4 | 8,4 | 8,4 | 14,8 | 14,2 | 16,3 | 13,4 | 14,8 | 13,0 | 15,5 | 13,1 |
| DSGB 083 | 25,0 | 17,6 | 25,3 | 25,0 | 25,7 | 14,8 | 14,2 | 16,3 | 13,4 | 14,8 | 13,0 | 15,5 | 13,1 |
| DSGB 163 | 25,7 | 17,9 | 26,0 | 26,0 | 26,4 | 20,6 | 19,5 | 33,2 | 18,3 | 20,6 | 17,6 | 20,9 | 17,7 |
| DSGB 164 | 32,4 | 22,9 | 33,1 | 32,7 | 33,8 | 20,6 | 19,5 | 33,2 | 18,3 | 20,6 | 17,6 | 20,9 | 17,7 |

**Note:** 1) The above data is based on clean system at ideal conditions; with impurities accumulated in the filter, the capacity may decrease
2) R407C capacity is based on dew point conditions

# LIQUID LINE FILTER DRIER WITH SIGHT GLASS

## SELECTION FORMULAS

Filter Driers for liquid line are manufactured in compliance with ARI Standard 710. Maximum flow rate of liquid refrigerant at a differential pressure of 0,07bar (1psi) is indicated by kW (ton) which is based on the temperature of liquid refrigerant 30°C (86°F), the evaporating temperature of -15°C (5°F) and the following mass flow:

- 0,40 kg/min/kW (3.1 lb/min/ton) R134a
- 0,53 kg/min/kW (4.1 lb/min/ton) R404A, R507A
- 0,39 kg/min/kW (3.0 lb/min/ton) R22, R407C
- 0,36 kg/min/kW (2.8 lb/min/ton) R410A

**Note:** Data on water absorption is based on the following EPD (method: ASHRAE Standard 63.1):

- 60ppm R22
- 50ppm R134a
- 50ppm R404A
- 50ppm R407C
- 50ppm R410A
- 50ppm R507A

*Moisture Indication Limits*

| Refrigerant | Moisture Content 25°C: PPM | | |
|---|---|---|---|
| | Green/Dry | Middle Color | Yellow/Wet |
| R22 | <100 | 100~200 | >200 |
| R134a | <90 | 90~180 | >180 |
| R404A | <40 | 40~100 | >100 |
| R410A | <90 | 90~300 | >300 |
| R507 | <15 | 15~90 | >90 |
| R407C | <120 | 120~280 | >280 |

| Refrigerant | Moisture Content 40°C: PPM | | |
|---|---|---|---|
| | Green/Dry | Middle Color | Yellow/Wet |
| R22 | <140 | 140~350 | >350 |
| R134a | <120 | 120~330 | >335 |
| R404A | <80 | 80~160 | >160 |
| R410A | <200 | 200~580 | >580 |
| R507 | <80 | 80~170 | >170 |
| R407C | <100 | 100~260 | >260 |

## ***DTG-M02*** *SERIES*

# 1.5 IN³ FILTER DRIER

DTG-M02 series 1.5in3 filter drier are mainly used for light commercial refrigeration applications, with unidirectional flow to absorb moisture and filter out the impurities.

## FEATURES

- STAINLESS STEEL HOUSING WITH HIGH STRENGTH
- HOUSING SURFACE ADOPTS ADSORPTION PRINCIPLE TO FORM A NANO-SOLID FILM TO ANTI-RUST, SURVIVES MORE THAN 1500 HOURS OF NEUTRAL SALT SPRAY TEST.
- SOLID FILER CORES, HIGHLY EFFICIENT IN MOISTURE ABSORPTION, FILTERING IMPURITY.
- COMPACT DESIGN, MEETING THE STRICT 150G SYSTEM LIMITS FOR FLAMMABLE REFRIGERANTS SUCH AS R290.

### GENERAL SPECIFICATION

- Applicable refrigerants: HCFC, HFC, HC, HFO
- Medium temperature: -30°C~+120°C
- Ambient temperature: -30°C~+55°C
- Max. Operation pressure PS max: 4.83MPa (48,3bar) - 700PSI
- Installation position:
  - Flow direction corresponds to the arrow
  - Preferably installed in liquid line
- Certification: UL/CSA and PED declaration

# 1.5 IN³ FILTER DRIER

*Model Designation Legend*

| | | | |
|---|---|---|---|
| **1** | **Product Code** | **Product Series** | |
| | DTG | Indicates unidirectional filter drier | |
| **2** | **Filter Core** | **Structure and Material** | |
| | M | Solid core, 100%3Å desiccant, stainless steel housing | |
| **3** | **Filter core volume** | **[inch³]** | **[cm³]** |
| | 02 | 1.5 | 25 |
| **4** | **Connection Size** | **Pos. 5 shows "0": Solder [inch]** | |
| | 02 | 1/4 | |
| | 03 | 3/8 | |
| | 04 | 1/2 | |
| **4** | **Connection Size** | **Pos. 5 shows "1": Solder [inch]** | |
| | 06 | 6 | |
| | 10 | 10 | |
| | 12 | 12 | |
| **5** | **Pipe Connection** | **Type** | |
| | 0 | Solder with inch connections | |
| | 1 | Solder with metric connections | |
| **6** | **Version Number** | **Description** | |
| | 901 | Series number | |

## MODEL DESIGNATION EXAMPLE

| Position Number | | | | | | According to Model Designation Legend |
|---|---|---|---|---|---|---|
| **1** | **2** | **3** | **4** | **5** | **6** | |
| **DTG** | M | 02 | 02 | 0 | 901 | Unidirectional filter drier |
| DTG | **M** | 02 | 02 | 0 | 901 | Solid filter core with 100% 3Å desiccant, stainless steel |
| DTG | M | **02** | 02 | 0 | 901 | 1.5 inch³ filter core volume |
| DTG | M | 02 | **02** | 0 | 901 | When Pos. 5 is "0": connection size 1/4 inch |
| DTG | M | 02 | 02 | **0** | 901 | Solder connection inch |
| DTG | M | 02 | 02 | 0 | **901** | Series number |

# 1.5 IN³ FILTER DRIER

## GENERAL CHARACTERISTICS

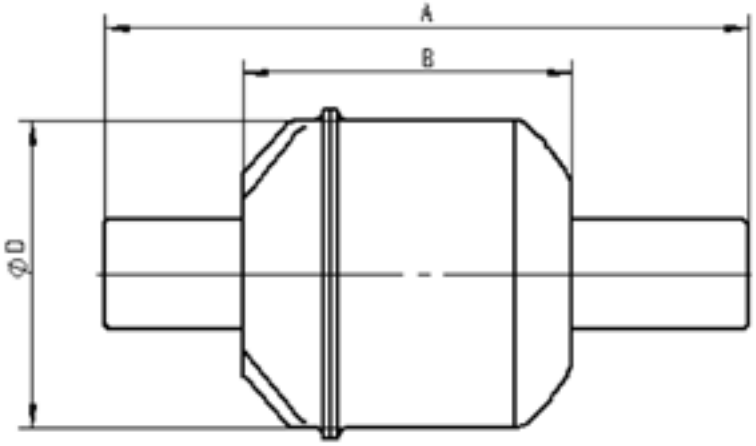


| Filter | Model | Part Number (Industrial pack) | Solder connection | | Dimensions & Weight | | | | PED Category |
|---|---|---|---|---|---|---|---|---|---|
| | | | | | ØD | B | A | Weight | |
| | | | [inch] | [mm] | [mm] | [mm] | [mm] | [g] | |
| DTGM022s | DTG-M02020-901 | 10230041401 | 1/4 | – | 42 | 45 | 77 | 95 | Art. 4.3 |
| DTGM023s | DTG-M02030-901 | 10230039601 | 3/8 | – | 42 | 45 | 77 | 95 | Art. 4.3 |
| DTGM024s | DTG-M02040-901 | 10230041501 | 1/2 | – | 42 | 45 | 83 | 95 | Art. 4.3 |
| DTGM022/2.8mms | DTG-M02020-003 | 10230056701 | 1/4_2.8 mm | | 42 | 45 | 105,5 | 97.7 | Art. 4.3 |

# 1.5 IN³ FILTER DRIER

## SELECTION TABLE

| Model | Capacity[1] [kW]/[TR] | | | | | Moisture Absorption (gram $H_2O$) | | | | | | | |
|---|---|---|---|---|---|---|---|---|---|---|---|---|---|
| | R134a | R404A / R507A | R290 | R407C[2] | R410A | R134a | | R404A / R507A | | R407C[2] / R410A | | R290 | |
| | | | | | | 75°F / 23,9°C | 125°F / 51,7°C | 75°F / 23,9°C | 125°F / 51,7°C | 75°F / 23,9°C | 125°F / 51,7°C | 75°F / 23,9°C | 125°F / 51,7°C |
| DTGM022s | 2.3/0.66 | 1.6/0.46 | 2.6/0.73 | 2.4/0.68 | 2.4/0.68 | 3.2 | 2.8 | 3.5 | 2.9 | 2.7 | 2.5 | 3.0 | 2.2 |
| DTGM023s | 3.5/1 | 2.5/0.71 | 3.9/1.1 | 3.5/1 | 3.5/1 | 3.2 | 2.8 | 3.5 | 2.9 | 2.7 | 2.5 | 3.0 | 2.2 |
| DTGM024s | 4.7/1.33 | 3.3/0.94 | 5.1/1.45 | 4.7/1.34 | 4.8/1.37 | 3.2 | 2.8 | 3.5 | 2.9 | 2.7 | 2.5 | 3.0 | 2.2 |
| DTGM022/2.8mms[3] | 1.3/0.37 | 0.9/0.26 | 1.6/0.46 | 1.3/0.37 | 1.4/0.4 | 3.2 | 2.8 | 3.5 | 2.9 | 2.7 | 2.5 | 3.0 | 2.2 |

**Note:** 1) the above data is based on clean system at ideal conditions; with impurities, accumulated in the filter,the capacity may decrease
2) R407C capacity is based on dew point conditions
3) Preliminary data for liquid line capacity for model DTGM022/2.8mms

## SELECTION FORMULAS

Filter Driers for liquid line are manufactured in compliance with ARI Standard 710. Maximum flow rate of liquid refrigerant at a differential pressure of 0,07bar (1psi) is indicated by kW (ton) which is based on the temperature of liquid refrigerant 30°C (86°F), the evaporating temperature of -15°C (5°F) and the following mass flow:

- 0,40 kg/min/kW (3.1 lb/min/ton) R134a
- 0,53 kg/min/kW (4.1 lb/min/ton) R404A, R507A
- 0,39 kg/min/kW (3.0 lb/min/ton) R407C
- 0,36 kg/min/kW (2.8 lb/min/ton) R410A

**Note:** Data on water absorption is based on the following EPD (method: ASHRAE Standard 63.1):

- 50ppm R134a
- 50ppm R404A
- 50ppm R407C
- 50ppm R410A
- 50ppm R507A

# 4 WAY REVERSING VALVES

*IMPROVES EFFICIENCY BY 5%*

*SHF SERIES 1KW TO 420 KW*

*WIDEST RANGE IN THE MARKET WITH SINGLE BODY DESIGN*

SANHUA

*"Yearly SANHUA supplies over 50 million four way reversing valves to the commercial and residential HVAC&R industry worldwide"*

*DISCOVER WHY*
**sanhuaeurope.com**

***SHF** SERIES*

# 4 WAY REVERSING VALVE

SHF series four-way reversing valves are applicable for heat pump systems such as central, unitary and room air conditioners to realize switching between cooling mode and heating mode by changing the flow path of refrigerant.

## FEATURES

- WIDE APPLICATION RANGE
- SUITABLE FOR COOLING CAPACITIES FROM 3.7 TO 435KW (R410A, CONDITION 2, ΔP=0.1BAR)
- SUITABLE FOR COOLING CAPACITIES FROM 3.8 TO 445KW (R290, CONDITION 2, ΔP=0.1BAR)
- SEVERAL DESIGNS AVAILABLE

### GENERAL SPECIFICATION

- Applicable for all common HCFC, HFC, HFO, HC refrigerants such as: R22, R407C, R404A, R507, R134a, R410A, R290, R1270, R600a, R32, R450A/R513A, R1234ze(E), R1234yf, R454B, R454C, R455A, R452A, R448A, R449A
- Medium temperature TS min./max.: -30°C / +135°C
- Ambient temperature min./max.: -30°C / +50°C
- Relative humidity: 0 to 95% RH
- Max. operating pressure PS: ≥4.5Mpa (45bar)
- Installation position:
  - Coil upwards or with body axis in horizontal alignment
  - Flow direction according to installation instruction
- Certifications: UL/CSA and declaration according to LVD or PED

# 4 WAY REVERSING VALVE

## TABLE 1: MODELS SUITABLE FOR USAGE ON SYSTEM WITH VARIABLE SPEED (INVERTER)

| General Characteristics | | | | | | | | | | | |
|---|---|---|---|---|---|---|---|---|---|---|---|
| Valve Model | Product Number | Type of System [Variable or Fixed Speed] | Ø Port | Kv | Connections ODF | | MOP | OPD | | PED Category | |
| | | | | | ØD | ØE/S/C | | Max. | Min. | Fluid | Fluid |
| | | | [mm] | [m³/h] | [inch] | [inch] | [MPa] | [MPa] | [MPa] | Group 2 | Group 1 |
| SHF(L)-3H-12U-52 | 10180953202 | Variable & Fixed | 7,4 | 1,5 | 1/4 | 5/16 | 4,7 | 4 | 0,1 | 4,3 | 4,3 |
| SHF(L)-4H-23U-52 | 10180952502 | Variable & Fixed | 8 | 1,6 | 5/16 | 3/8 | 4,7 | 4 | 0,1 | 4,3 | 4,3 |
| SHF(L)-7H-34U-52 | 10180952602 | Variable & Fixed | 11,1 | 2,9 | 3/8 | 1/2 | 4,7 | 4 | 0,1 | 4,3 | 4,3 |
| SHF(L)-7H-34-52 | 10180953302 | Variable & Fixed | 11,1 | 2,9 | 3/8 | 1/2 | 4,7 | 4 | 0,1 | 4,3 | 4,3 |
| SHF(L)-7H-35-52 | 10180950002 | Variable & Fixed | 11,1 | 2,9 | 3/8 | 5/8 | 4,7 | 4 | 0,1 | 4,3 | 4,3 |
| SHF(L)-11H-34U-52 | 10180953402 | Variable & Fixed | 11,5 | 4,5 | 3/8 | 1/2 | 4,7 | 4 | 0,1 | 4,3 | 4,3 |
| SHF(L)-11H-35U-52 | 10180952402 | Variable & Fixed | 11,5 | 4,5 | 3/8 | 5/8 | 4,7 | 4 | 0,1 | 4,3 | 4,3 |
| SHF(L)-11H-45D1-52 | 10180950102 | Variable & Fixed | 11,5 | 4,5 | 1/2 | 5/8 | 4,7 | 4 | 0,1 | 4,3 | 4,3 |
| SHF(L)-11H-46D1-52 | 10180953502 | Variable & Fixed | 11,5 | 4,5 | 1/2 | 3/4 | 4,7 | 4 | 0,1 | 4,3 | 4,3 |
| SHF-14A-45 | 10325083002 | Variable & Fixed | 13,5 | 6,6 | 1/2 | 5/8 | 4,7 | 4 | 0,1 | 4,3 | 4,3 |
| SHF-14A-46 | 10325051402 | Variable & Fixed | 13,5 | 6,6 | 1/2 | 3/4 | 4,7 | 4 | 0,1 | 4,3 | 4,3 |
| SHF-20D-46-02 | 10325051602 | Variable | 17,2 | 9,5 | 1/2 | 3/4 | 4,7 | 4 | 0,1 | 4,3 | 4,3 |
| SHF-20D-47-02 | 10325055702 | Variable | 17,2 | 9,9 | 1/2 | 7/8 | 4,7 | 4 | 0,1 | 4,3 | 4,3 |
| SHF-20D-57-02 | 10325060202 | Variable | 17,2 | 9,9 | 5/8 | 7/8 | 4,7 | 4 | 0,1 | 4,3 | 4,3 |
| SHF-20D-67-02 | 10325060102 | Variable | 17,2 | 9,9 | 3/4 | 7/8 | 4,7 | 4 | 0,1 | 4,3 | 4,3 |
| SHF-35B-47-04 | 10325058802 | Variable | 20 | 14,7 | 1/2 | 7/8 | 4,7 | 4 | 0,1 | 4,3 | 4,3 |
| SHF-35B-57-04 | 10325059002 | Variable | 20 | 14,7 | 5/8 | 7/8 | 4,7 | 4 | 0,1 | 4,3 | 4,3 |
| SHF-35B-59-04 | 10325059102 | Variable | 20 | 14,7 | 5/8 | 1 1/8 | 4,7 | 4 | 0,1 | 4,3 | 4,3 |
| SHF-35B-67-04 | 10325050802 | Variable | 20 | 14,7 | 3/4 | 7/8 | 4,7 | 4 | 0,1 | 4,3 | 4,3 |
| SHF-35B-69-04 | 10325058502 | Variable | 20,9 | 14,7 | 3/4 | 1 1/8 | 4,7 | 4 | 0,1 | 4,3 | 4,3 |
| SHF-35B-79-04 | 10325058302 | Variable | 20,9 | 14,7 | 7/8 | 1 1/8 | 4,7 | 4 | 0,1 | 4,3 | 4,3 |
| SHF-50A-79 | 10325059702 | Variable & Fixed | 22,8 | 18,3 | 7/8 | 1 1/8 | 4,5 | 4 | 0,1 | 4,3 | 4,3 |
| SHF(L)-70-810-20 | 10325049401 | Variable | 28,6 | 28,5 | 1 | 1 1/4 | 4,5 | 4 | 0,15 | 4,3 | II |
| SHF(L)-70-810-21 | 10325048501 | Variable | 28,6 | 28,5 | 1 | 1 1/4 | 4,5 | 4 | 0,15 | 4,3 | II |
| SHF(L)-70-911-20 | 10325048701 | Variable | 28,6 | 28,5 | 1 1/8 | 1 3/8 | 4,5 | 4 | 0,15 | 4,3 | II |
| SHF(L)-70-911-21 | 10325048901 | Variable | 28,6 | 28,5 | 1 1/8 | 1 3/8 | 4,5 | 4 | 0,15 | 4,3 | II |
| SHF(L)-70-913-25 | 10325049301 | Variable | 28,6 | 28,5 | 1 1/8 | 1 5/8 | 4,5 | 4 | 0,15 | I | II |
| SHF(L)-70-913-23 | 10325049101 | Variable | 28,6 | 28,5 | 1 1/8 | 1 5/8 | 4,5 | 4 | 0,15 | I | II |
| SHF(L)-100-911-30P | SHFX0006802 | Variable & Fixed | 34,8 | 40,5 | 1 1/8 | 1 3/8 | 4,5 | 4 | 0,15 | I | II |
| SHF(L)-100-911-31P | SHFX0006902 | Variable & Fixed | 34,8 | 40,5 | 1 1/8 | 1 3/8 | 4,5 | 4 | 0,15 | I | II |
| SHF(L)-100-913-30 | SHFX0007002 | Variable & Fixed | 34,8 | 40,5 | 1 1/8 | 1 5/8 | 4,5 | 4 | 0,15 | I | II |
| SHF(L)-100-913-31 | SHFX0007802 | Variable & Fixed | 34,8 | 40,5 | 1 1/8 | 1 5/8 | 4,5 | 4 | 0,15 | I | II |
| SHF(L)-100-1012-30P | SHFX0007102 | Variable & Fixed | 34,8 | 40,5 | 1 1/4 | 1 1/2 | 4,5 | 4 | 0,15 | I | II |
| SHF(L)-100-1012-31P | 10325080002 | Variable & Fixed | 34,8 | 40,5 | 1 1/4 | 1 1/2 | 4,5 | 4 | 0,15 | I | II |
| SHF(L)-100-1013-30P | SHFX0007202 | Variable & Fixed | 34,8 | 40,5 | 1 1/4 | 1 5/8 | 4,5 | 4 | 0,15 | I | II |
| SHF(L)-100-1013-31P | SHFX0007302 | Variable & Fixed | 34,8 | 40,5 | 1 1/4 | 1 5/8 | 4,5 | 4 | 0,15 | I | II |

# 4 WAY REVERSING VALVE

## TABLE 1: MODELS SUITABLE FOR USAGE ON SYSTEM WITH VARIABLE SPEED (INVERTER)

| General Characteristics | | | | | | | | | | | |
|---|---|---|---|---|---|---|---|---|---|---|---|
| Valve Model | Product Number | Type of System [Variable or Fixed Speed] | Ø Port | Kv | Connections ODF | | MOP | OPD | | PED Category | |
| | | | | | ØD | ØE/S/C | | Max. | Min. | Fluid | Fluid |
| | | | [mm] | [m³/h] | [inch] | [inch] | [MPa] | [MPa] | [MPa] | Group 2 | Group 1 |
| SHF(L)-140-1113 | 10325053402 | Variable & Fixed | 41 | 58,4 | 1 3/8 | 1 5/8 | 4,5 | 4 | 0,15 | I | II |
| SHF(L)-140-1213 | 10325053502 | Variable & Fixed | 41 | 58,4 | 1 1/2 | 1 5/8 | 4,5 | 4 | 0,15 | I | II |
| SHF(L)-140-1214 | 10325053302 | Variable & Fixed | 41 | 58,4 | 1 1/2 | 1 3/4 | 4,5 | 4 | 0,15 | I | II |
| SHF(L)-140-1313 | 10325053602 | Variable & Fixed | 41 | 58,4 | 1 5/8 | 1 5/8 | 4,5 | 4 | 0,15 | I | II |
| SHF(L)-175-1217 | 10325054902 | Variable & Fixed | 46,4 | 70,5 | 1 1/2 | 2 1/8 | 4,5 | 4 | 0,15 | I | II |
| SHF(L)-175-1317 | 10325055002 | Variable & Fixed | 46,4 | 70,5 | 1 5/8 | 2 1/8 | 4,5 | 4 | 0,15 | I | II |
| SHF(L)-210-1321 | 10325055102 | Variable & Fixed | 50 | 84,4 | 1 5/8 | 2 5/8 | 4,5 | 4 | 0,15 | I | II |
| SHF(L)-350-1721 | 10325055202 | Variable & Fixed | 59 | 138,4 | 2 1/8 | 2 5/8 | 4,5 | 4 | 0,15 | I | II |
| SHF(L)-420-2125 | 10325055302 | Variable & Fixed | 69 | 177 | 2 5/8 | 3 1/8 | 4,5 | 4 | 0,15 | I | II |

## TABLE 2: MODELS OPTIMIZED FOR USAGE ON SYSTEM WITH FIXED SPEED (ON/OFF COMPRESSORS)

| General Characteristics | | | | | | | | | | | |
|---|---|---|---|---|---|---|---|---|---|---|---|
| Valve Model | Product Number | Type of System [Variable or Fixed Speed] | Ø Port | Kv | Connections ODF | | MOP | OPD | | PED Category | |
| | | | | | ØD | ØE/S/C | | Max. | Min. | Fluid | Fluid |
| | | | [mm] | [m³/h] | [inch] | [inch] | [MPa] | [MPa] | [MPa] | Group 2 | Group 1 |
| SHF-20D-46-01 | 10325051502 | Fixed | 17,2 | 9,5 | 1/2 | 3/4 | 4,7 | 4 | 0,1 | 4,3 | 4,3 |
| SHF-20D-47-01 | 10325057402 | Fixed | 17,2 | 9,9 | 1/2 | 7/8 | 4,7 | 4 | 0,1 | 4,3 | 4,3 |
| SHF-20D-57-01 | 10325057302 | Fixed | 17,2 | 9,9 | 5/8 | 7/8 | 4,7 | 4 | 0,1 | 4,3 | 4,3 |
| SHF-20D-67-01 | 10325050102 | Fixed | 17,2 | 9,9 | 3/4 | 7/8 | 4,7 | 4 | 0,1 | 4,3 | 4,3 |
| SHF-35B-47-01 | 10325058702 | Fixed | 20 | 14,7 | 1/2 | 7/8 | 4,7 | 4 | 0,1 | 4,3 | 4,3 |
| SHF-35B-57-01 | 10325058902 | Fixed | 20 | 14,7 | 5/8 | 7/8 | 4,7 | 4 | 0,1 | 4,3 | 4,3 |
| SHF-35B-59-01 | 10325050202 | Fixed | 20 | 14,7 | 5/8 | 1 1/8 | 4,7 | 4 | 0,1 | 4,3 | 4,3 |
| SHF-35B-67-01 | 10325050702 | Fixed | 20 | 14,7 | 3/4 | 7/8 | 4,7 | 4 | 0,1 | 4,3 | 4,3 |
| SHF-35B-69-01 | 10325058402 | Fixed | 20,9 | 14,7 | 3/4 | 1 1/8 | 4,7 | 4 | 0,1 | 4,3 | 4,3 |
| SHF-35B-79-01 | 10325052702 | Fixed | 20,9 | 14,7 | 7/8 | 1 1/8 | 4,7 | 4 | 0,1 | 4,3 | 4,3 |
| SHF(L)-70-810-30P | 10325070702 | Fixed | 28,6 | 28,5 | 1 | 1 1/4 | 4,5 | 4 | 0,15 | 4,3 | II |
| SHF(L)-70-810-31P | 10325071502 | Fixed | 28,6 | 28,5 | 1 | 1 1/4 | 4,5 | 4 | 0,15 | 4,3 | II |
| SHF(L)-70-911-30P | 10325067802 | Fixed | 28,6 | 28,5 | 1 1/8 | 1 3/8 | 4,5 | 4 | 0,15 | 4,3 | II |
| SHF(L)-70-911-31 | 10325087702 | Fixed | 28,6 | 28,5 | 1 1/8 | 1 3/8 | 4,5 | 4 | 0,15 | 4,3 | II |
| SHF(L)-70-913-35 | 10325090702 | Fixed | 28,6 | 28,5 | 1 1/8 | 1 5/8 | 4,5 | 4 | 0,15 | I | II |
| SHF(L)-70-913-33 | 10325063002 | Fixed | 28,6 | 28,5 | 1 1/8 | 1 5/8 | 4,5 | 4 | 0,15 | I | II |

## NOMINAL OPERATING CONDITIONS

| Nominal Operating Conditions | Condition 1 | Condition 2 |
|---|---|---|
| Condensing Temperature $t_c$ | 38°C | 54,4°C |
| Evaporating Temperature $t_o$ | 5°C | 7,2°C |
| Superheat $\Delta t_{sc}$ | 5K | 5K |
| Subcooling $\Delta t_{sr}$ | 0K | 5K |

**Notes for Capacity Selection Tables:** 1) Pressure drop is valid for flow from ØC to ØS or from ØE to ØS
2) R407C data based on dew point conditions

# 4 WAY REVERSING VALVE

## CAPACITY TABLES AT CONDITION 1 [ΔP: 0.1 BAR]

| Capacity Selection Table (1/4) | | | | | | | | |
|---|---|---|---|---|---|---|---|---|
| Valve Model | Nominal Cooling Capacity [kW] (condition 1) - ΔP: 0.1 bar | | | | | | | |
| | R407C[2)] | R404A / R507 | R134a | R410A | R290 | R1270 | R600a | R32 |
| SHF(L)-3H | 3,2 | 2,9 | 2,6 | 4,1 | 4,1 | 4,6 | 2,6 | 5,3 |
| SHF(L)-4H | 3,4 | 3,1 | 2,8 | 4,4 | 4,4 | 4,9 | 2,8 | 5,6 |
| SHF(L)-7H | 6,2 | 5,6 | 5,1 | 7,9 | 8,0 | 8,8 | 5,0 | 10,2 |
| SHF(L)-11H | 9,6 | 8,7 | 7,9 | 12,3 | 12,4 | 13,7 | 7,8 | 15,8 |
| SHF-14A-xx | 14,1 | 12,8 | 11,5 | 18,1 | 18,2 | 20,0 | 11,4 | 23,1 |
| SHF-20D-46 | 20,2 | 18,4 | 16,6 | 26,0 | 26,2 | 28,9 | 16,4 | 33,3 |
| SHF-20D-xx | 21,1 | 19,1 | 17,3 | 27,1 | 27,3 | 30,1 | 17,1 | 34,7 |
| SHF-35B-xx | 31,3 | 28,4 | 25,7 | 40,2 | 40,6 | 44,6 | 25,3 | 51,5 |
| SHF-50A-xx | 39,0 | 35,4 | 32,0 | 50,1 | 50,5 | 55,6 | 31,5 | 64,1 |
| SHF(L)-70 | 60,7 | 55,1 | 49,8 | 78,0 | 78,7 | 86,6 | 49,1 | 99,8 |
| SHF(L)-100 | 86,3 | 78,3 | 70,8 | 110,8 | 111,9 | 123,0 | 69,8 | 141,8 |
| SHF(L)-140 | 124,4 | 112,9 | 102,1 | 159,8 | 161,3 | 177,4 | 100,7 | 204,5 |
| SHF(L)-175 | 150,2 | 136,3 | 123,2 | 192,9 | 194,7 | 214,1 | 121,5 | 246,9 |
| SHF(L)-210 | 179,8 | 163,1 | 147,5 | 231,0 | 233,1 | 256,4 | 145,5 | 295,6 |
| SHF(L)-350 | 294,8 | 267,5 | 241,9 | 378,7 | 382,2 | 420,4 | 238,5 | 484,7 |
| SHF(L)-420 | 377,1 | 342,1 | 309,4 | 484,4 | 488,9 | 537,6 | 305,1 | 619,8 |

| Capacity Selection Table (2/4) | | | | | | | | |
|---|---|---|---|---|---|---|---|---|
| Valve Model | Nominal Cooling Capacity [kW] (condition 1) - ΔP: 0.1 bar | | | | | | | |
| | R1234yf | R1234ze | R454B | R454C | R455A | R452A | R448A | R449A |
| SHF(L)-3H | 2,3 | 2,2 | 4,4 | 2,9 | 2,9 | 2,8 | 3,2 | 3,1 |
| SHF(L)-4H | 2,4 | 2,3 | 4,7 | 3,0 | 3,1 | 3,0 | 3,4 | 3,4 |
| SHF(L)-7H | 4,4 | 4,2 | 8,5 | 5,5 | 5,7 | 5,4 | 6,1 | 6,1 |
| SHF(L)-11H | 6,8 | 6,5 | 13,2 | 8,6 | 8,8 | 8,4 | 9,5 | 9,4 |
| SHF-14A-xx | 10,0 | 9,6 | 19,3 | 12,6 | 13,0 | 12,3 | 14,0 | 13,8 |
| SHF-20D-46 | 14,4 | 13,8 | 27,8 | 18,1 | 18,7 | 17,7 | 20,1 | 19,9 |
| SHF-20D-xx | 15,0 | 14,4 | 29,0 | 18,9 | 19,5 | 18,5 | 20,9 | 20,7 |
| SHF-35B-xx | 22,2 | 21,3 | 43,1 | 28,0 | 28,9 | 27,4 | 31,1 | 30,8 |
| SHF-50A-xx | 27,7 | 26,6 | 53,6 | 34,9 | 36,0 | 34,2 | 38,7 | 38,3 |
| SHF(L)-70 | 43,1 | 41,4 | 83,5 | 54,3 | 56,0 | 53,2 | 60,2 | 59,7 |
| SHF(L)-100 | 61,3 | 58,8 | 118,6 | 77,2 | 79,6 | 75,6 | 85,6 | 84,9 |
| SHF(L)-140 | 88,4 | 84,7 | 171,0 | 111,3 | 114,7 | 109,0 | 123,4 | 122,4 |
| SHF(L)-175 | 106,7 | 102,3 | 206,5 | 134,3 | 138,5 | 131,6 | 149,0 | 147,7 |
| SHF(L)-210 | 127,7 | 122,5 | 247,2 | 160,8 | 165,8 | 157,5 | 178,4 | 176,8 |
| SHF(L)-350 | 209,4 | 200,8 | 405,3 | 263,7 | 271,9 | 258,3 | 292,6 | 290,0 |
| SHF(L)-420 | 267,8 | 256,8 | 518,4 | 337,2 | 347,8 | 330,3 | 374,1 | 370,9 |

# 4 WAY REVERSING VALVE

## CAPACITY TABLES AT CONDITION 1 [ΔP: 0.2 BAR]

| Capacity Selection Table (3/4) | | | | | | | | |
|---|---|---|---|---|---|---|---|---|
| Valve Model | Nominal Cooling Capacity [kW] (condition 1) - ΔP: 0.2 bar | | | | | | | |
| | R407C[2)] | R404A / R507 | R134a | R410A | R290 | R1270 | R600a | R32 |
| SHF(L)-3H | 4,5 | 4,1 | 3,7 | 5,8 | 5,9 | 6,4 | 3,7 | 7,4 |
| SHF(L)-4H | 4,8 | 4,4 | 4,0 | 6,2 | 6,2 | 6,9 | 3,9 | 7,9 |
| SHF(L)-7H | 8,7 | 7,9 | 7,2 | 11,2 | 11,3 | 12,5 | 7,1 | 14,4 |
| SHF(L)-11H | 13,6 | 12,3 | 11,1 | 17,4 | 17,6 | 19,3 | 11,0 | 22,3 |
| SHF-14A-xx | 19,9 | 18,0 | 16,3 | 25,5 | 25,8 | 28,3 | 16,1 | 32,7 |
| SHF-20D-46 | 28,6 | 26,0 | 23,5 | 36,8 | 37,1 | 40,8 | 23,2 | 47,0 |
| SHF-20D-xx | 29,8 | 27,1 | 24,5 | 38,3 | 38,7 | 42,5 | 24,1 | 49,0 |
| SHF-35B-xx | 44,3 | 40,2 | 36,3 | 56,9 | 57,4 | 63,1 | 35,8 | 72,8 |
| SHF-50A-xx | 55,1 | 50,0 | 45,2 | 70,8 | 71,5 | 78,6 | 44,6 | 90,6 |
| SHF(L)-70 | 85,9 | 77,9 | 70,5 | 110,3 | 111,3 | 122,4 | 69,5 | 141,1 |
| SHF(L)-100 | 122,0 | 110,7 | 100,1 | 156,7 | 158,2 | 174,0 | 98,7 | 200,6 |
| SHF(L)-140 | 175,9 | 159,6 | 144,4 | 226,0 | 228,1 | 250,9 | 142,3 | 289,2 |
| SHF(L)-175 | 212,4 | 192,7 | 174,3 | 272,8 | 275,4 | 302,8 | 171,8 | 349,2 |
| SHF(L)-210 | 254,3 | 230,7 | 208,7 | 326,6 | 329,7 | 362,5 | 205,7 | 418,0 |
| SHF(L)-350 | 417,0 | 378,3 | 342,2 | 535,6 | 540,6 | 594,5 | 337,3 | 685,4 |
| SHF(L)-420 | 533,2 | 483,8 | 437,6 | 685,0 | 691,4 | 760,3 | 431,4 | 876,6 |

| Capacity Selection Table (4/4) | | | | | | | | |
|---|---|---|---|---|---|---|---|---|
| Valve Model | Nominal Cooling Capacity [kW] (condition 1) - ΔP: 0.2 bar | | | | | | | |
| | R1234yf | R1234ze | R454B | R454C | R455A | R452A | R448A | R449A |
| SHF(L)-3H | 3,2 | 3,1 | 6,2 | 4,0 | 4,2 | 4,0 | 4,5 | 4,4 |
| SHF(L)-4H | 3,4 | 3,3 | 6,6 | 4,3 | 4,4 | 4,2 | 4,8 | 4,7 |
| SHF(L)-7H | 6,2 | 6,0 | 12,0 | 7,8 | 8,1 | 7,7 | 8,7 | 8,6 |
| SHF(L)-11H | 9,6 | 9,2 | 18,6 | 12,1 | 12,5 | 11,9 | 13,5 | 13,3 |
| SHF-14A-xx | 14,1 | 13,5 | 27,3 | 17,8 | 18,3 | 17,4 | 19,7 | 19,6 |
| SHF-20D-46 | 20,3 | 19,5 | 39,3 | 25,6 | 26,4 | 25,1 | 28,4 | 28,1 |
| SHF-20D-xx | 21,2 | 20,3 | 41,0 | 26,7 | 27,5 | 26,1 | 29,6 | 29,3 |
| SHF-35B-xx | 31,5 | 30,2 | 60,9 | 39,6 | 40,8 | 38,8 | 43,9 | 43,6 |
| SHF-50A-xx | 39,2 | 37,6 | 75,8 | 49,3 | 50,9 | 48,3 | 54,7 | 54,2 |
| SHF(L)-70 | 61,0 | 58,5 | 118,0 | 76,8 | 79,2 | 75,2 | 85,2 | 84,4 |
| SHF(L)-100 | 86,7 | 83,1 | 167,7 | 109,1 | 112,5 | 106,9 | 121,1 | 120,0 |
| SHF(L)-140 | 125,0 | 119,8 | 241,9 | 157,3 | 162,3 | 154,1 | 174,6 | 173,0 |
| SHF(L)-175 | 150,8 | 144,7 | 292,0 | 189,9 | 195,9 | 186,1 | 210,8 | 208,9 |
| SHF(L)-210 | 180,6 | 173,2 | 349,6 | 227,4 | 234,5 | 222,8 | 252,3 | 250,1 |
| SHF(L)-350 | 296,1 | 284,0 | 573,2 | 372,9 | 384,6 | 365,3 | 413,7 | 410,1 |
| SHF(L)-420 | 378,7 | 363,2 | 733,1 | 476,9 | 491,8 | 467,1 | 529,1 | 524,5 |

# 4 WAY REVERSING VALVE

## CAPACITY TABLES AT CONDITION 2 [ΔP: 0.1 BAR]

| Capacity Selection Table (1/4) | | | | | | | | |
|---|---|---|---|---|---|---|---|---|
| Valve Model | Nominal Cooling Capacity [kW] (condition 2) - ΔP: 0.1 bar | | | | | | | |
| | R407C[2)] | R404A / R507 | R134a | R410A | R290 | R1270 | R600a | R32 |
| SHF(L)-3H | 2,9 | 2,5 | 2,4 | 3,7 | 3,8 | 4,2 | 2,4 | 4,9 |
| SHF(L)-4H | 3,1 | 2,7 | 2,6 | 3,9 | 4,0 | 4,5 | 2,6 | 5,2 |
| SHF(L)-7H | 5,6 | 4,8 | 4,7 | 7,1 | 7,3 | 8,2 | 4,7 | 9,5 |
| SHF(L)-11H | 8,7 | 7,5 | 7,3 | 11,1 | 11,3 | 12,7 | 7,2 | 14,7 |
| SHF-14A-xx | 12,8 | 11,0 | 10,6 | 16,2 | 16,6 | 18,6 | 10,6 | 21,6 |
| SHF-20D-46 | 18,5 | 15,8 | 15,3 | 23,3 | 23,9 | 26,8 | 15,3 | 31,1 |
| SHF-20D-xx | 19,2 | 16,5 | 16,0 | 24,3 | 24,9 | 27,9 | 15,9 | 32,4 |
| SHF-35B-xx | 28,6 | 24,5 | 23,7 | 36,1 | 36,9 | 41,4 | 23,7 | 48,1 |
| SHF-50A-xx | 35,6 | 30,4 | 29,5 | 45,0 | 46,0 | 51,6 | 29,5 | 59,8 |
| SHF(L)-70 | 55,4 | 47,4 | 45,9 | 70,0 | 71,6 | 80,3 | 45,9 | 93,2 |
| SHF(L)-100 | 78,7 | 67,4 | 65,3 | 99,5 | 101,8 | 114,2 | 65,2 | 132,4 |
| SHF(L)-140 | 113,5 | 97,2 | 94,2 | 143,5 | 146,8 | 164,6 | 94,1 | 191,0 |
| SHF(L)-175 | 137,0 | 117,3 | 113,7 | 173,2 | 177,2 | 198,7 | 113,6 | 230,5 |
| SHF(L)-210 | 164,0 | 140,4 | 136,1 | 207,4 | 212,1 | 237,9 | 136,0 | 276,0 |
| SHF(L)-350 | 268,9 | 230,3 | 223,1 | 340,0 | 347,8 | 390,1 | 222,9 | 452,6 |
| SHF(L)-420 | 343,9 | 294,5 | 285,4 | 434,8 | 444,8 | 498,9 | 285,1 | 578,8 |

| Capacity Selection Table (2/4) | | | | | | | | |
|---|---|---|---|---|---|---|---|---|
| Valve Model | Nominal Cooling Capacity [kW] (condition 2) - ΔP: 0.1 bar | | | | | | | |
| | R1234yf | R1234ze | R454B | R454C | R455A | R452A | R448A | R449A |
| SHF(L)-3H | 2,0 | 2,0 | 4,9 | 2,6 | 2,6 | 2,4 | 2,9 | 2,9 |
| SHF(L)-4H | 2,1 | 2,1 | 5,3 | 2,7 | 2,8 | 2,6 | 3,1 | 3,1 |
| SHF(L)-7H | 3,9 | 3,8 | 9,5 | 4,9 | 5,1 | 4,7 | 5,6 | 5,5 |
| SHF(L)-11H | 6,0 | 6,0 | 14,8 | 7,7 | 7,9 | 7,3 | 8,7 | 8,6 |
| SHF-14A-xx | 8,9 | 8,7 | 21,7 | 11,2 | 11,6 | 10,7 | 12,7 | 12,6 |
| SHF-20D-46 | 12,7 | 12,6 | 31,2 | 16,2 | 16,7 | 15,4 | 18,3 | 18,1 |
| SHF-20D-xx | 13,3 | 13,1 | 32,5 | 16,9 | 17,4 | 16,0 | 19,1 | 18,9 |
| SHF-35B-xx | 19,7 | 19,5 | 48,3 | 25,0 | 25,8 | 23,8 | 28,3 | 28,1 |
| SHF-50A-xx | 24,5 | 24,3 | 60,1 | 31,2 | 32,1 | 29,6 | 35,2 | 34,9 |
| SHF(L)-70 | 38,2 | 37,8 | 93,6 | 48,6 | 50,0 | 46,2 | 54,9 | 54,4 |
| SHF(L)-100 | 54,3 | 53,7 | 133,1 | 69,0 | 71,1 | 65,6 | 78,0 | 77,3 |
| SHF(L)-140 | 78,3 | 77,4 | 191,9 | 99,5 | 102,5 | 94,6 | 112,4 | 111,5 |
| SHF(L)-175 | 94,6 | 93,5 | 231,6 | 120,1 | 123,7 | 114,2 | 135,7 | 134,6 |
| SHF(L)-210 | 113,2 | 111,9 | 277,3 | 143,8 | 148,1 | 136,7 | 162,5 | 161,1 |
| SHF(L)-350 | 185,6 | 183,5 | 454,7 | 235,8 | 242,9 | 224,1 | 266,4 | 264,3 |
| SHF(L)-420 | 237,4 | 234,6 | 581,6 | 301,6 | 310,7 | 286,6 | 340,7 | 338,0 |

# 4 WAY REVERSING VALVE

## CAPACITY TABLES AT CONDITION 2 [ΔP: 0.2 BAR]

| Capacity Selection Table (3/4) | | | | | | | | |
|---|---|---|---|---|---|---|---|---|
| Valve Model | Nominal Cooling Capacity [kW] (condition 2) - ΔP: 0.2 bar | | | | | | | |
| | R407C[2)] | R404A / R507 | R134a | R410A | R290 | R1270 | R600a | R32 |
| SHF(L)-3H | 4,1 | 3,5 | 3,4 | 5,2 | 5,3 | 6,0 | 3,4 | 6,9 |
| SHF(L)-4H | 4,4 | 3,8 | 3,6 | 5,6 | 5,7 | 6,4 | 3,6 | 7,4 |
| SHF(L)-7H | 8,0 | 6,8 | 6,6 | 10,1 | 10,3 | 11,6 | 6,6 | 13,4 |
| SHF(L)-11H | 12,4 | 10,6 | 10,3 | 15,6 | 16,0 | 17,9 | 10,3 | 20,8 |
| SHF-14A-xx | 18,1 | 15,5 | 15,0 | 22,9 | 23,5 | 26,3 | 15,0 | 30,5 |
| SHF-20D-46 | 26,1 | 22,4 | 21,7 | 33,0 | 33,8 | 37,9 | 21,6 | 43,9 |
| SHF-20D-xx | 27,2 | 23,3 | 22,6 | 34,4 | 35,2 | 39,5 | 22,6 | 45,8 |
| SHF-35B-xx | 40,4 | 34,6 | 33,5 | 51,1 | 52,2 | 58,6 | 33,5 | 68,0 |
| SHF-50A-xx | 50,3 | 43,1 | 41,7 | 63,6 | 65,0 | 73,0 | 41,7 | 84,6 |
| SHF(L)-70 | 78,3 | 67,1 | 65,0 | 99,0 | 101,3 | 113,6 | 64,9 | 131,8 |
| SHF(L)-100 | 111,3 | 95,3 | 92,3 | 140,7 | 143,9 | 161,5 | 92,3 | 187,3 |
| SHF(L)-140 | 160,5 | 137,4 | 133,2 | 202,9 | 207,5 | 232,8 | 133,0 | 270,1 |
| SHF(L)-175 | 193,7 | 165,9 | 160,7 | 244,9 | 250,5 | 281,0 | 160,6 | 326,0 |
| SHF(L)-210 | 231,9 | 198,6 | 192,4 | 293,2 | 299,9 | 336,5 | 192,3 | 390,3 |
| SHF(L)-350 | 380,3 | 325,6 | 315,6 | 480,9 | 491,8 | 551,7 | 315,3 | 640,0 |
| SHF(L)-420 | 486,4 | 416,5 | 403,6 | 615,0 | 629,0 | 705,6 | 403,2 | 818,5 |

| Capacity Selection Table (4/4) | | | | | | | | |
|---|---|---|---|---|---|---|---|---|
| Valve Model | Nominal Cooling Capacity [kW] (condition 2) - ΔP: 0.2 bar | | | | | | | |
| | R1234yf | R1234ze | R454B | R454C | R455A | R452A | R448A | R449A |
| SHF(L)-3H | 2,8 | 2,8 | 7,0 | 3,6 | 3,7 | 3,4 | 4,1 | 4,1 |
| SHF(L)-4H | 3,0 | 3,0 | 7,4 | 3,9 | 4,0 | 3,7 | 4,4 | 4,3 |
| SHF(L)-7H | 5,5 | 5,4 | 13,5 | 7,0 | 7,2 | 6,6 | 7,9 | 7,8 |
| SHF(L)-11H | 8,5 | 8,4 | 20,9 | 10,8 | 11,2 | 10,3 | 12,3 | 12,2 |
| SHF-14A-xx | 12,5 | 12,4 | 30,7 | 15,9 | 16,4 | 15,1 | 18,0 | 17,8 |
| SHF-20D-46 | 18,0 | 17,8 | 44,1 | 22,9 | 23,6 | 21,8 | 25,9 | 25,7 |
| SHF-20D-xx | 18,8 | 18,6 | 46,0 | 23,9 | 24,6 | 22,7 | 27,0 | 26,7 |
| SHF-35B-xx | 27,9 | 27,6 | 68,3 | 35,4 | 36,5 | 33,7 | 40,0 | 39,7 |
| SHF-50A-xx | 34,7 | 34,3 | 85,0 | 44,1 | 45,4 | 41,9 | 49,8 | 49,4 |
| SHF(L)-70 | 54,1 | 53,4 | 132,4 | 68,7 | 70,7 | 65,3 | 77,6 | 77,0 |
| SHF(L)-100 | 76,8 | 75,9 | 188,2 | 97,6 | 100,5 | 92,8 | 110,3 | 109,4 |
| SHF(L)-140 | 110,8 | 109,5 | 271,4 | 140,7 | 145,0 | 133,8 | 159,0 | 157,7 |
| SHF(L)-175 | 133,7 | 132,2 | 327,6 | 169,9 | 175,0 | 161,5 | 191,9 | 190,4 |
| SHF(L)-210 | 160,1 | 158,2 | 392,2 | 203,4 | 209,5 | 193,3 | 229,8 | 227,9 |
| SHF(L)-350 | 262,5 | 259,5 | 643,1 | 333,5 | 343,5 | 317,0 | 376,8 | 373,7 |
| SHF(L)-420 | 335,8 | 331,8 | 822,5 | 426,5 | 439,4 | 405,4 | 481,9 | 477,9 |

# 4 WAY REVERSING VALVE

## DIMENSIONS - VALVES

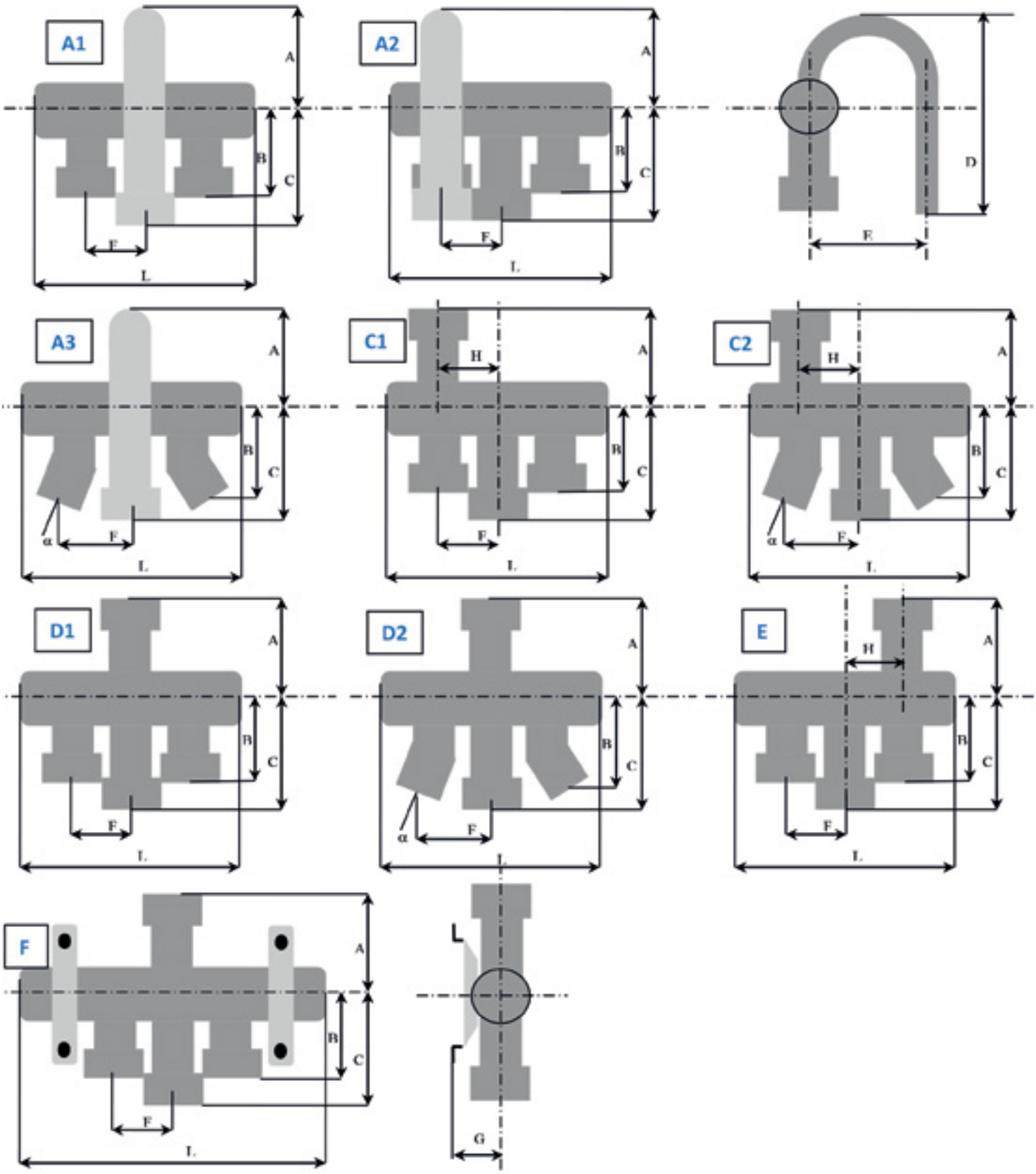

# 4 WAY REVERSING VALVE

## TABLE 3: MODELS SUITABLE FOR USAGE ON SYSTEM WITH VARIABLE SPEED (INVERTER)

| Dimensions - Valves | | | | | | | | | | | | |
|---|---|---|---|---|---|---|---|---|---|---|---|---|
| Valve Model | Valve Style | L | A | B | C | D | E | F | G | H | Angle α | Weight |
| | | [mm] | [mm] | [mm] | [mm] | [mm] | [mm] | [mm] | [mm] | [mm] | [°] | [kg] |
| SHF(L)-3H-12U-52 | A1 | 88,2 | 38,5 | 38 | 50 | 88,5 | 43 | 11 | - | - | 0 | 0,2 |
| SHF(L)-4H-23U-52 | A1 | 94,4 | 43 | 50 | 62 | 105 | 43 | 12 | - | - | 0 | 0,2 |
| SHF(L)-7H-34U-52 | A1 | 113 | 52 | 59 | 71 | 119 | 52 | 16 | - | - | 0 | 0,3 |
| SHF(L)-7H-34-52 | D1 | 113 | 52 | 59 | 71 | - | - | 16 | - | - | 0 | 0,3 |
| SHF(L)-7H-35-52 | D2 | 113 | 52 | 57 | 72 | - | - | 23,5 | - | 16 | 0 | 0,3 |
| SHF(L)-11H-34U-52 | A1 | 115,5 | 51 | 59 | 71 | 119 | 52 | 16 | - | - | 0 | 0,3 |
| SHF(L)-11H-35U-52 | A3 | 115,5 | 51 | 57 | 71 | 119 | 52 | 23,5 | - | - | 15 | 0,3 |
| SHF(L)-11H-45D1-52 | C2 | 117 | 52 | 62 | 87 | - | - | 25 | - | 16 | 15 | 0,32 |
| SHF(L)-11H-46D1-52 | C2 | 117 | 52 | 82 | 87 | - | - | 32,5 | - | 16 | 20 | 0,35 |
| SHF-14A-45 | D1 | 163 | 65 | 83 | 95 | - | - | 23,8 | - | - | 0 | 0,72 |
| SHF-14A-46 | D1 | 163 | 67 | 83 | 95 | - | - | 23,8 | - | - | 0 | 0,72 |
| SHF-20D-46-02 | D1 | 183,6 | 67 | 83 | 95 | - | - | 28,6 | - | - | 0 | 0,75 |
| SHF-20D-47-02 | D1 | 183,6 | 67 | 83 | 95 | - | - | 28,6 | - | - | 0 | 0,75 |
| SHF-20D-57-02 | D1 | 183,6 | 67 | 83 | 95 | - | - | 28,6 | - | - | 0 | 0,75 |
| SHF-20D-67-02 | D1 | 183,6 | 67 | 83 | 95 | - | - | 28,6 | - | - | 0 | 0,75 |
| SHF-35B-47-04 | D1 | 212,2 | 82 | 87 | 100 | - | - | 33 | - | - | 0 | 1,3 |
| SHF-35B-57-04 | D1 | 212,2 | 82 | 87 | 100 | - | - | 33 | - | - | 0 | 1,3 |
| SHF-35B-59-04 | D1 | 212,2 | 82 | 87 | 100 | - | - | 33 | - | - | 0 | 1,3 |
| SHF-35B-67-04 | D1 | 212,2 | 82 | 87 | 100 | - | - | 33 | - | - | 0 | 1,3 |
| SHF-35B-69-04 | D1 | 212,2 | 82 | 87 | 100 | - | - | 33 | - | - | 0 | 1,3 |
| SHF-35B-79-04 | D1 | 212,2 | 82 | 87 | 100 | - | - | 33 | - | - | 0 | 1,3 |
| SHF-50A-79 | D1 | 217 | 91 | 96 | 109 | - | - | 33 | - | - | 0 | 2,1 |
| SHF(L)-70-810-20 | D1 | 303 | 111 | 117 | 131 | - | - | 46 | - | - | 0 | 3 |
| SHF(L)-70-810-21 | F | 303 | 111 | 117 | 154 | - | - | 46 | 58 | - | 0 | 3 |
| SHF(L)-70-911-20 | D1 | 303 | 111 | 117 | 154 | - | - | 46 | - | - | 0 | 3 |
| SHF(L)-70-911-21 | F | 321 | 111 | 117 | 131 | - | - | 49 | 58 | - | 0 | 3,5 |
| SHF(L)-70-913-25 | D1 | 321 | 111 | 117 | 131 | - | - | 49 | - | - | 0 | 3,5 |
| SHF(L)-70-913-23 | F | 321 | 111 | 117 | 131 | - | - | 49 | 58 | - | 0 | 3,5 |
| SHF(L)-100-911-30P | D1 | 321 | 111 | 117 | 131 | - | - | 49 | - | - | 0 | 3,5 |
| SHF(L)-100-911-31P | F | 303 | 111 | 117 | 131 | - | - | 46 | 58 | - | 0 | 3 |
| SHF(L)-100-913-30 | D1 | 303 | 111 | 117 | 154 | - | - | 46 | - | - | 0 | 3 |
| SHF(L)-100-913-31 | F | 303 | 111 | 117 | 154 | - | - | 46 | 58 | - | 0 | 3 |
| SHF(L)-100-1012-30P | D1 | 321 | 111 | 117 | 131 | - | - | 49 | - | - | 0 | 3,5 |
| SHF(L)-100-1012-31P | F | 321 | 111 | 117 | 131 | - | - | 49 | 58 | - | 0 | 3,5 |
| SHF(L)-100-1013-30P | D1 | 321 | 111 | 117 | 131 | - | - | 49 | - | - | 0 | 3,5 |
| SHF(L)-100-1013-31P | F | 321 | 111 | 117 | 131 | - | - | 49 | 58 | - | 0 | 3,5 |
| SHF(L)-140-1213 | F | 390 | 135,6 | 148,7 | 168,7 | - | - | 58 | 63 | - | 0 | 7,2 |
| SHF(L)-140-1214 | F | 390 | 135,6 | 148,7 | 168,7 | - | - | 58 | 63 | - | 0 | 7,2 |
| SHF(L)-140-1313 | F | 390 | 135,6 | 148,7 | 168,7 | - | - | 58 | 63 | - | 0 | 7,2 |
| SHF(L)-175-1217 | F | 390 | 135,6 | 148,7 | 198 | - | - | 58 | 63 | - | 0 | 7,6 |
| SHF(L)-175-1317 | F | 390 | 135,6 | 148,7 | 198 | - | - | 58 | 63 | - | 0 | 7,6 |
| SHF(L)-210-1321 | F | 452 | 135,6 | 148,7 | 198 | - | - | 71,5 | 63 | - | 0 | 8,7 |
| SHF(L)-350-1721 | F | 531 | 176,5 | 184 | 240 | - | - | 75 | 82,5 | - | 0 | 22 |
| SHF(L)-420-2125 | F | 611,7 | 176,5 | 184 | 240 | - | - | 93 | 82,5 | - | 0 | 26 |

# 4 WAY REVERSING VALVE

## TABLE 4: MODELS OPTIMIZED FOR USAGE ON SYSTEM WITH FIXED SPEED (ON/OFF COMPRESSORS)

| Dimensions - Valves | | | | | | | | | | | | |
|---|---|---|---|---|---|---|---|---|---|---|---|---|
| Valve Model | Valve Style | L | A | B | C | D | E | F | G | H | Angle α | Weight |
| | | [mm] | [mm] | [mm] | [mm] | [mm] | [mm] | [mm] | [mm] | [mm] | [°] | [kg] |
| SHF-20D-46-01 | D1 | 183,6 | 67 | 83 | 95 | - | - | 28,6 | - | - | 0 | 0,75 |
| SHF-20D-47-01 | D1 | 183,6 | 67 | 83 | 95 | - | - | 28,6 | - | - | 0 | 0,75 |
| SHF-20D-57-01 | D1 | 183,6 | 67 | 83 | 95 | - | - | 28,6 | - | - | 0 | 0,75 |
| SHF-20D-67-01 | D1 | 183,6 | 67 | 83 | 95 | - | - | 28,6 | - | - | 0 | 0,75 |
| SHF-35B-47-01 | D1 | 212,2 | 82 | 87 | 100 | - | - | 33 | - | - | 0 | 1,3 |
| SHF-35B-57-01 | D1 | 212,2 | 82 | 87 | 100 | - | - | 33 | - | - | 0 | 1,3 |
| SHF-35B-59-01 | D1 | 212,2 | 82 | 87 | 100 | - | - | 33 | - | - | 0 | 1,3 |
| SHF-35B-67-01 | D1 | 212,2 | 82 | 87 | 100 | - | - | 33 | - | - | 0 | 1,3 |
| SHF-35B-69-01 | D1 | 212,2 | 82 | 87 | 100 | - | - | 33 | - | - | 0 | 1,3 |
| SHF-35B-79-01 | D1 | 212,2 | 82 | 87 | 100 | - | - | 33 | - | - | 0 | 1,3 |
| SHF(L)-70-810-30P | D1 | 303 | 111 | 117 | 131 | - | - | 46 | - | - | 0 | 3 |
| SHF(L)-70-810-31P | D1 | 303 | 111 | 117 | 131 | - | - | 46 | - | - | 0 | 3 |
| SHF(L)-70-911-30P | D1 | 303 | 111 | 117 | 154 | - | - | 46 | - | - | 0 | 3 |
| SHF(L)-70-911-31 | F | 321 | 111 | 117 | 131 | - | - | 49 | 58 | - | 0 | 3,5 |
| SHF(L)-70-913-35 | D1 | 321 | 111 | 117 | 131 | - | - | 49 | - | - | 0 | 3,5 |
| SHF(L)-70-913-33 | F | 321 | 111 | 117 | 131 | - | - | 49 | 58 | - | 0 | 3,5 |

# 4 WAY REVERSING VALVE

| Coil Characteristics | | | | | | | | | | | | |
|---|---|---|---|---|---|---|---|---|---|---|---|---|
| Coil Model [1] | Winding Code | Part Number | Electrical Function/ Connection Type | Cable Length | Power Supply | Rated Voltage | Power Consumption AC 50Hz | Power Consumption AC 60Hz | Power Consumption DC | Protection Clas | Insulat. Class | Max. Op. Temp. |
| | | | | [mm] | [-] | [V] | [W] | [W] | [W] | [-] | [-] | [°C] |
| SQ-A37024-000004 | SHF-4-10L25 | 10805357502 | Lead Wires | 500 | AC | 24 | 4,5 | 3,5 | - | IP54 | F[2] | 155 |
| SQ-A37100-000001 | SHF-4-10L21 | 10805357602 | Lead Wires | 500 | AC | 100 | 4,5 | 3,5 | - | | | |
| SQ-A37115-000013 | SHF-4-10L24 | 10805358302 | Lead Wires | 500 | AC | 115 | 4,5 | 3,5 | - | | | |
| SQ-A37200-000001 | SHF-4-10L22 | 10805357702 | Lead Wires | 500 | AC | 200 | 4,5 | 3,5 | - | | | |
| SQ-A3720D-000001 | SHF-4-10L34 | 10805357902 | Lead Wires | 500 | AC | 200 | / | 3,5 | - | | | |
| SQ-A37220-000001 | SHF-4-10L3 | 10805341402 | Lead Wires | 500 | AC | 220 | 6 | 5 | - | | | |
| SQ-A3722G-000001 | SHF-4-10L3 | 10805341302 | Lead Wires | 500 | AC | 220-240 | 4,5 | 3,5 | - | | | |
| SQ-A3726H-000003 | SHF-4-10L26 | 10805359202 | Lead Wires | 500 | AC | 265-277 | 4,5 | 3,5 | - | | | |
| SQ-A3722G-000057 | SHF-4-10L3 | 10805349102 | Lead Wires | 1500 | AC | 220-240 | 4,5 | 3,5 | - | | | |
| SQ-A37115-000028 | SHF-4-10L24 | 10805372902 | Lead Wires | 1500 | AC | 115 | 4,5 | 3,5 | - | | | |
| SQ-A37024-000001 | SHF-4-10L25 | 10805355602 | Lead Wires | 1550 | AC | 24 | 4,5 | 3,5 | - | | | |
| SQ-A5022G-000001 | SQ-A5022G | 10805356002 | Spade (Faston) [3] | - | AC | 220-240 | 4,5 | 3,5 | - | IP00 | F | 155 |
| SQ-A5011A-000001 | SQ-A5011A | 10805355902 | Spade (Faston) [3] | - | AC | 110-120 | 4,5 | 3,5 | - | | | |
| SQ-A50024-000001 | SQ-A50024 | 10805355802 | Spade (Faston) [3] | - | AC | 24 | 4,5 | 3,5 | - | | | |
| SQ-D44 012-00 00015) | SHF-4-10FA8 | 10805231802 | Spade (Faston) [3] | - | DC | 12 | - | - | 10 | | | |
| SQ-D44 024-00 00015) | SHF-4-10FA9 | 10805070102 | Spade (Faston) [3] | - | DC | 24 | - | - | 11 | | | |
| SQ-A27 100-00 0001 | - | 10805063202 | Bi-stable/Lead W. | 500 | AC | 100 | 18 | 18 | - | IP54 | B | 130 |
| SQ-A27 200-00 0001 | - | 10805063802 | Bi-stable/Lead W. | 500 | AC | 200 | 18 | 18 | - | | | |
| SQ-A27 20K-00 0001 | - | 10805222902 | Bi-stable/Lead W. | 500 | AC | 220-240 | 18 | 18 | - | | | |
| SQ-D27 012-00 0001 | - | 10805069302 | Bi-stable/Lead W. | 500 | DC | 12 | - | - | 20 | | | |

**Note:** Max ambient temperature up to +50°C

1) Every coil is applicable to all above specified valve models

2a) SQ-A37: insulation class according to UL is "B". Max Operating temperature: +130°C

2b) SQ-A37: insulation class according to VDE is "F". Max Operating temperature: +155°C

3) Wire Harness for coil with Fast-on connector available as accessory

4) SQ-A27 coils can be used only with SHF valves from size 3 to size 100

5) SQ-D44 cannot be used in combination with SHF valves installed in systems operating with A2L and A3 refrigerants.

## ACCESSORY

| Wire Harness | | |
|---|---|---|
| Model | Part Number | Cable Length [mm] |
| SQ-000000-090028 | 20805136301 | 1200 |
| SQ-000000-090029 | 20805149201 | 2000 |

# 4 WAY REVERSING VALVE

## DIMENSIONS - COILS

Coils with Lead Wires (SQ-A37 Series)

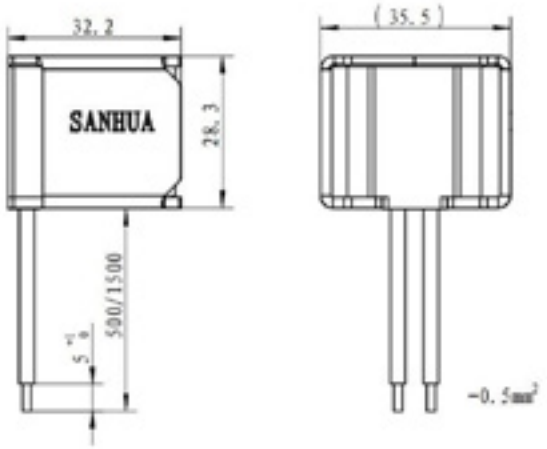


Bistable Coils (SQ-A/D27 Series)

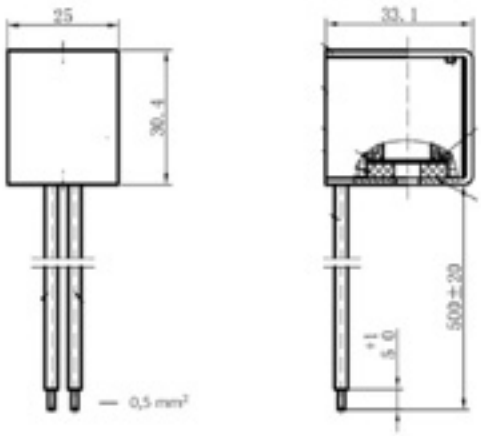


Coils with Spade Connections (SQ-D44 Series)

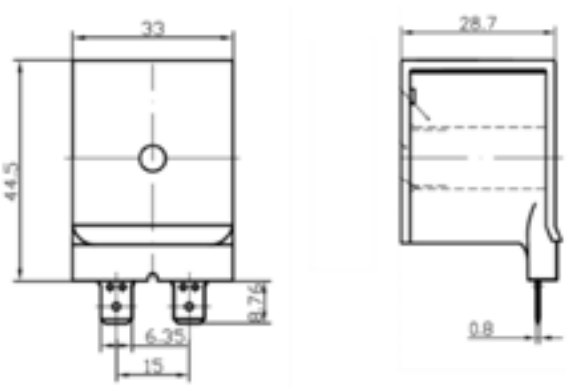


Coils with Spade Connections (SQ-A50 Series)

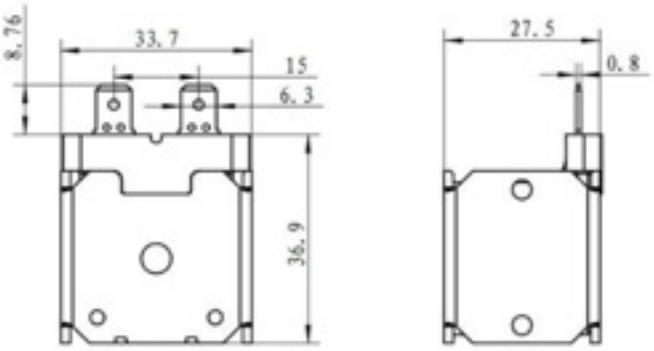


Wire Harness (SQ-000000-0900xx)

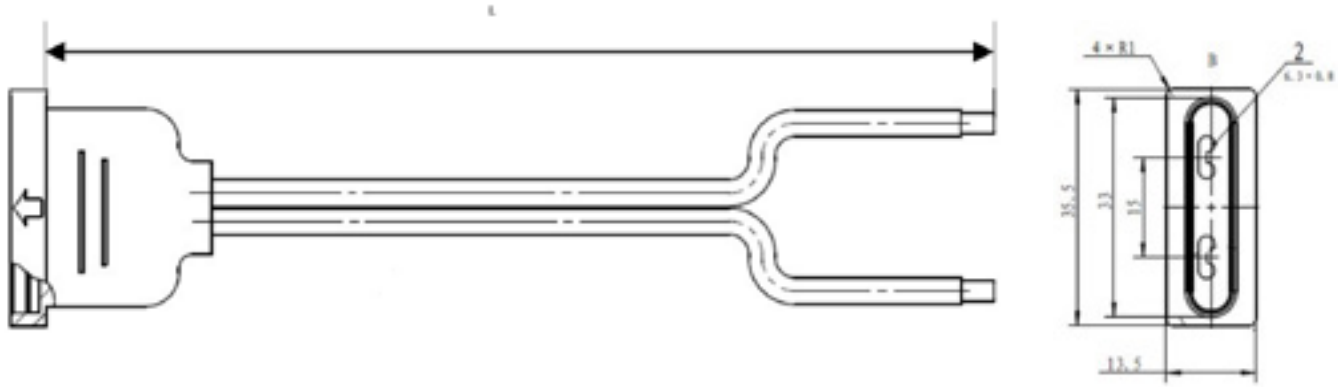

# SANHUA

**SANHUA** INTERNATIONAL
**info@sanhuaeurope.com**

## Technical information
## sanhuaeurope.com

**DOWNLOAD NOW**
*OUR ONLINE*
**CATALOGUE**

Certificate of registration
ISO 14001:2004

Certificate of registration
ISO 9001:2008

REACH
NR. 1907/2006
CONFORMITY DECLARATION

**BEST SUPPLIER AWARDS**

B/S/H/ Carrier TRANE

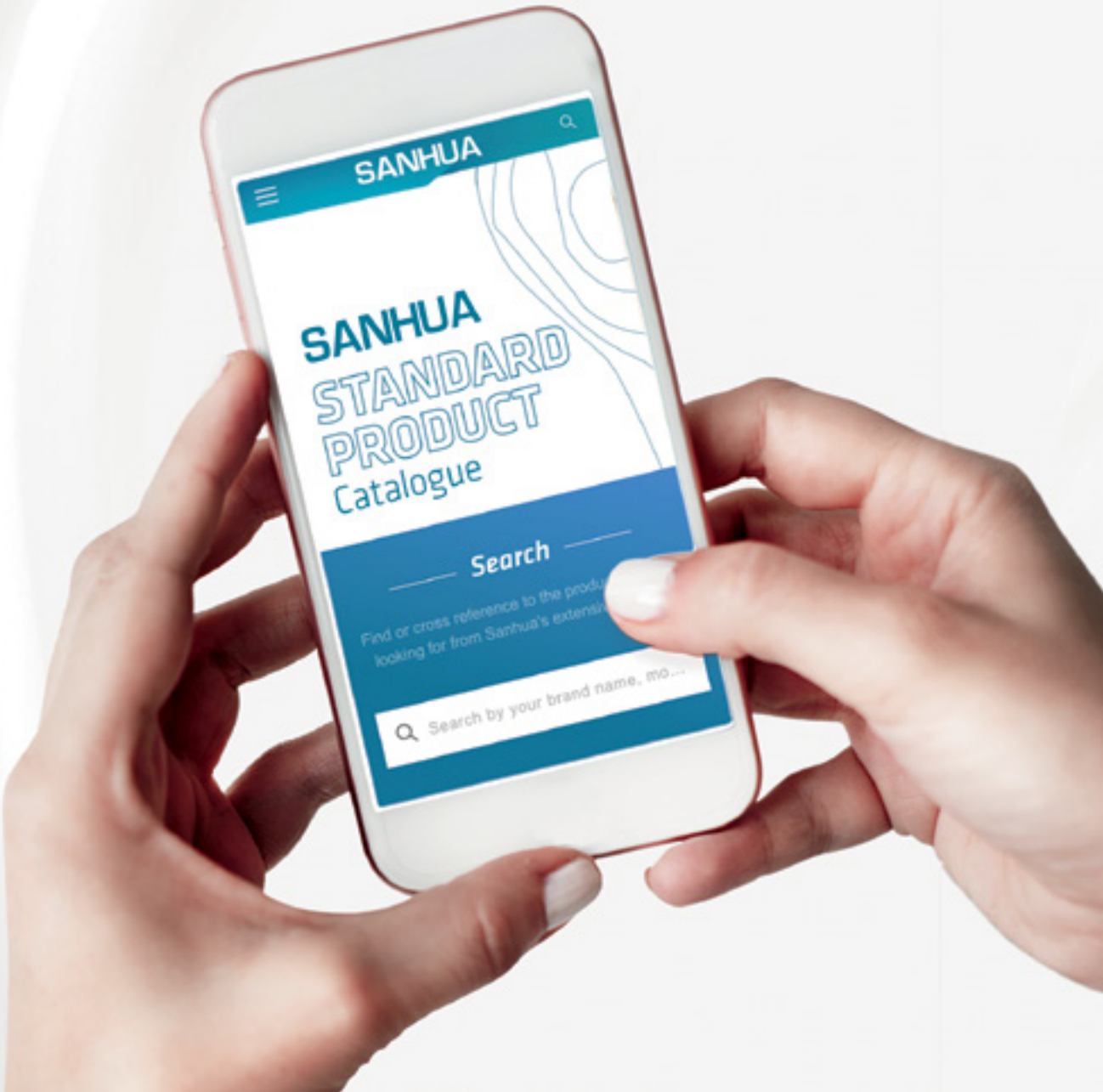

***SHF-G*** *SERIES*

# 4 WAY REVERSING VALVE

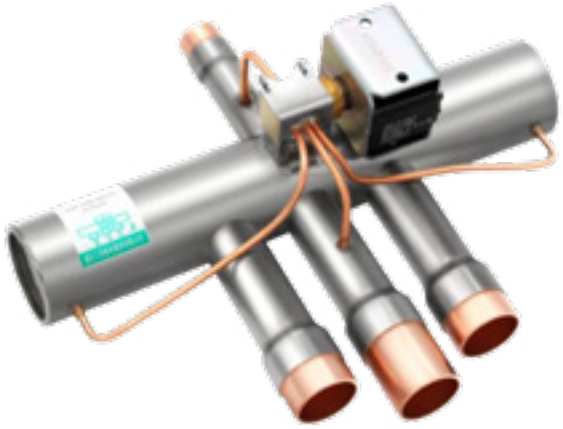

SHF-G series four-way reversing valves are applicable for heat pump systems such as central, unitary air conditioners to realize switching between cooling mode and heating mode by changing the flow path of refrigerant. The main body in stainless steel guarantees an increased robustness with a design pressure suitable for all the refrigerant types and the certainly of a lead-free material. A Sanhua patent is related to the bi-metal joint of the four main connections: the pipes material is stainless steel, but the terminal of each connection is in pure copper to allow an easy brazing procedure.

## FEATURES

- FULLY STAINLESS-STEEL VALVE BODY AND CONNECTION TUBE MAIN PART, HIGH PRESSURE STRENGTH, LOW WEIGHT AND BETTER ANTI-VIBRATION PERFORMANCE
- LOWER HEAT TRANSFER LOSS THAN BRASS VALVE, ENERGY EFFICIENT
- BRASS CONNECTOR FOR EASY WELDING
- SUITABLE FOR COOLING CAPACITIES FROM 4.2 TO 77.3 KW (R410A, CONDITION 2, ΔP: 0.1 BAR)

### GENERAL SPECIFICATION

- Applicable for all common HCFC, HFC, HFO, HC refrigerants such as: R22, R134a, R404A, R407A/C/F, R410A, R507A, R448A, R449A, R450A, R452A, R513A, R32, R1234yf, R1234ze, R454A/B/C, R455A, R290, R1270, R600a, R744
- Ambient temperature range: from -30°C to +50°C
- Medium temperature TS min./max.: -30°C / +135°C
- Relative humidity: 0 to 95% RH
- Max. operating pressure - PS: 4.9 MPa (49 bar) for sizes 4, 7, 13; PS: 4.7 MPa (47 bar) for remaining sizes
- Installation position:
  - Coil upwards or with body axis in horizontal alignment
  - Flow direction according to installation instruction
- Certifications:
  - Declaration of conformity according to LVD and PED
  - Certification issued by Notify Body according to EN60730 and EN60335-2-24/40/89
  - UL/CSA certification (including A2L and A3 refrigerants)

# 4 WAY REVERSING VALVE

## TABLE 1: MODELS SUITABLE FOR USAGE ON SYSTEM WITH VARIABLE SPEED (INVERTER)

| General Characteristics | | | | | | | | | | | |
|---|---|---|---|---|---|---|---|---|---|---|---|
| Valve Model | Product Number | Type of System [Variable or Fixed Speed] | Ø Port | Kv | Connections ODF | | MOP | OPD | | PED Category | |
| | | | | | ØD | ØE/S/C | | Max. | Min. | Fluid | Fluid |
| | | | [mm] | [m³/h] | [inch] | [inch] | [MPa] | [MPa] | [MPa] | Group 2 | Group 1 |
| SHF(G)-4H-23U-AE | 10180963602 | UNIVERSAL | 8 | 1.54 | 1/4" | 3/8 | 4.9 | 4 | 0.1 | Art.4.3 | Art.4.3 |
| SHF(G)-7H-34U-AE | 10180963502 | UNIVERSAL | 10.4 | 3.17 | 3/8 | 1/2 | 4.9 | 4 | 0.1 | Art.4.3 | Art.4.3 |
| SHF(G)-13H-45-E | 10180960302 | UNIVERSAL | 12.5 | 4.97 | 1/2 | 5/8 | 4.9 | 4 | 0.1 | Art.4.3 | Art.4.3 |
| SHF-20D-46G36 | 10325083202 | Variable | 16.9 | 9.9 | 1/2 | 3/4 | 4.7 | 4 | 0.1 | Art.4.3 | Art.4.3 |
| SHF-20D-47G36 | 10325091802 | Variable | 16.9 | 9.9 | 1/2 | 7/8 | 4.7 | 4 | 0.1 | Art.4.3 | Art.4.3 |
| SHF-35B-67G48 | 10325098602 | Variable | 21 | 14.7 | 3/4 | 7/8 | 4.7 | 4 | 0.15 | Art.4.3 | Art.4.3 |
| SHF-35B-79G48 | 10325088902 | Variable | 21 | 14.7 | 7/8 | 1 1/8 | 4.7 | 4 | 0.15 | Art.4.3 | Art.4.3 |
| SHF-50-79G44 | 10325088302 | Variable | 23 | 18.3 | 7/8 | 1 1/8 | 4.7 | 4 | 0.15 | Art.4.3 | Art.4.3 |
| SHF(L)-70-810G34 | 10325084902 | Variable | 28.6 | 28.5 | 1 | 1 1/4 | 4.7 | 4 | 0.15 | Cat.II | Art.4.3 |
| SHF(L)-70-910G34 | 10325089302 | Variable | 28.6 | 28.5 | 1 1/8 | 1 1/4 | 4.7 | 4 | 0.15 | Cat.II | Art.4.3 |
| SHF(L)-70-911G34 | 10325090902 | Variable | 28.6 | 28.5 | 1 1/8 | 1 3/8 | 4.7 | 4 | 0.15 | Cat.II | Art.4.3 |

## TABLE 2: MODELS OPTIMIZED FOR USAGE ON SYSTEM WITH FIXED SPEED (ON/OFF COMPRESSORS)

| General Characteristics | | | | | | | | | | | |
|---|---|---|---|---|---|---|---|---|---|---|---|
| Valve Model | Product Number | Type of System [Variable or Fixed Speed] | Ø Port | Kv | Connections ODF | | MOP | OPD | | PED Category | |
| | | | | | ØD | ØE/S/C | | Max. | Min. | Fluid | Fluid |
| | | | [mm] | [m³/h] | [inch] | [inch] | [MPa] | [MPa] | [MPa] | Group 2 | Group 1 |
| SHF-20D-46G35 | 10325084302 | FIXED | 16.9 | 9.9 | 1/2 | 3/4 | 4.7 | 4 | 0.1 | Art.4.3 | Art.4.3 |
| SHF-20D-47G35 | 10325091702 | FIXED | 16.9 | 9.9 | 1/2 | 7/8 | 4.7 | 4 | 0.1 | Art.4.3 | Art.4.3 |
| SHF-35B-67G49 | 10325098702 | FIXED | 21 | 14.7 | 3/4 | 7/8 | 4.7 | 4 | 0.15 | Art.4.3 | Art.4.3 |
| SHF-35B-79G49 | 10325098402 | FIXED | 21 | 14.7 | 7/8 | 1 1/8 | 4.7 | 4 | 0.15 | Art.4.3 | Art.4.3 |
| SHF-50-79G45 | 10325087302 | FIXED | 23 | 18.3 | 7/8 | 1 1/8 | 4.7 | 4 | 0.15 | Art.4.3 | Art.4.3 |
| SHF(L)-70-810G35 | 10325084802 | FIXED | 28.6 | 28.5 | 1 | 1 1/4 | 4.7 | 4 | 0.15 | Cat.II | Art.4.3 |
| SHF(L)-70-910G35 | 10325092702 | FIXED | 28.6 | 28.5 | 1 1/8 | 1 1/4 | 4.7 | 4 | 0.15 | Cat.II | Art.4.3 |
| SHF(L)-70-911G35 x | 10325100102 | FIXED | 28.6 | 28.5 | 1 1/8 | 1 3/8 | 4.7 | 4 | 0.15 | Cat.II | Art.4.3 |

## NOMINAL OPERATING CONDITIONS

| Nominal Operating Conditions | Condition 1 | Condition 2 |
|---|---|---|
| Condensing Temperature $t_c$ | 38°C | 54.4°C |
| Evaporating Temperature $t_o$ | 5°C | 7.2°C |
| Superheat $\Delta t_{sh}$ | 5K | 5K |
| Subcooling $\Delta t_{sc}$ | 0K | 5K |

**Notes for Capacity Selection Tables:** 1) Pressure drop is valid for flow from ØC to ØS or from ØE to ØS
2) R407C data based on dew point conditions

# 4 WAY REVERSING VALVE

## CAPACITY TABLES AT CONDITION 1 [ΔP: 0.1 BAR]

| Capacity Selection Table (1/4) | | | | | | | | |
|---|---|---|---|---|---|---|---|---|
| Valve Model | Nominal Cooling Capacity [kW] (condition 1) - ΔP: 0.1 bar | | | | | | | |
| | R407C[2)] | R404A/R507 | R134a | R410A | R290 | R1270 | R600a | R32 |
| SHF 4G | 3.2 | 2.9 | 2.7 | 4.2 | 4.2 | 4.6 | 2.6 | 5.4 |
| SHF 7G | 6.7 | 6.0 | 5.5 | 8.6 | 8.7 | 9.5 | 5.4 | 11.1 |
| SHF 13G | 10.5 | 9.4 | 8.6 | 13.5 | 13.6 | 14.9 | 8.5 | 17.3 |
| SHF 20G | 20.9 | 18.8 | 17.2 | 26.8 | 27.1 | 29.8 | 16.9 | 34.5 |
| SHF 35G | 31.0 | 27.9 | 25.5 | 39.8 | 40.2 | 44.2 | 25.1 | 51.2 |
| SHF 50G | 38.5 | 34.8 | 31.7 | 49.6 | 50.1 | 55.0 | 31.3 | 63.8 |
| SHF 70G | 60.0 | 54.2 | 49.4 | 77.3 | 78.0 | 85.7 | 48.8 | 99.4 |

| Capacity Selection Table (2/4) | | | | | | | | |
|---|---|---|---|---|---|---|---|---|
| Valve Model | Nominal Cooling Capacity [kW] (condition 1) - ΔP: 0.1 bar | | | | | | | |
| | R1234yf | R1234ze | R454B | R454C | R455A | R452A | R448A | R449A |
| SHF 4G | 2.3 | 2.2 | 4.5 | 2.9 | 3.0 | 2.8 | 3.3 | 3.2 |
| SHF 7G | 4.7 | 4.5 | 9.2 | 6.0 | 6.2 | 5.8 | 6.7 | 6.6 |
| SHF 13G | 7.4 | 7.1 | 14.4 | 9.3 | 9.6 | 9.1 | 10.5 | 10.4 |
| SHF 20G | 14.7 | 14.2 | 28.8 | 18.6 | 19.2 | 18.2 | 20.9 | 20.7 |
| SHF 35G | 21.9 | 21.1 | 42.7 | 27.7 | 28.5 | 27.0 | 31.1 | 30.8 |
| SHF 50G | 27.3 | 26.2 | 53.2 | 34.4 | 35.5 | 33.6 | 38.7 | 38.3 |
| SHF 70G | 42.4 | 40.9 | 82.9 | 53.6 | 55.3 | 52.4 | 60.2 | 59.7 |

## CAPACITY TABLES AT CONDITION 1 [ΔP: 0.2 BAR]

| Capacity Selection Table (3/4) | | | | | | | | |
|---|---|---|---|---|---|---|---|---|
| Valve Model | Nominal Cooling Capacity [kW] (condition 1) - ΔP: 0.2 bar | | | | | | | |
| | R407C[2)] | R404A/R507 | R134a | R410A | R290 | R1270 | R600a | R32 |
| SHF 4G | 4.6 | 4.1 | 3.8 | 5.9 | 6.0 | 6.5 | 3.7 | 7.6 |
| SHF 7G | 9.4 | 8.5 | 7.8 | 12.2 | 12.3 | 13.5 | 7.7 | 15.6 |
| SHF 13G | 14.8 | 13.4 | 12.2 | 19.1 | 19.2 | 21.1 | 12.0 | 24.5 |
| SHF 20G | 29.5 | 26.6 | 24.3 | 38.0 | 38.3 | 42.1 | 23.9 | 48.8 |
| SHF 35G | 43.8 | 39.5 | 36.0 | 56.4 | 56.9 | 62.5 | 35.6 | 72.5 |
| SHF 50G | 54.5 | 49.2 | 44.9 | 70.2 | 70.8 | 77.8 | 44.3 | 90.2 |
| SHF 70G | 84.9 | 76.6 | 69.9 | 109.3 | 110.3 | 121.2 | 68.9 | 140.5 |

| Capacity Selection Table (4/4) | | | | | | | | |
|---|---|---|---|---|---|---|---|---|
| Valve Model | Nominal Cooling Capacity [kW] (condition 1) - ΔP: 0.2 bar | | | | | | | |
| | R1234yf | R1234ze | R454B | R454C | R455A | R452A | R448A | R449A |
| SHF 4G | 3.2 | 3.1 | 6.3 | 4.1 | 4.2 | 4.0 | 4.6 | 4.6 |
| SHF 7G | 6.7 | 6.4 | 13.0 | 8.4 | 8.7 | 8.2 | 9.5 | 9.4 |
| SHF 13G | 10.5 | 10.1 | 20.4 | 13.2 | 13.6 | 12.9 | 14.9 | 14.7 |
| SHF 20G | 20.9 | 20.1 | 40.7 | 26.3 | 27.2 | 25.7 | 29.6 | 29.3 |
| SHF 35G | 31.0 | 29.8 | 60.4 | 39.1 | 40.3 | 38.2 | 43.9 | 43.6 |
| SHF 50G | 38.5 | 37.1 | 75.2 | 48.7 | 50.2 | 47.6 | 54.7 | 54.2 |
| SHF 70G | 60.0 | 57.8 | 117.2 | 75.8 | 78.2 | 74.1 | 85.2 | 84.4 |

# 4 WAY REVERSING VALVE

## CAPACITY TABLES AT CONDITION 2 [ΔP: 0.1 BAR]

| Capacity Selection Table (1/4) | | | | | | | | |
|---|---|---|---|---|---|---|---|---|
| Valve Model | Nominal Cooling Capacity [kW] (condition 2) - ΔP: 0.1 bar | | | | | | | |
| | R407C[2)] | R404A/R507 | R134a | R410A | R290 | R1270 | R600a | R32 |
| SHF 4G | 3.0 | 2.6 | 2.5 | 3.8 | 3.9 | 4.3 | 2.5 | 5.0 |
| SHF 7G | 6.2 | 5.3 | 5.1 | 7.8 | 8.0 | 8.8 | 5.1 | 10.4 |
| SHF 13G | 9.7 | 8.3 | 8.0 | 12.2 | 12.5 | 13.8 | 8.0 | 16.3 |
| SHF 20G | 19.2 | 16.5 | 16.0 | 24.3 | 24.9 | 27.5 | 15.9 | 32.4 |
| SHF 35G | 28.6 | 24.5 | 23.7 | 36.1 | 36.9 | 40.8 | 23.7 | 48.1 |
| SHF 50G | 35.6 | 30.4 | 29.5 | 45.0 | 46.0 | 50.8 | 29.5 | 59.8 |
| SHF 70G | 55.4 | 47.4 | 45.9 | 70.0 | 71.6 | 79.1 | 45.9 | 93.2 |

| Capacity Selection Table (2/4) | | | | | | | | |
|---|---|---|---|---|---|---|---|---|
| Valve Model | Nominal Cooling Capacity [kW] (condition 2) - ΔP: 0.1 bar | | | | | | | |
| | R1234yf | R1234ze | R454B | R454C | R455A | R452A | R448A | R449A |
| SHF 4G | 2.1 | 2.0 | 4.1 | 2.6 | 2.7 | 2.5 | 3.0 | 2.9 |
| SHF 7G | 4.3 | 4.2 | 8.5 | 5.4 | 5.6 | 5.1 | 6.1 | 6.1 |
| SHF 13G | 6.7 | 6.6 | 13.4 | 8.5 | 8.7 | 8.0 | 9.6 | 9.5 |
| SHF 20G | 13.3 | 13.1 | 26.6 | 16.9 | 17.4 | 16.0 | 19.1 | 18.9 |
| SHF 35G | 19.7 | 19.5 | 39.5 | 25.0 | 25.8 | 23.8 | 28.3 | 28.1 |
| SHF 50G | 24.5 | 24.3 | 49.2 | 31.2 | 32.1 | 29.6 | 35.2 | 34.9 |
| SHF 70G | 38.2 | 37.8 | 76.6 | 48.6 | 50.0 | 46.2 | 54.9 | 54.4 |

## CAPACITY TABLES AT CONDITION 2 [ΔP: 0.2 BAR]

| Capacity Selection Table (3/4) | | | | | | | | |
|---|---|---|---|---|---|---|---|---|
| Valve Model | Nominal Cooling Capacity [kW] (condition 2) - ΔP: 0.2 bar | | | | | | | |
| | R407C[2)] | R404A/R507 | R134a | R410A | R290 | R1270 | R600a | R32 |
| SHF 4G | 4.2 | 3.6 | 3.5 | 5.4 | 5.5 | 6.0 | 3.5 | 7.1 |
| SHF 7G | 8.7 | 7.5 | 7.2 | 11.0 | 11.3 | 12.4 | 7.2 | 14.7 |
| SHF 13G | 13.7 | 11.7 | 11.3 | 17.3 | 17.7 | 19.5 | 11.3 | 23.0 |
| SHF 20G | 27.2 | 23.3 | 22.6 | 34.4 | 35.2 | 38.9 | 22.6 | 45.8 |
| SHF 35G | 40.4 | 34.6 | 33.5 | 51.1 | 52.2 | 57.7 | 33.5 | 68.0 |
| SHF 50G | 50.3 | 43.1 | 41.7 | 63.6 | 65.0 | 71.9 | 41.7 | 84.6 |
| SHF 70G | 78.3 | 67.1 | 65.0 | 99.0 | 101.3 | 111.9 | 64.9 | 131.8 |

| Capacity Selection Table (4/4) | | | | | | | | |
|---|---|---|---|---|---|---|---|---|
| Valve Model | Nominal Cooling Capacity [kW] (condition 2) - ΔP: 0.2 bar | | | | | | | |
| | R1234yf | R1234ze | R454B | R454C | R455A | R452A | R448A | R449A |
| SHF 4G | 2.9 | 2.9 | 5.9 | 3.7 | 3.8 | 3.5 | 4.2 | 4.2 |
| SHF 7G | 6.0 | 5.9 | 12.0 | 7.6 | 7.9 | 7.3 | 8.6 | 8.6 |
| SHF 13G | 9.4 | 9.3 | 18.9 | 12.0 | 12.3 | 11.4 | 13.5 | 13.4 |
| SHF 20G | 18.8 | 18.6 | 37.6 | 23.9 | 24.6 | 22.7 | 27.0 | 26.7 |
| SHF 35G | 27.9 | 27.6 | 55.9 | 35.4 | 36.5 | 33.7 | 40.0 | 39.7 |
| SHF 50G | 34.7 | 34.3 | 69.6 | 44.1 | 45.4 | 41.9 | 49.8 | 49.4 |
| SHF 70G | 54.1 | 53.4 | 108.3 | 68.7 | 70.7 | 65.3 | 77.6 | 77.0 |

**Note:** 1) The selection capacity of the four-way valve for R32 systems should be ≥60%. It is not recommended to use the fourway valve in systems with a capacity less than 60% of the nominal capacity. When used in R32 systems, it is essential to ensure the reliability of low-pressure commutation under extreme conditions.

# 4 WAY REVERSING VALVE

## DIMENSIONS - VALVES

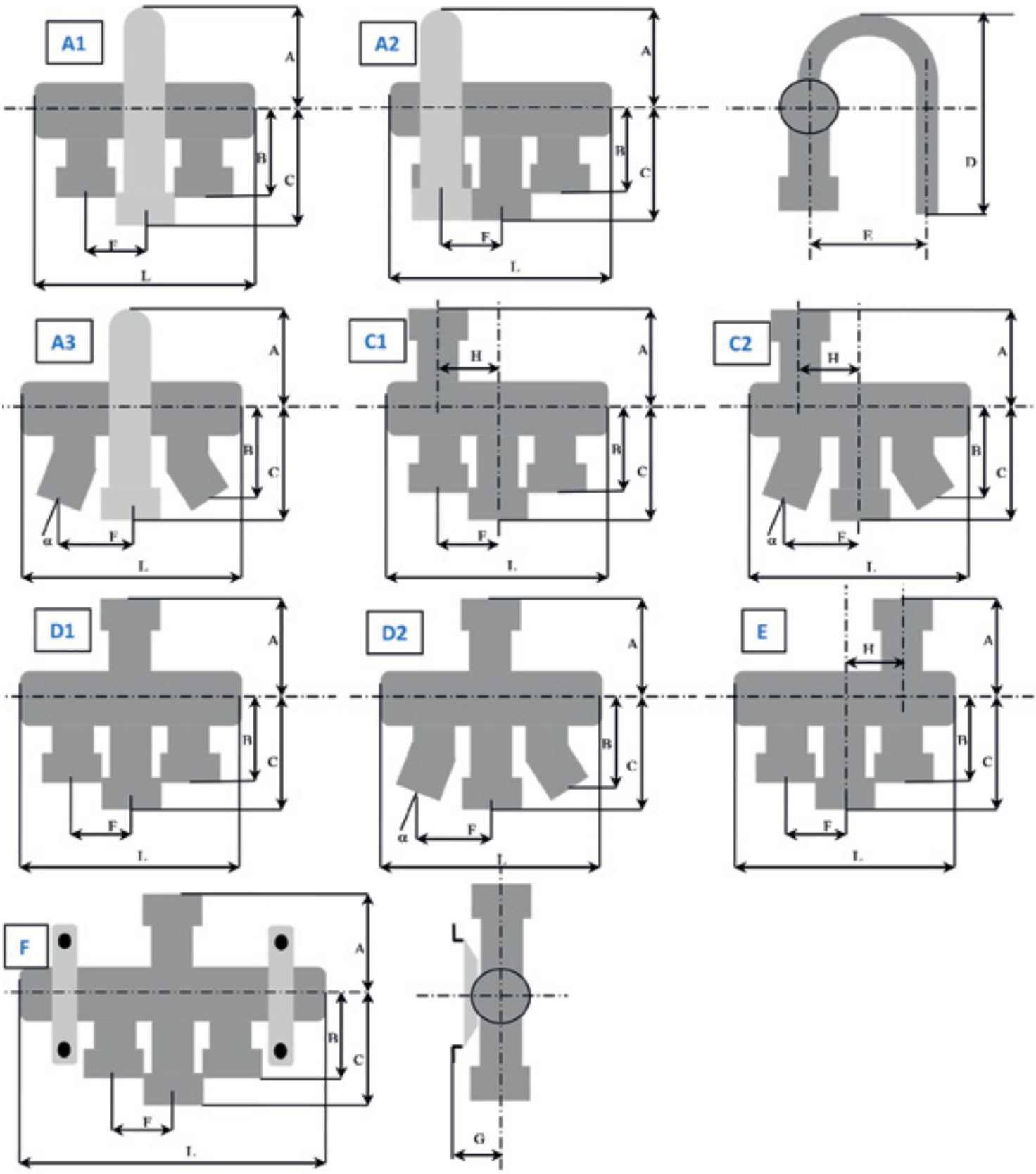

# 4 WAY REVERSING VALVE

## TABLE 3: DIMENSIONS AND WEIGHTS

| Dimensions - Valves | | | | | | | | | | | | |
|---|---|---|---|---|---|---|---|---|---|---|---|---|
| Valve Model | Valve Style | L | A | B | C | D | E | F | G | H | Angle α | Weight |
| | | [mm] | [mm] | [mm] | [mm] | [mm] | [mm] | [mm] | [mm] | [mm] | [°] | [kg] |
| SHF(G)-4H-23U-AE | A1 | 92 | 43 | 50 | 62 | 105 | 43 | 12 | - | - | - | 0.15 |
| SHF(G)-7H-34U-AE | A1 | 110.3 | 51 | 50 | 62 | 113 | 52 | 16 | - | - | - | 0.2 |
| SHF(G)-13H-45-E | D1 | 131.5 | 52 | 50 | 62 | - | - | 20 | - | - | - | 0.24 |
| SHF-20D-46Gxx | D1 | 184.6 | 67 | 81 | 93 | - | - | 28.6 | - | - | - | 0.52 |
| SHF-20D-47Gxx | D1 | 184.6 | 67 | 81 | 93 | - | - | 28.6 | - | - | - | 0.52 |
| SHF-35B-67Gxx | D1 | 208.6 | 78.2 | 82.3 | 95.3 | - | - | 33 | - | - | - | 0.84 |
| SHF-35B-79Gxx | D1 | 208.6 | 78.2 | 84 | 97 | - | - | 33 | - | - | - | 0.84 |
| SHF-50-79Gxx | D1 | 230.6 | 86.1 | 90.8 | 103.6 | - | - | 37 | - | - | - | 0.96 |
| SHF(L)-70-810Gxx | D1 | 290 | 111 | 117 | 131 | - | - | 46 | - | - | - | 2.48 |
| SHF(L)-70-910Gxx | D1 | 290 | 115 | 117 | 131 | - | - | 46 | - | - | - | 2.48 |
| SHF(L)-70-911Gxx | D1 | 290 | 115 | 122 | 136 | - | - | 46 | - | - | - | 2.48 |

# 4 WAY REVERSING VALVE

## TABLE 4: ELECTRICAL COILS

| Coil Characteristics | | | | | | | | | | | | |
|---|---|---|---|---|---|---|---|---|---|---|---|---|
| Coil Model [1] | Winding Code | Part Number | Electrical Function/ Connection Type | Cable Length | Power Supply | Rated Voltage | Power Consumption AC 50Hz | Power Consumption AC 60Hz | Power Consumption DC | Protection Clas | Insulat. Class | Max. Op. Temp. |
| | | | | [mm] | [-] | [V] | [W] | [W] | [W] | [-] | [-] | [°C] |
| SQ-A37024-000004 | SHF-4-10L25 | 10805357502 | Lead Wires | 500 | AC | 24 | 4.5 | 3.5 | - | IP54 | F[2] | 155 |
| SQ-A37100-000001 | SHF-4-10L21 | 10805357602 | Lead Wires | 500 | AC | 100 | 4.5 | 3.5 | - | | | |
| SQ-A37115-000013 | SHF-4-10L24 | 10805358302 | Lead Wires | 500 | AC | 115 | 4.5 | 3.5 | - | | | |
| SQ-A37200-000001 | SHF-4-10L22 | 10805357702 | Lead Wires | 500 | AC | 200 | 4.5 | 3.5 | - | | | |
| SQ-A3720D-000001 | SHF-4-10L34 | 10805357902 | Lead Wires | 500 | AC | 208-230 | / | 4.5 | - | | | |
| SQ-A37220-000001 | SHF-4-10L17 | 10805341402 | Lead Wires | 500 | AC | 220 | 6 | 5.0 | - | | | |
| SQ-A3722G-000001 | SHF-4-10L3 | 10805341302 | Lead Wires | 500 | AC | 220-240 | 4.5 | 3.5 | - | | | |
| SQ-A3726H-000003 | SHF-4-10L26 | 10805359202 | Lead Wires | 500 | AC | 265-277 | 4.5 | 3.5 | - | | | |
| SQ-A3722G-000057 | SHF-4-10L3 | 10805349102 | Lead Wires | 1500 | AC | 220-240 | 4.5 | 3.5 | - | | | |
| SQ-A37115-000028 | SHF-4-10L24 | 10805372902 | Lead Wires | 1500 | AC | 115 | 4.5 | 3.5 | - | | | |
| SQ-A37024-000001 | SHF-4-10L25 | 10805355602 | Lead Wires | 1550 | AC | 24 | 4.5 | 3.5 | - | | | |
| SQ-A5022G-000001 | SQ-A5022G | 10805356002 | Spade (Fast-on) [3] | - | AC | 220-240 | 4.5 | 3.5 | - | IP00 | F | 155 |
| SQ-A5011A-000001 | SQ-A5011A | 10805355902 | Spade (Fast-on) [3] | - | AC | 110-120 | 4.5 | 3.5 | - | | | |
| SQ-A50024-000001 | SQ-A50024 | 10805355802 | Spade (Fast-on) [3] | - | AC | 24 | 4.5 | 3.5 | - | | | |
| SQ-D44 012-00 00015) | SHF-4-10FA8 | 10805231802 | Spade (Fast-on) [3] | - | DC | 12 | - | - | 10 | | | |
| SQ-D44 024-00 00015) | SHF-4-10FA9 | 10805070102 | Spade (Fast-on) [3] | - | DC | 24 | - | - | 11 | | | |
| SQ-A27 100-00 0001 | SQ-A27100 | 10805063202 | Bi-stable/Lead W. | 500 | AC | 100 | 18 | 18 | - | IP54 | B | 130 |
| SQ-A27 200-00 0001 | SQ-A27200 | 10805063802 | Bi-stable/Lead W. | 500 | AC | 200 | 18 | 18 | - | | | |
| SQ-A27 20K-00 0001 | SQ-A2720K | 10805222902 | Bi-stable/Lead W. | 500 | AC | 200-240 | 18 | 18 | - | | | |
| SQ-D27 012-00 0001 | SQ-D27012 | 10805069302 | Bi-stable/Lead W. | 500 | DC | 12 | - | - | 20 | | | |

**Note:** Max ambient temperature up to + 50°C
1) Every coil is applicable to all above specified valve models
2a) SQ-A37: insulation class according to UL is "B". Max Operating temperature: +130°C
2b) SQ-A37: insulation class according to VDE is "F". Max Operating temperature: +155°C
3) Wire Harness for coil with Fast-on connector available as accessory
4) SQ-A27 coils can be used only with SHF valves from size 3 to size 100
5) SQ-D44 cannot be used in combination with SHF valves installed in systems operating with A2L and A3 refrigerants.

## ACCESSORY

| Wire Harness | | |
|---|---|---|
| Model | Part Number | Cable Length [mm] |
| SQ-000000-090028 | 20805136301 | 1200 |
| SQ-000000-090029 | 20805149201 | 2000 |

# 4 WAY REVERSING VALVE

## DIMENSIONS - COILS

Coils with Lead Wires (SQ-A37 Series)

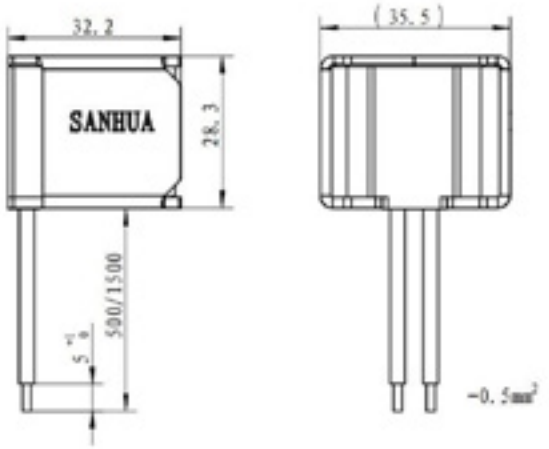


Bistable Coils (SQ-A/D27 Series)

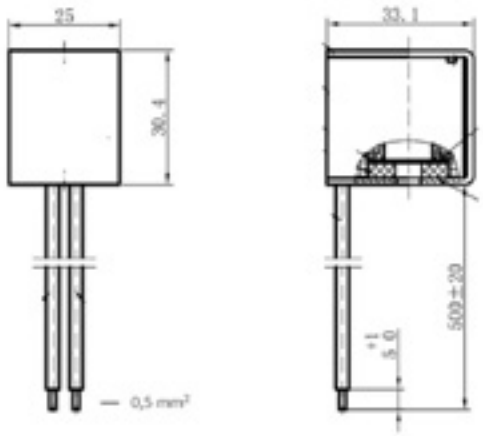


Coils with Spade Connections (SQ-D44 Series)

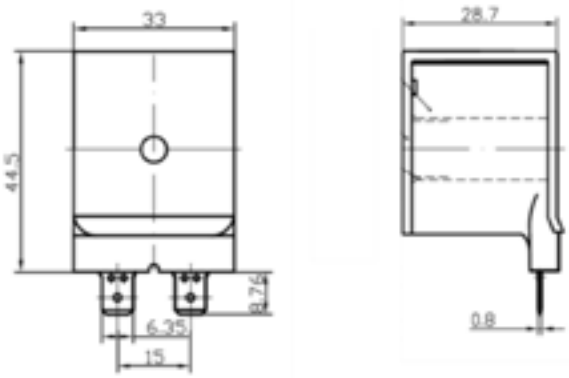


Coils with Spade Connections (SQ-A50 Series)

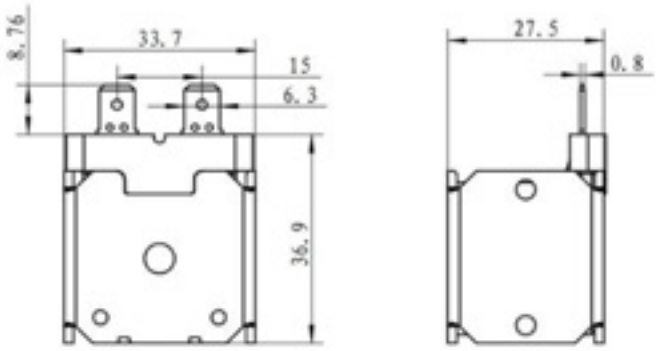


Wire Harness (SQ-000000-0900xx)

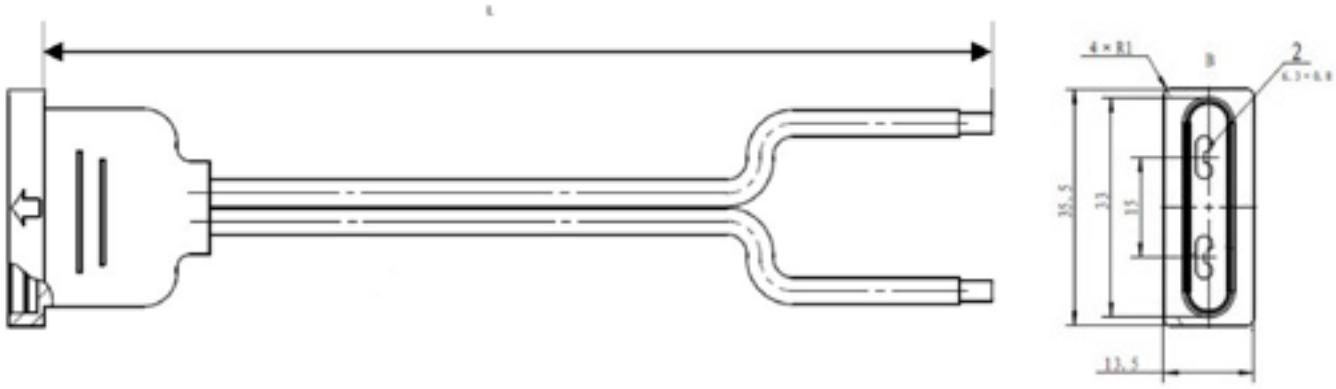

# SANHUA'S GLOBAL FOOTPRINT

**SANHUA** INTERNATIONAL
**info@sanhuaeurope.com**

**15 PRODUCTION BASES** *at China, India, Mexico, U.S, Poland, Turkey*

**38,000 EMPLOYEES** *globally*

*More than* **4000 PATENTS**

**37 SALES COMPANIES** *globally*

# SANHUA


**sanhuaeurope.com**

**SANHUA** INTERNATIONAL

**info@sanhuaeurope.com**


innovating
TOGETHER